DISC BRAKE

CATALOG ▸ 2020

ADVICS
For Safety Evolution

Disc Brake Pads

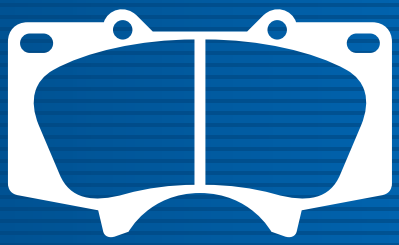

Brake Caliper

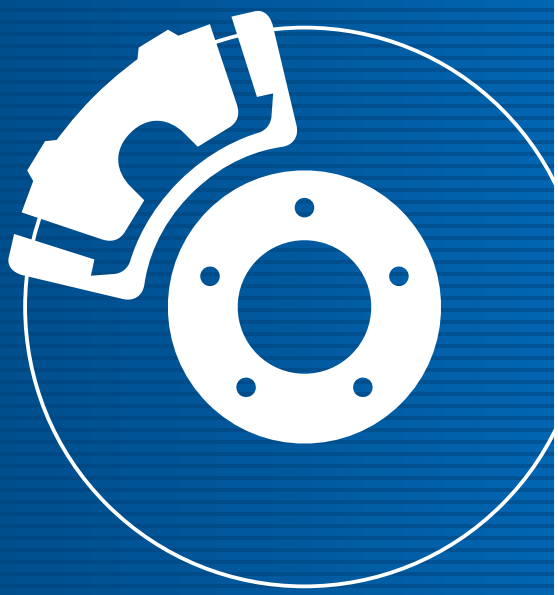

Piston

Seal Kit

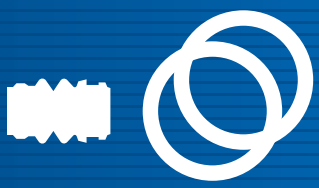

ADVICS
For Safety Evolution

Brake Booster

Brake Master Cylinder

Brake Wheel Cylinder

Brake Caliper

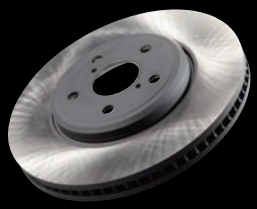

Brake Disc

Brake Pad

Evolving Brake Systems

To Enhance Safety and Comfort

Whatever the conditions, ADVICS brake products provide consistent braking performance. Design and manufacturing under OE original equipment specifications assures a superior, unparalleled product.

DISC BRAKE CATALOG

Pad Replacement Notice 2

IMPORTANT NOTICE 4

Disc Brake Catalog 5

- 6 TOYOTA / LEXUS
- 40 NISSAN
- 58 MITSUBISHI
- 78 MAZDA
- 93 HONDA
- 103 SUBARU
- 113 DAIHATSU
- 121 SUZUKI
- 126 ISUZU
- 135 HINO

Catalog for Disc Pad Figure 139

Cross Reference List 227

- 228 Multi Disc Pad Makers Products Cross Reference Number List
- 236 Genuine No.→ADVICS No.

WARNING!! Your brake

- Noise when pressing the brake pedal.
- Brake fluid loss without a leak.
- Brakes becoming less effective.

Are your brakes okay?

Brake pads are wearing parts

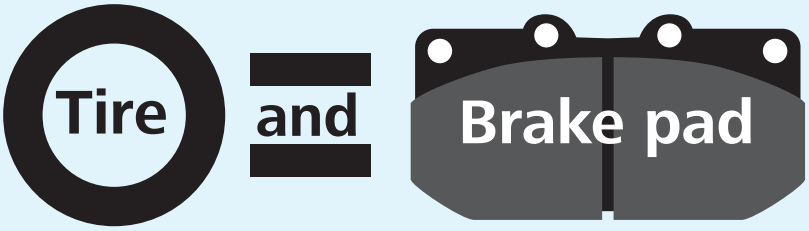

Replacement are similar.

Safe

Drive safely by inspecting your brake pads early!

Brake replacement timing will differ depending on how often they are used, but about every 30,000km they should be changed, similar to the tire replacement cycle.

Replace

Replace your brake pads early!

When the friction material of the brake pad has gone down around 5 or 6 mm the rate of wear accelerates drastically due to increasing friction heat.

Danger

Replace your brake pads today!

When the drag surface is 3 mm or less your car is in danger. Continuing to drive in this state may lead to rotor damage (a major repair) or serious accident.

Wear Condition Guidelines

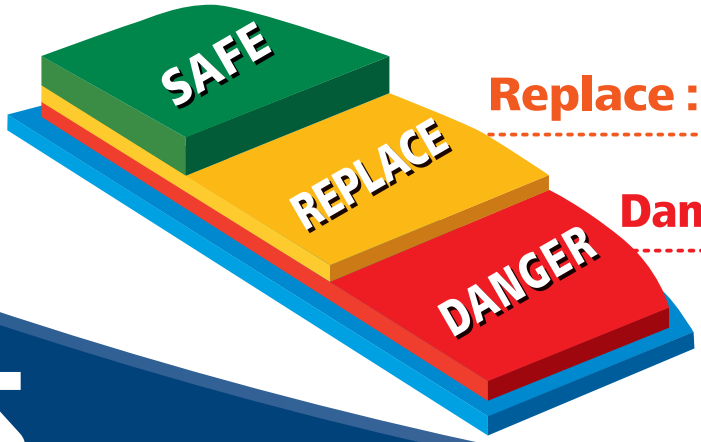

Replace : 5 - 6mm or less

Danger : 3mm or less

ADVICS
For Safety Evolution

Everyday

pads are wearing out!

If you have any of the symptoms on the left, get inspected right away!

Taking action and getting your brakes checked early can prevent serious accidents.

cycles

* May differ depending on use.

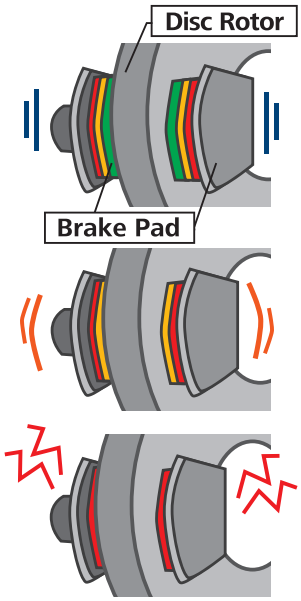

*Example diagram

Brake Pad

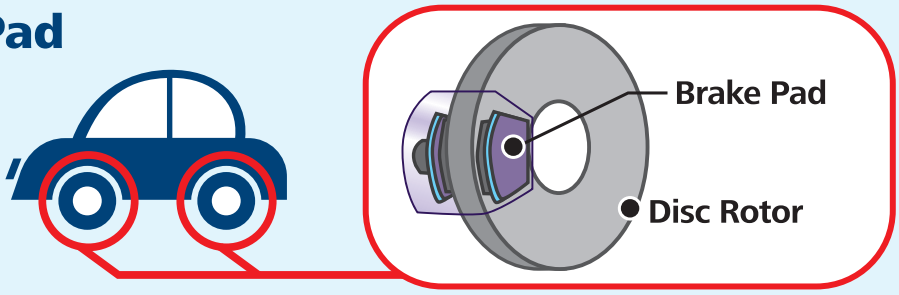

■The brake pad pinches the disc rotor and stops the car with the friction generated. The pad is a wearing part that slowly wears down through the friction and heat created through this process.

■As the pad thins the rate at which it does so increases. Continuing to use the pad reduces the responsiveness of the brake and can lead to damage such as scratching the rotor. When replacement is recommended, make sure that you replace your brake pads for safetyís sake.

Brake Pad Stay safe with diligent inspection!

Tips for Routine Checking

Danger! These symptoms require attention!	・Brake fluid loss without a leak. ・Brakes become less effective. ・Screeching when pressing the brake pedal.
Check the source!	・Brake pad wear.
Leaving it may result in…	・Brake malfunction leading to serious accident. ・Rotor damage.

attention is so important. Check early and stay safe.

IMPORTANT NOTICE

The purpose of this catalog is to furnish our customers with as complete a listing of their disc brake pad requirements as possible.

All listings, applications or interchanges contained in this catalog are based on the latest information available at the time of printing. Every effort has been made to ensure that the information contained in this catalog is correct, but we do not assume any responsibility for errors which may occur.

All references to manufactures names or part numbers are only used as a guide when ordering disc brake pad.

Disc Brake Catalog

SPECIFIC INDEX FOR TOYOTA

CAR NAME	PAGE
ALLION/ PREMIO アリオン/ プレミオ	8
ALPHARD/ VELL FIRE アルファード/ ヴェルファイア	8
ALPHARD HV アルファード HV	8
ALTEZZA アルテッツァ	8
ALTEZZA GITA アルテッツァ ジータ	8
AQUA アクア	8
ARISTO アリスト	8
AURIS オーリス	8
AVALON アバロン	9
AVENSIS SEDAN アベンシス セダン	9
AVENSIS VERSO アベンシス ヴァーソ	9
AVENSIS WAGON アベンシス ワゴン	9
bB/ bB Open Deck	9
BELTA ベルタ	9
BLADE ブレイド	9
BREVIS ブレビス	9
CALDINA WAGON カルディナ ワゴン	9
CALDINA VAN カルディナ バン	10
CAMRY カムリ	10
CAMRY Hybridカムリハイブリッド	10
CAMI キャミ	11
CAMRY GRACIA カムリグラシア	11
CARINA カリーナ	11
CARINA ED カリーナ	11
CELICA セリカ	12
CELSIOR セルシオ	12
CENTURY センチュリー	12
CHASER チェイサー	12
COASTER コースター	13
COASTER HYBRID コースター HV	13
COROLLA/ AXIO/ SPRINTER カローラ/ アクシオ/ スプリンター	13
COROLLA/ AXIO/ FIELDER カローラ/ アクシオ/ フィールダー	14
COROLLA/ FIELDER/ SPRINTER WAGON カローラ/ フィールダー/ スプリンター ワゴン	14
COROLLA/ SED/ WG カローラ/ セダン/ ワゴン	14
COROLLA/ SPRINTER VAN カローラ/ スプリンター バン	14
COROLLA SPORT カローラスポーツ	14
COROLLA Ⅱ カローラ Ⅱ	14
COROLLA LEVIN/ CERES/ TRUENO/ MARINO カローラ レビン/ セレス/ トレノ/ マリノ	14
COROLLA SPACIO カローラ スパシオ	15
COROLLA RUNX/ ALLEX カローラ ランクス/ アレックス	15
COROLLA RUMION カローラ ルミオン	15
COROLLA VERSO(EU) カローラ バーソ(EU)	15
CORONA EXiV コロナ エクシブ	15
CORONA/ CORONA PREMIO コロナ/ コロナ プレミオ	15
CROWN/ MAJESTA/ ROYAL/ ATHLETE クラウン/ マジェスタ/ ロイヤル/ アスリート	16
CROWN/ ESTATE WAGON クラウン/ エステート ワゴン	17
CROWN VAN クラウン バン	17
CROWN COMFORT クラウン コンフォート	17
CROWN/ CROWN COMFORT (Taxi) クラウン/ クラウン コンフォート (タクシー)	17
CROWN COMFORT (Training Vehicle) クラウン コンフォート (教習車)	18
CURREN カレン	18

CAR NAME	PAGE
CYNOS サイノス	18
CRESTA クレスタ	18
DELIBOY デリボーイ	19
DUET デュエット	19
DYNA/ TOYOACE (YY・YU2##, 5#, 6#, 7#) ダイナ/ トヨエース (YY・YU2##, 5#, 6#, 7#)	19
DYNA/ TOYOACE (YY・LY1##, 2##, 5#, 6#) ダイナ/ トヨエース (YY・LY1##, 2##, 5#, 6#)	19
DYNA/ TOYOACE (RZY・TRY・KDY2##) ダイナ/ トヨエース (RZY・TRY・KDY2##)	19
DYNA/ TOYOACE (BU6#, 7#, 8#) ダイナ/ トヨエース (BU6#, 7#, 8#)	20
DYNA/ TOYOACE (BU6#, 7#, 8#, 9#) ダイナ/ トヨエース(BU6#, 7#, 8#, 9#)	20
DYNA/ TOYOACE (WU7#, 8#, 9#) ダイナ/ トヨエース (WU7#, 8#, 9#)	20
DYNA/ TOYOACE (RZU1##) ダイナ/ トヨエース (RZU1##)	20
DYNA/ TOYOACE (BU1##, 3##) ダイナ/ トヨエース (BU1##, 3##)	20
DYNA/ TOYOACE (BU1##, 2##) ダイナ/ トヨエース (BU1##, 2##)	20
DYNA/ TOYOACE (XZU・RZU3##) ダイナ/ トヨエース (XZU・RZU3##)	21
DYNA/ TOYOACE (BZU・XZU3##) ダイナ/ トヨエース (BZU・XZU3##)	21
DYNA/ TOYOACE (XZU1##, 3##) ダイナ/ トヨエース (XZU1##, 3##)	22
DYNA/ TOYOACE (XZU4##) ダイナ/ トヨエース (XZU4##)	22
DYNA/ TOYOACE (BU・BZU・XZU4##) ダイナ/ トヨエース (BU・BZU・XZU4##)	22
DYNA/ TOYOACE (TRU3##, 6##, XZU5##, 6##) ダイナ/ トヨエース (TRU3##, 6##, XZU5##, 6##)	23
DYNA/ TOYOACE (XZC6##, 7##) ダイナ/ トヨエース (XZC6##, 7##)	23
DYNA/ TOYOACE HV (XKU3##, 4##, 5##, 6##, 7##) ダイナ/ トヨエース HV (XKU3##, 4##, 5##, 6##, 7##)	23
DYNA/ TOYOACE HV (XKC6##) ダイナ/ トヨエース HV (XKC, 6##)	23
ESTIMA/ ESTIMA T/ L エスティマ/ エスティマ T/ L	23
ESTIMA HYBRID エスティマ HV	24
ESTIMA EMINA/ LUCIDA エスティマ エミーナ/ ルシーダ	24
ESQUIREエスクァイア	24
FJ CRUISER FJクルーザー	24
FUN CARGO ファンカーゴ	24
GAIA ガイア	24
GRANVIA/ GRAND HIACE グランビア/ グランドハイエース	24
HIACE WAGON ハイエース ワゴン	25
HIACE/ REGIUS ACE VAN ハイエース/ レジアスエース バン	25
HIACE REGIUS WAGON/ TOURING HIACE ハイエース レジアス ワゴン/ ツーリング ハイエース	25
HIACE REGIUS VAN ハイエース レジアス バン	25
HIACE COMMUTER ハイエース コミューター	25
HIACE TRUCK ハイエース トラック	26
HILUX ハイラックス	26
HILUX SURF ハイラックス サーフ	26
HARRIER ハリアー	26
HARRIER HV ハリアー HV	27
86	27
4RUNNER	27
IQ	27
ISIS アイシス	27
IPSUM イプサム	27
IST イスト	27
JPN TAXI ジャパンタクシー	27
KLUGER L/ V クルーガー L/ V	27
KLUGER HV クルーガー HV	28
LAND CRUISER ランドクルーザー	28
LAND CRUISER PRADO ランドクルーザー プラド	28

CAR NAME	PAGE
LITE/ TOWN ACE NOAH ライト/ タウンエース ノア	29
LITE/ TOWN ACE VAN ライト/ タウンエース バン	29
LITE/ TOWN ACE Truck ライト/ タウンエース トラック	30
MARKⅡ マークⅡ	30
MARKⅡ WAGON/ MARKⅡBLIT マークⅡ ワゴン/ マークⅡブリット	31
MARKⅡ VAN マークⅡバン	31
MARK X マーク X	31
MARK X ZiO マーク X ZiO	31
MEGA CRUISER メガクルーザー	31
MIRAI ミライ	31
MR 2	31
MR-S	32
NADIA ナディア	32
NOAH/ VOXY ノア/ ヴォクシー	32
OPA オーパ	32
PASSO パッソ	32
PASSO SETTE パッソ セッテ	32
PICNIC ピクニック	32
PIXIS EPOC ピクシス エポック	32
PIXIS SPACE ピクシス スペース	32
PIXIS VAN/ Truck ピクシス バン/ トラック	32
PIXIS MEGA ピクシス メガ	32
PLATZ プラッツ	33
PORTE / SPADE ポルテ / スペイド	33
PRIUS プリウス	33
PRIUS (EU Application) プリウス	33
PRIUS PHV プリウスPHV	33
PRIUSα プリウスα	33
PROGRES プログレ	33
PRONARD プロナード	33
PROBOX プロボックス	33
QUICK DELIVERY/ URBAN SUPPORTER クイックデリバリー/ アーバンサポーター	33
RACTIS ラクティス	34
RAUM ラウム	34
RAV4	34
RAV4L EV	34
RUSH ラッシュ	34
SAI サイ	34
SCEPTER セプター	34
SERA セラ	35
SIENNA シエナ	35
SIENTA シエンタ	35
SOARER ソアラ	35
SPARKY スパーキー	35
SPADE スペイド	35
SPRINTER CARIB スプリンター カリブ	35
STARLET スターレット	35
SUPRA スープラ	35
SUCCEED VAN/ WAGON サクシード バン/ ワゴン	36

CAR NAME	PAGE
TERCEL/ CORSA ターセル/ コルサ	36
T100	36
VANGUARD ヴァンガード	36
VEROSSA ヴェロッサ	36
VOLTZ ヴォルツ	36
VISTA/ VISTA ARDEO ビスタ/ ビスタ アルディオ	36
VITZ ヴィッツ	37
WISH ウィッシュ	37
WILL CYPHA WILL サイファ	37
WILL VI	37
WILL VS	37
WINDOM ウインダム	37
YARIS ヤリス	38

LEXUS

CAR NAME	PAGE
CT200h	38
GS250/ 300/ 350/ 430/ 460	38
GS450h	38
GX400/ 460	38
HS250h	38
IS250/ 300/ 350/ IS F	38
IS250 AWD	39
IS250C	39
LS460	39
LS600h/ 600hL	39
LX450	39
LX450D/ 460/ 570	39
NX200t	39
NX300h	39
RC300	39
RC350	39
RX200	39
RX270/ 350/ 450h	39
RX300	39
SC430	39
UX200	39
UX250h	39

TOYOTA

cc	Year	Body Type	Front					Rear				
			Disc Pad	Seal Kit	Caliper		Piston	Disc Pad	Seal Kit	Caliper		Piston
					R	L				R	L	
ALLION/ PREMIO アリオン/ プレミオ												
1500	01.12-07.05	NZT240	**A1N068**	**SP409**	A5R016	A5L016	A9N056	**Drum**				
	07.06-	NZT260 (TypeA)	**A1N155**	**SP434**	A5R009	A5L009	A9N087	**Drum**				
	07.06-	NZT260 (TypeB)	**A1N128**	**SP442**	A5R107	A5L107	A9N055	**Drum**				
1800	01.12-07.05	ZZT240	**A1N068**	**SP409**	A5R016	A5L016	A9N056	**Drum**				
	01.12-07.05	ZZT245	**A1N065**	**SP427**	A5R012	A5L012		**Drum**				
	07.06-	ZRT260, 265	**A1N128**	**SP442**	A5R107	A5L107	A9N055	**Drum**				
2000	01.12-07.06	AZT240	**A1N065**	**SP427**	A5R012	A5L012		**Drum**				
	08.01-	ZRT261	**A1N128**	**SP442**	A5R107	A5L107	A9N055	**Drum**				
ALPHARD/ VELL FIRE アルファード/ ヴェルファイア												
2400	02.05-08.08	ANH10W, 15W	**A1N106**	**SP443**			A9N078	**A2N069**	**MP-94**	A5R011	A5L011	A9N086
	08.05-	ANH20W, 25W	**A1N139**	**A-735P**				**A2N191**				
2500	15.01-	AYH30W, AGH35W	**A1N139**	**A-735P**								
3000	02.05-08.08	MNH10W, 15W	**A1N106**	**SP443**			A9N078	**A2N069**	**MP-94**	A5R011	A5L011	A9N086
3500	08.05-	GGH20W, 25W	**A1N139**	**A-735P**				**A2N191**				
	15.01-	GGH35W	**A1N139**	**A-735P**					**SP482**			
	17.05-18.01	AGH3#, AYH30, GGH30	**A1N139**	**SP482**								
	18.10-	AGH3#, AYH30, GGH30	**A1N191**	**SP482**								
ALPHARD HV アルファード HV												
2400	03.07-08.03	ATH10W	**A1N106**	**SP443**			A9N078	**A2N069**	**MP-94**	A5R011	A5L011	A9N086
	11.10-	ATH20W	**A1N139**	**A-735P**				**A2N191**				
ALTEZZA アルテッツァ												
2000	98.10-05.07	SXE10, GXE10 (17inch)	**A1N056**	**MP-77**				**A2N099**	**SP441**			A9N066
	98.10-01.05	SXE10, GXE10	**A1N041**	**SP440**			A9N065	**A2N099**	**MP-87**	A5R024	A5L024	
	01.05-05.07	SXE10, GXE10	**SN680**	**SP440**			A9N065	**A2N099**	**MP-87**			
ALTEZZA GITA アルテッツァ ジータ												
2000	01.07-05.07	GXE10W (17inch)	**A1N056**	**MP-77**				**A2N099**	**SP441**			A9N066
	01.07-05.07	GXE10W	**SN680**	**SP440**			A9N065	**A2N099**	**SP441**			
	02.01-05.07	GXE15W (16inch)	**A1N056**	**MP-77**				**A2N099**	**SP441**			
	02.01-03.08	GXE15W	**A1N041**	**SP440**				**A2N099**	**SP441**			
3000	01.07-05.07	JCE10W	**A1N056**	**MP-77**				**A2N099**	**SP441**			
	01.07-05.07	JCE15W	**A1N056**	**MP-77**				**A2N099**				
AQUA アクア												
1500	11.12-	NHP10	**A1N192**	**SP434**			A9N084	**Drum**				
ARISTO アリスト												
3000	91.10-93.08	JZS147 (V)	**A1N054**	**MP-47**				**A2N059**	**MP-48**			
	93.08-97.08	JZS147 (V)	**A1N056**	**MP-77**				**A2N059**	**MP-66**			
	91.10-95.08	JZS147 (Q)	**A1N041**	**MP-77**				**A2N084**	**MP-48**			
	95.08-97.08	JZS147 (Q)	**A1N041**	**MP-77**				**A2N059**	**MP-66**			
	97.08-05.01	JZS160, 161	**A1N056**	**MP-77**	A5R022	A5L022	A9N079	**A2N099**	**MP-80**			
4000	92.10-95.08	UZS143	**A1N056**	**MP-77**				**A2N059**	**MP-48**			
	95.08-97.08	UZS143	**A1N056**	**MP-77**				**A2N059**	**MP-66**			
AURIS オーリス												
1200	15.03-	NRE185	**A1N128**	**SP442**	A5R107	A5L107	A9N055	**A2N232**	**TP-111**			
1500	06.10-	NZE151H, 154H	**A1N128**	**SP442**	A5R107	A5L107	A9N055	**A2N232**	**TP-111**			
	12.08-	NZE181H	**A1N128**	**SP442**	A5R107	A5L107	A9N055	**A2N196**	**TP-112**			
	12.08-	NZE184H	**A1N128**	**SP442**	A5R107	A5L107	A9N055		**TP-111**			
1800	06.10-	ZRE152H, 154H	**A1N128**	**SP442**	A5R107	A5L107	A9N055	**A2N232**	**TP-111**			
	12.08-	ZRE186H(RS)	**A1N129**	**SP135**			A9N052		**TP-111**			
	12.08-	ZRE186H, 180G	**A1N128**	**SP442**	A5R107	A5L107	A9N055		**TP-111**			

※TypeA/ B : Welcab Series

cc	Year	Body Type	Front					Rear				
			Disc Pad	Seal Kit	Caliper		Piston	Disc Pad	Seal Kit	Caliper		Piston
					R	L				R	L	
AVALON アバロン												
3000	95.03-97.09	MCX10	**A1N041**	**C-322P**				**A2N057**				
	97.09-00.02	MCX10	**A1N097**	**A-678P**				**A2N057**				
AVENSIS SEDAN アベンシス セダン												
2000	03.10-08.11	AZT250, 255	**SN933P**					**A2N191**				
2400	05.06-08.11	AZT251	**SN933P**					**A2N191**				
AVENSIS VERSO アベンシス ヴァーソ												
2000	02.06-09.12	ACM20	**A1N105**	**A-667P**				**A2N069**	**SP447**	A5R106	A5L106	A9N061
AVENSIS WAGON アベンシス ワゴン												
2000	03.10-08.11	AZT250W, 255W	**SN933P**					**A2N191**				
2400	05.06-08.11	AZT251W	**SN933P**					**A2N191**				
	12.03-	ZRT272W										
bB/bB Open Deck												
1300	00.01-04.11	NCP30	**A1N068**	**SP424**	A5R015	A5L015	A9N059	**Drum**				
	04.11-05.12	NCP30	**SN130P**	**SP424**	A5R015	A5L015	A9N059	**Drum**				
	06.01-10.10	QNC20, 25	**SN949P**	**TP-80**				**Drum**				
	10.10-	QNC20, 25	**SN949P**	**TP-115**				**Drum**				
1500	00.01-04.11	NCP31	**A1N068 ※1**	**SP424**	A5R015	A5L015	A9N059	**Drum**				
	04.11-05.12	NCP31	**SN130P**	**SP424**	A5R015	A5L015		**Drum**				
	03.05-04.09	NCP31 (VSC)	**A1N068 ※1**	**SP432**	A5R018	A5L018	A9N058	**Drum**				
	04.09-05.12	NCP31 (VSC)	**SN130P**	**SP432**	A5R018	A5L018	A9N058	**Drum**				
	01.06-03.03	NCP34	**A1N068**	**SP424**	A5R015	A5L015		**Drum**				
	00.01-04.11	NCP35	**A1N068**	**SP424**	A5R015	A5L015		**Drum**				
	04.11-05.12	NCP35	**SN130P**	**SP424**	A5R015	A5L015		**Drum**				
	06.01-10.10	QNC21	**SN949P**	**TP-80**				**Drum**				
	10.10-	QNC21	**SN949P**	**TP-115**				**Drum**				
BELTA ベルタ												
1000	05.11-	KSP92	**A1N155**	**SP434**	A5R009	A5L009		**Drum**				
1300	05.11-	SCP92, NCP96	**A1N155**	**SP434**	A5R009	A5L009		**Drum**				
	05.11-	SCP92 (VSC)	**SN939**	**SP455**			A9N088	**SN938P**	**TP-99A**			
BLADE ブレイド												
2400	06.12-	AZE154H, 156H	**A1N128**	**SP135**			A9N052	**A2N232**	**TP-111**			
3500	07.08-	GRE156H	**A1N129**	**SP135**	A5R043	A5L043	A9N052	**A2N232**	**TP-111**			
BREVIS ブレビス												
2500	01.05-07.06	JCG10	**SN680**	**SP440**			A9N065	**A2N099**	**MP-80**			
	01.10-07.06	JCG15	**A1N041**	**SP440**			A9N065	**A2N099**	**MP-80**			
3000	01.05-07.06	JCG11	**SN680**	**SP440**			A9N065	**A2N099**	**MP-80**			
CALDINA WAGON カルディナ ワゴン												
1800	92.11-96.01	ST190G, AT191G	**A1N048**	**MP-50**			A9N051	**Drum**				
	96.01-97.08	ST190G, AT191G	**A1N048**	**MP-68**			A9N051	**Drum**				
	97.08-02.09	AT211G	**A1N048**	**MP-68**			A9N051	**Drum**				
	02.09-07.06	ZZT241W	**A1N065**	**SP427**	A5R012	A5L012		**A2N066**	**SP463**	A5R019	A5L019	
2000	92.11-96.01	CT190G	**A1N048**	**MP-50**			A9N051	**Drum**				
	96.01-97.08	CT190G	**A1N048**	**MP-68**			A9N051	**Drum**				
	92.11-94.02	ST191G	**A1N048**	**MP-50**				**SN648P**	**A-222P**			
	94.02-96.01	ST191G	**A1N048**	**MP-50**				**A2N094**	**A-222P**			
	96.01-97.08	ST191G	**A1N048**	**MP-68**				**Drum**				
	92.11-94.02	ST195G (CZ, TZ)	**A1N048**	**MP-50**				**SN648P**	**SP467**			
	94.02-96.01	ST195G (CZ, TZ)	**A1N048**	**MP-50**				**A2N094**	**C-222P**			
	96.01-97.08	ST195G (CZ, TZ)	**A1N048**	**MP-68**				**Drum**				

VSC…Vehicle Stability Control
※1 There are cases where it is SN130P depending on the shape of the SIM.

TOYOTA

cc	Year	Body Type	Front					Rear				
			Disc Pad	Seal Kit	Caliper		Piston	Disc Pad	Seal Kit	Caliper		Piston
					R	L				R	L	
CALDINA WAGON カルディナ ワゴン												
	95.02-96.01	ST195G (TZG)	**A1N048**	**MP-50**				**SN648P**	**SP467**			
	96.01-97.08	ST195G (TZG)	**A1N048**	**MP-68**				**A2N094**	**C-222P**			
	97.08-02.09	ST210G (E, G)	**A1N048**	**MP-68**				**Drum**				
	99.12-02.09	ST210G (GT)	**A1N053**	**MP-85**				**A2N094**	**C-438P**			
	97.08-02.09	ST215G (E, G)	**A1N048**	**MP-68**				**Drum**				
	97.08-97.11	ST215G (GT) ST215W	**A1N053**	**MP-62**				**A2N094**	**C-438P**			
	97.11-02.09	ST215G (GT) ST215W	**A1N053**	**MP-85**				**A2N094**	**C-438P**			
	02.09-07.06	AZT241W, 246W	**A1N065**	**SP427**	A5R012	A5L012		**A2N066**	**SP463**	A5R019	A5L019	A9N061
	02.09-07.06	ST246W	**A1N106**	**MP-107**			A9N093	**A2N104**	**MP-100**			
2200	97.08-02.09	CT216G	**A1N048**	**MP-68**			A9N051	**Drum**				
CALDINA VAN カルディナ バン												
1500	92.11-94.05	ET196V	**A1N034**	**MP-20**				**Drum**				
CAMRY カムリ												
1800	90.07-94.06	SV30	**SN641**	**MP-50**				**Drum**				
	94.06-97.11	SV40	**A1N048**	**MP-50**				**Drum**				
	97.11-98.06	SV40	**A1N048**	**MP-68**				**Drum**				
2000	90.07-94.06	CV30(VZ, ZE)	**SN641**	**SP428**				**Drum**				
	92.06-94.06	CV30(ZX, Lumiere)	**SN641**	**SP428**				**SN648P**	**MP-22**			
	90.07-94.06	SV32, 33(ZX, Lumiere)	**SN641**	**SP428**				**SN648P**	**MP-22**			
	92.06-94.06	SV32, 33(ZX Turing Package)	**SN641**	**SP428**				**SN648P**	**SP467**			
	90.07-94.06	SV32, 33 (GT) VZV30, 31	**A1N046**	**SP428**				**SN648P**	**SP467**			
	90.07-94.06	SV35	**SN641**	**SP428**				**SN648P**	**SP467**			
	94.06-97.11	SV41, 42	**A1N048**	**MP-50**			A9N051	**A2N094**	**A-222P**			
	97.11-98.06	SV41, 42	**A1N048**	**MP-68**			A9N051	**A2N094**	**SP456**			
	94.06-97.11	SV43	**A1N048**	**MP-50**			A9N051	**A2N094**	**C-222P**			
	97.11-98.06	SV43	**A1N048**	**MP-68**			A9N051	**A2N094**	**C-222P**			
2200	94.06-97.11	CV40	**A1N048**	**MP-50**			A9N051	**A2N094**	**A-222P**			
	95.01-97.11	CV43	**A1N048**	**MP-50**			A9N051	**A2N094**	**A-222P**			
	97.11-98.06	CV43	**A1N048**	**MP-68**			A9N051	**A2N094**	**C-222P**			
	97.08-	MCV10		**A-678P**			A9N051	**SN648P**	**A-222P**			A9N061
	92.11-96.08	SXV10, 15, 15W	**A1N048**	**MP-50**			A9N092	**SN648P**	**SP467**			
	96.12-99.08	SXV20	**A1N048**	**MP-50**				**SN648P**	**MP-78**			
	99.08-01.09	SXV20	**A1N048**	**MP-50**				**A2N066**	**SP463**			
2400	01.09-06.01	ACV30	**A1N073**	**SP443**	A5R108	A5L108	A9N078	**A2N104**	**MP-100**			
	01.09-06.01	ACV35	**A1N073**	**SP443**	A5R108	A5L108	A9N078	**SN648P**	**SP456**			
	06.01-07.05	ACV40	**A1N154**	**SP135**	A5R008	A5L008		**A2N130**	**SP134**	A5R020	A5L020	A9N085
	07.06-	ACV40	**A1N154**	**SP135**	A5R008	A5L008		**A2N130**	**SP413**	A5R020	A5L020	A9N085
	06.01-09.07	ACV45	**A1N154**	**SP135**	A5R008	A5L008		**A2N104**	**MP-100**			
	09.07-10.12	ACV45	**A1N154**	**SP135**	A5R008	A5L008		**A2N104**	**SP419**			
	10.12-11.08	ACV45	**A1N154**	**SP135**	A5R008	A5L008		**A2N104**	**SP429**			
2500	91.05-94.06	VZV32, 33	**A1N046**	**MP-50**				**SN648P**	**SP467**			
	96.12-99.08	MCV21	**A1N097**	**A-678P**				**SN648P**	**MP-78**			
	99.08-01.09	MCV21	**A1N097**	**A-678P**				**A2N066**	**SP463**			
	11.08-	AVV50	**A1N154**	**SP443**				**A2N130**	**SP416**			A9N085
CAMRY Hybridカムリハイブリッド												
2500	17.06-	AXVH70, AXVH75					A9N055					
	17.09-	ASV70, AXVA70, AXVH71					A9N055					
3500	17.09-	GSV70					A9N055					

cc	Year	Body Type	Front					Rear				
			Disc Pad	Seal Kit	Caliper		Piston	Disc Pad	Seal Kit	Caliper		Piston
					R	L				R	L	
CAMI キャミ												
1300	99.05-05.12	J100E, 102E, 122E	**G1N005**	**SP297**	G5R001	G5L001	G9N002	**Drum**				
CAMRY GRACIA カムリグラシア												
2200	00.03-01.09	SXV20N	**A1N048**	**MP-50**				**A2N066**	**SP463**			
	96.12-99.08	SXV20W	**A1N048**	**MP-50**			A9N051	**SN648P**	**SP467**			
	99.08-01.09	SXV20W	**A1N048**	**MP-50**				**A2N066**	**SP463**			
2500	96.12-99.08	MCV21W	**A1N097**	**A-678P**				**SN648P**	**SP467**			
	99.08-01.09	MCV21W	**A1N097**	**A-678P**				**A2N066**	**SP463**			
	97.06-01.09	MCV25W	**A1N097**	**A-678P**				**SN648P**	**SP467**			A9N062
CARINA カリーナ												
1500	92.08-96.08	AT192 (SX)	**A1N048**	**MP-50**				**Drum**				
	94.08-96.08	AT192(SG 14inch)	**A1N048**	**MP-50**				**Drum**				
	92.08-96.08	AT192	**A1N034**	**MP-20**				**Drum**				
	97.11-01.12	AT212(13inch)	**A1N034**	**MP-65**				**Drum**				
	96.08-01.12	AT212	**A1N048**	**MP-68**				**Drum**				
1600	88.08-92.08	AT175	**A1N038**	**MP-21**				**A2N081**	**SP467**			
	92.08-96.08	AT190 (SXi)	**A1N048**	**MP-50**				**Drum**				
	94.08-96.08	AT190(SGI 14inch)	**A1N048**	**MP-50**				**Drum**				
	92.08-96.08	AT190	**A1N034**	**MP-20**				**Drum**				
	96.08-98.08	AT210	**A1N048**	**MP-68**				**A2N094**	**A-222P**			
	98.08-01.12	AT210	**A1N053**	**MP-62**				**A2N094**	**C-222P**			
1800	92.08-94.08	ST190 (SX, SE, SEEXT)	**A1N048**	**MP-50**			A9N051	**Drum**				
	92.08-94.08	ST190 (SL)	**A1N048**	**MP-50**			A9N051	**SN648P**	**A-222P**			
	94.08-96.08	AT191 (SL)	**A1N048**	**MP-50**			A9N051	**A2N094**	**A-222P**			
	94.08-96.08	AT191 (SGi)	**A1N034**	**MP-20**			A9N051	**Drum**				
	94.08-96.08	AT191 (SXi, SEEXT)	**A1N048**	**MP-50**			A9N051	**Drum**				
	96.08-01.12	AT211	**A1N048**	**MP-68**			A9N051	**Drum**				
2000	87, 10-89, 08	ST165						**A2N081**	**SP467**			
	92.08-96.08	CT190	**A1N048**	**MP-50**			A9N051	**Drum**				
	92.08-94.02	CT195, ST195	**A1N048**	**MP-50**			A9N051	**SN648P**	**SP467**			
	94.02-96.08	CT195, ST195	**A1N048**	**MP-50**			A9N051	**A2N094**	**C-222P**			
	96.08-01.12	CT210, 215, ST215	**A1N048**	**MP-68**			A9N051	**Drum**				
2200	98.08-01.12	CT211, 216	**A1N048**	**MP-68**			A9N051	**Drum**				
CARINA ED カリーナ												
1800	93.05-98.04	ST200, 201	**A1N048**	**MP-50**			A9N051	**Drum**				
2000	93.09-95.08	ST202 (SLIM, X)	**A1N048**	**MP-50**			A9N051	**SN648P**	**A-222P**			
	95.08-98.04	ST202 (SLIM, X)	**A1N048**	**MP-50**			A9N051	**A2N094**	**A-222P**			
	93.09-95.08	ST202(GLIM	**A1N041**	**MP-50**			A9N051	**SN648P**	**C-222P**			
	93.09-95.08	ST202(GLIM Super Strut Suspention)	**SN666P**	**MP-61**			A9N091	**SN648P**	**C-222P**			
	95.08-98.04	ST202	**A1N041**	**MP-50**			A9N051	**A2N094**	**C-222P**			
	95.08-98.04	ST202(GT Super Strut Suspention)	**SN666P**	**MP-61**			A9N091	**A2N094**	**C-222P**			
	93.09-95.08	ST203	**A1N048**	**MP-50**			A9N051	**SN648P**	**A-222P**			
	95.08-97.12	ST203	**A1N048**	**MP-50**			A9N051	**A2N094**	**A-222P**			
	94.05-95.08	ST205	**SN666P**	**MP-61**				**SN648P**	**C-438P**			
	95.08-98.04	ST205	**SN666P**	**MP-61**				**A2N094**	**C-438P**			
	94.05-97.11	ET196V	**A1N034**	**MP-19**				**Drum**				
	97.11-02.06	ET196V	**A1N034**	**MP-65**				**Drum**				
	92.11-94.05	CT196V	**A1N034**	**MP-20**			A9N054	**Drum**				
	94.05-97.11	CT196V	**A1N034**	**MP-19**			A9N054	**Drum**				
	97.11-98.05	CT196V	**A1N034**	**MP-65**			A9N054	**Drum**				

TOYOTA

cc	Year	Body Type	Front					Rear				
			Disc Pad	Seal Kit	Caliper		Piston	Disc Pad	Seal Kit	Caliper		Piston
					R	L				R	L	
CARINA ED カリーナ												
	92.11-94.05	CT198V	**A1N034**	**MP-20**			A9N054	**Drum**				
	94.05-97.11	CT198V	**A1N034**	**MP-19**			A9N054	**Drum**				
	97.11-98.05	CT198V	**A1N034**	**MP-65**			A9N054	**Drum**				
	99.08-02.06	ST198V	**A1N034**	**MP-65**			A9N054	**Drum**				
2200	98.05-02.06	CT197V, 199V	**A1N034**	**MP-65**			A9N054	**Drum**				
CELICA セリカ												
1800	99.08-06.04	ZZT230	**A1N068**	**SP409**	A5R016	A5L016	A9N056	**Drum**				
	99.08-02.08	ZZT231	**A1N065**	**SP427**				**A2N007**	**SP106**	A5R070	A5L070	A9N020
	99.08-02.08	ZZT231	**A1N065**	**SP427**	A5R012	A5L012		**A2N007**	**SP106**	A5R070	A5L070	A9N020
2000	93.09-95.08	ST202 (SS Ⅰ)	**A1N048**	**MP-50**				**SN648P**	**A-222P**			
	95.08-99.08	ST202 (SS Ⅰ)	**A1N048**	**MP-50**				**A2N094**	**A-222P**			
	93.09-97.12	ST202(SSⅡ)	**A1N041**	**MP-50**				**A2N094**	**C-222P**			
	97.12-99.08	ST202(SSⅡ)	**A1N053**	**MP-62**				**A2N094**	**C-222P**			
	93.09-95.08	ST202(SSⅡ Super Strut Suspention)	**SN666P**	**MP-61**			A9N091	**SN648P**	**C-222P**			
	95.08-99.08	ST202 (SSⅢ)	**SN666P**	**MP-61**			A9N091	**A2N094**	**C-222P**			
	94.08-95.12	ST202C	**A1N041**	**MP-50**			A9N051	**SN648P**	**C-222P**			
	95.12-97.12	ST202C	**A1N041**	**MP-50**			A9N051	**A2N094**	**C-222P**			
	97.12-99.05	ST202C	**A1N053**	**MP-62**			A9N051	**A2N094**	**A-222P**			
	93.09-95.09	ST203	**A1N048**	**MP-50**			A9N051	**SN648P**	**A-222P**			
	95.09-97.12	ST203	**A1N048**	**MP-50**			A9N051	**A2N094**	**A-222P**			
	94.02-99.08	ST205	**A1N028**	**SP287**			A9N007	**A2N027**	**SP288**			A9N002
CELSIOR セルシオ												
4000	89.11-92.08	UCF10, 11	**A1N041**	**MP-37**			A9N094	**A2N042**	**MP-38**			
	92.08-94.10	UCF10(A Type)	**A1N056**	**MP-47**				**A2N059**	**MP-54**			
	92.08-94.10	UCF10(A Type With ABS, B Type) UCF11	**A1N055**	**MP-47**				**A2N058**	**MP-54**			
	94.10-96.08	UCF20, 21	**A1N025**	**SP286**			A9N094	**A2N058**	**MP-67**			
	96.08-97.07	UCF20, 21	**A1N025**	**SP286**			A9N008	**A2N058**	**MP-67**			
	97.07-00.08	UCF20, 21	**A1N025**	**SP286**			A9N008	**A2N058**	**MP-66**			
4300	00.08-06.06	UCF30, 31	**A1N009**	**SP112**			A9N010	**A2N010**	**SP113**			A9N010
CENTURY センチュリー												
4000	87.09-92.12	VG40, 45	**A1N036**	**MP-10**				**A2N080**	**SP239**			
	92.12-97.01	VG40, 45	**A1N041**	**MP-37**				**A2N080**	**SP239**			
5000	97.04-	GZG50	**A1N025**	**SP286**			A9N008	**A2N058**	**MP-67**			
CHASER チェイサー												
1800	92.10-96.09	SX90	**A1N048**	**SP255**			A9N027	**A2N057**	**SP263**			A9N023
	97.04-98.08	SX100	**A1N048**	**SP204**			A9N031	**A2N030**	**SP295**			A9N035
	98.08-01.06	SX100	**A1N006**	**SP102**			A9N041	**A2N030**	**SP295**			A9N035
2000	92.10-96.09	GX90	**A1N048**	**SP255**			A9N027	**A2N057**	**SP263**			A9N023
	96.09-98.08	GX100	**A1N048**	**SP204**			A9N031	**A2N030**	**SP295**			A9N035
	98.08-01.06	GX100	**A1N006**	**SP102**			A9N041	**A2N030**	**SP295**			A9N035
	98.08-01.06	GX105	**A1N041**	**SP449**			A9N064	**A2N059**	**MP-73**			
2400	92.10-96.09	LX90	**A1N048**	**SP255**			A9N027	**A2N057**	**SP263**			A9N023
	96.09-98.08	LX100	**A1N048**	**SP204**			A9N031	**A2N030**	**SP295**			A9N035
	98.08-99.08	LX100	**A1N006**	**SP102**			A9N041	**A2N030**	**SP295**			A9N035
2500	92.10-95.09	JZX90	**A1N041**	**MP-50**			A9N092	**A2N057**	**SP263**			
	92.10-95.09	JZX93	**A1N041**	**MP-50**			A9N092	**A2N057**	**SP263**			A9N061
	95.09-96.09	JZX90	**A1N041**	**MP-50**			A9N092	**A2N059**	**MP-67**			A9N061
	95.09-96.09	JZX93	**A1N041**	**MP-50**			A9N092	**A2N059**	**MP-67**			A9N061
	92.10-93.04	JZX90 (Turbo)	**A1N056**	**MP-47**				**A2N057**				A9N061

cc	Year	Body Type	Front					Rear				
			Disc Pad	Seal Kit	Caliper		Piston	Disc Pad	Seal Kit	Caliper		Piston
					R	L				R	L	
CHASER チェイサー												
	93.04-96.09	JZX90 (Turbo)	**A1N056**	**MP-47**				**A2N057**				A9N029
	96.09-01.06	JZX100 , ZX105	**A1N041**	**SP449**			A9N079	**A2N059**	**MP-73**			
	96.09-01.06	JZX100 (Turbo)	**A1N056**	**MP-47**				**A2N030**	**SP293**			A9N036
3000	92.10-95.09	JZX91	**A1N041**	**MP-50**			A9N092	**A2N057**	**SP263**			
	95.09-96.09	JZX91	**A1N041**	**MP-50**			A9N092	**A2N059**	**MP-67**			
	96.09-01.06	JZX101	**A1N041**	**SP449**				**A2N059**	**MP-73**			
COASTER コースター												
3400	93.01-99.07	BB40, 46V	**A1N060**	**SP444**			A9N047	**Drum**				
3700	84.08-93.05	BB23, 24	**A1N061**	**SP444**				**Drum**				
4000	04.08-	XZB40, 46V	**A1N060**	**SP444**			A9N047	**Drum**				
	04.08-	XZB40, 46V (ABS)	**A1N100**	**SP444**			A9N047	**Drum**				
	04.08-	XZB50, 51, 56V	**A1N100**	**SP444**			A9N047	**Drum**				
	17.01-	XZB60, 70	**A1N100**	**SP444**								
4100	95.12-04.08	BB55, 58(Rear Disc)		**SP265**			A9N015		**SP217**			A9N001
	02.03-	BZB40, 50	**A1N100**	**SP444**			A9N047	**Drum**				
4200	90.01-93.01	HZB30, 31, 36V, HDB20, 30, 31	**A1N061**	**SP444**			A9N046	**Drum**				
	93.01-04.08	HZB41, 50, 56V, HDB50, 51	**A1N100**	**SP444**			A9N047	**Drum**				
	93.01-04.08	HZB40, 46V (LX With ABS)	**A1N100**	**SP444**			A9N047	**Drum**				
	93.01-04.08	HZB40, 46V (LX)	**A1N060**	**SP444**			A9N047	**Drum**				
COASTER HYBRID コースター HV												
EV	99.07-	HZB50	**A1N100**	**SP444**				**Drum**				
COROLLA/ AXIO/ SPRINTER カローラ/ アクシオ/ スプリンター												
1300	91.06-00.08	EE101, 111	**A1N034**	**MP-15**				**Drum**				
	00.08-06.09	NZE120	**A1N068**	**SP432**	A5R013	A5L013	A9N058	**Drum**				
	12.04-	NRE160	**A1N155**	**SP434**	A5R009	A5L009	A9N087	**Drum**				
1500	91.06-00.08	AE100, 110	**A1N034**	**MP-15**				**Drum**				
	00.08-06.09	NZE121	**A1N068**	**SP432**	A5R013	A5L013	A9N058	**Drum**				
	00.08-06.09	NZE124	**A1N068**	**SP409**	A5R016	A5L016	A9N056	**Drum**				
	06.10-	NZE141 (X)	**A1N155**	**SP434**	A5R009	A5L009	A9N087	**Drum**				
	06.10-	NZE141 (G) , NZE144	**A1N128**	**SP442**	A5R107	A5L107	A9N055	**Drum**				
	12.04-	NZE161	**A1N155**	**SP434**	A5R009	A5L009		**Drum**				
	12.04-	NZE164	**SN939**	**SP455**			A9N088	**Drum**				
	13.08-	NKE165	**A1N192**	**SP434**		A9N084						
	15.03-	NRE161	**A1N155**	**MP111**			A9N087					
1600	91.06-95.05	AE101 (SEG, SJ)	**A1N034**	**MP-15**				**Drum**				
	91.06-95.05	AE101	**A1N034**	**MP-19**			A9N054	**SN747P**	**C-128P+ A-128LP**			
	92.05-95.05	AE101(GT Supre Strut Suspention)	**A1N053**	**MP-42**			A9N094	**SN747P**	**C-128P+ A-128LP**			
	91.06-95.05	AE104	**A1N034**	**MP-15**				**Drum**				
	95.05-97.04	AE111 (S Cruise)	**A1N034**	**MP-15**			A9N054	**Drum**				
	97.04-00.08	AE111 (GT)	**A1N034**	**MP-19**			A9N054	**A2N095**	**A-464P**			
	95.05-00.08	AE114	**A1N034**	**MP-19**			A9N054	**Drum**				
1800	00.08-06.09	ZZE122	**A1N068**	**SP409**	A5R016	A5L016	A9N056	**A2N007**	**SP294**			A9N019
	00.08-06.09	ZZE124	**A1N068**	**SP409**	A5R016	A5L016		**Drum**				
	06.10-	ZRE142, 144	**A1N128**	**SP442**	A5R107	A5L107		**Drum**				
2000	91.06-98.04	CE100, 104, 110	**A1N034**	**MP-15**				**Drum**				
	95.05-98.04	CE114	**A1N034**	**MP-19**			A9N054	**Drum**				
2200	98.04-00.08	CE113	**A1N034**	**MP-15**				**Drum**				

TOYOTA

cc	Year	Body Type	Front					Rear				
			Disc Pad	Seal Kit	Caliper		Piston	Disc Pad	Seal Kit	Caliper		Piston
					R	L				R	L	
COROLLA/ AXIO/ SPRINTER カローラ/ アクシオ/ スプリンター												
	98.04-00.08	CE116	**A1N034**	**MP-19**				**Drum**				
	00.08-04.04	CE121	**A1N068**	**SP409**	A5R016	A5L016	A9N056	**Drum**				
COROLLA/ AXIO/ FIELDER カローラ/ アクシオ/ フィールダー												
1500	06.09-	NZE141, 144	**A1N128**	**SP442**	A5R107	A5L107	A9N055	**Drum**				
COROLLA/ FIELDER/ SPRINTER WAGON カローラ/ フィールダー/ スプリンター ワゴン												
1500	91.09-02.04	AE100G, EE104G, 108G	**A1N034**	**MP-15**				**Drum**				
	00.08-06.09	NZE121G	**A1N068**	**SP432**	A5R013	A5L013		**Drum**				
	00.08-06.09	NZE124G	**A1N068**	**SP409**	A5R016	A5L016	A9N056	**Drum**				
	06.10-	NZE141G, 144G	**A1N128**	**SP442**	A5R107	A5L107	A9N055	**Drum**				
	12.04-	NZE161, 164	**SN939**	**SP455**	A5R009	A5L009	A9N088	**Drum**				
	13.08-	NKE165	**A1N192**	**SP434**								
	15.03-	NRE161	**SN939**	**MP-111**			A9N088					
1600	96.05-00.08	AE101G	**A1N034**	**MP-19**			A9N054	**A2N095**	**A-644P**			
	95.05-00.08	AE104G	**A1N034**	**MP-19**			A9N054	**Drum**				
1800	00.08-06.09	ZZE123G	**A1N065**	**SP427**				**A2N007**	**SP106**	A5R070	A5L070	A9N020
	00.08-06.09	ZZE122G, 124G	**A1N068**	**SP409**	A5R016	A5L016	A9N056	**Drum**				
	06.10-	ZRE142G, 144G	**A1N128**	**SP442**	A5R107	A5L107	A9N055	**Drum**				
	12.04-	ZRE162G	**SN939**	**SP455**				**Drum**				
2000	91.09-98.04	CE100G, 108G	**A1N034**	**MP-15**				**Drum**				
2200	98.04-02.06	CE101G, 102G	**A1N034**	**MP-15**				**Drum**				
	00.08-04.04	CE121G	**A1N068**	**SP409**	A5R016	A5L016	A9N056	**Drum**				
COROLLA/ SED/ WG カローラ/ セダン/ ワゴン												
	02.09-	NDE120, ZZE12#	**A1N199**									
	04.05-	NDE120, ZZE12#	**A1N199**									
COROLLA/ SPRINTER VAN カローラ/ スプリンター バン												
1300	91.03-02.06	EE102V, 106V	**A1N034**	**MP-15**				**Drum**				
1500	91.09-02.06	EE103V, 107V	**A1N034**	**MP-15**				**Drum**				
1600	96.05-02.06	AE109V	**A1N034**	**MP-19**				**Drum**				
2000	91.09-98.04	CE106V	**A1N034**	**MP-15**				**Drum**				
	91.09-95.08	CE109V	**A1N034**	**MP-15**				**Drum**				
	95.08-	CE109V	**A1N034**	**MP-19**			A9N054	**Drum**				
2200	98.04-02.06	CE105V	**A1N034**	**MP-19**				**Drum**				
	98.04-02.06	CE107V	**A1N034**	**MP-15**				**Drum**				
COROLLA SPORT カローラスポーツ												
1200	18.06-	NRE210H (2WD)										
	18.06-	NRE214H (4WD)										
1800	18.06-	ZWE211H (HV)										
COROLLA Ⅱ カローラ Ⅱ												
1300	90.09-99.07	EL41, 51	**A1N034**	**MP-7**				**Drum**				
	90.09-99.07	EL41, 51 (ABS)	**A1N034**	**MP-15**				**Drum**				
1500	90.09-94.09	EL43	**A1N034**	**MP-7**				**Drum**				
	90.09-94.09	EL43 (ABS)	**A1N034**	**MP-15**				**Drum**				
	90.09-94.09	EL43(EFIS)	**A1N034**	**MP-15**				**Drum**				
	90.09-99.07	EL45, NL40, 50, 53(ABS)	**A1N034**	**MP-15**				**Drum**				
	90.09-99.07	EL45, NL40, 50, 53	**A1N034**	**MP-45**				**Drum**				
	94.09-99.07	EL55	**A1N034**	**MP-15**				**Drum**				
COROLLA LEVIN/ CERES/ TRUENO/ MARINO カローラ レビン/ セレス/ トレノ/ マリノ												
1500	91.06-00.08	AE100, 110	**A1N034**	**MP-15**				**Drum**				
1600	91.06-98.08	AE101 (SJ, X)	**A1N034**	**MP-15**				**Drum**				

cc	Year	Body Type	Front					Rear				
			Disc Pad	Seal Kit	Caliper		Piston	Disc Pad	Seal Kit	Caliper		Piston
					R	L				R	L	
COROLLA LEVIN/CERES/ TRUENO/MARINO カローラ レビン/セレス/ トレノ/マリノ												
	91.06-95.05	AE101 (G)	**A1N034**	**MP-15**			A9N054	**SN747P**	**C-128P+ A-128LP**			
	95.05-98.08	AE101 (G)	**A1N034**	**MP-15**			A9N054	**A2N095**	**A-464P**			
	91.06-95.05	AE101(GTAPX, GT)	**A1N034**	**MP-19**				**SN747P**	**C-128P+ A-128LP**			
	91.06-95.05	AE101(GTAPX Super Strut Suspention, GTZ)	**A1N053**	**MP-42**			A9N094	**SN747P**	**C-128P+ A-128LP**			
	95.05-00.08	AE111 (XZ)	**A1N034**	**MP-15**			A9N054	**Drum**				
	95.05-00.08	AE111(BZG)	**A1N034**	**MP-19**			A9N094	**A2N095**	**A-464P**			
	95.05-00.08	AE111(BZG Super Strut Suspention, BZV, BZR)	**A1N053**	**MP-42**			A9N094	**A2N095**	**A-464P**			
COROLLA SPACIO カローラ スパシオ												
1500	01.05-03.04	NZE121N(5-passenger)	**A1N068**	**SP432**	A5R013	A5L013	A9N058	**Drum**				
	01.05-07.06	NZE121N(7-passenger)	**A1N068**	**SP409**	A5R016	A5L016		**Drum**				
1600	97.01-01.05	AE111N	**A1N034**	**MP-19**				**Drum**				
1800	97.08-01.05	AE115N	**A1N034**	**MP-19**				**Drum**				
	01.05-07.06	ZZE122N, 124N	**A1N068**	**SP409**	A5R016	A5L016	A9N056	**Drum**				
COROLLA RUNX/ ALLEX カローラ ランクス/アレックス												
1500	01.01-06.09	NZE121	**A1N068**	**MP-95**	A5R013	A5L013		**Drum**				
	01.01-06.09	NZE124	**A1N068**	**SP409**	A5R016	A5L016	A9N056	**Drum**				
1800	01.01-06.09	ZZE123	**A1N065**	**SP427**				**A2N007**	**SP106**	A5R070	A5L070	A9N020
	02.09-06.09	ZZE122, 124	**A1N068**	**SP409**	A5R016	A5L016	A9N056	**Drum**				
COROLLA RUMION カローラ ルミオン												
1500	07.10-	NZE151	**A1N128**	**SP442**	A5R107	A5L107	A9N055	**A2N232**	**TP-111**			
1800	07.10-	ZRE152	**A1N128**	**SP442**	A5R107	A5L107	A9N055	**A2N232**	**TP-111**			
	07.10-	ZRE154	**A1N128**	**SP135**			A9N052	**A2N232**	**TP-111**			
COROLLA VERSO(EU) カローラ バーソ(EU)												
1800	01.09-02.11	CDE120, ZZE122		**MP-103**	A5R012	A5L012				A5R071	A5L071	A9N017
	02.11-04.01	CDE120, ZZE122		**MP-103**						A5R071	A5L071	A9N017
	01.10-04.01	ZZE121		**MP-103**	A5R016	A5L016				A5R071	A5L071	A9N017
CORONA EXiV コロナ エクシブ												
1800	93.09-98.04	ST200, 201	**A1N048**	**MP-50**				**Drum**				
2000	93.09-95.08	ST202 (TRR, TRX)	**A1N048**	**MP-50**				**SN648P**	**A-222P**			
	95.08-98.04	ST202 (200G, 200E)	**A1N048**	**MP-50**				**A2N094**	**A-222P**			
	93.09-95.08	ST202(TRG)	**A1N041**	**MP-50**				**SN648P**	**C-222P**			
	93.09-95.08	ST202(TRG Super Strut Suspention)	**SN666P**	**MP-61**			A9N091	**SN648P**	**C-222P**			
	95.08-98.04	ST202(200GT)	**A1N041**	**MP-50**				**A2N094**	**C-222P**			
	95.08-98.04	ST202(200GT Super Strut Suspention)	**SN666P**	**MP-61**			A9N091	**A2N094**	**C-222P**			
	93.09-95.08	ST203 (TRR, TRX)	**A1N048**	**MP-50**				**SN648P**	**A-222P**			
	95.08-97.12	ST203 (200G)	**A1N048**	**MP-50**				**A2N094**	**A-222P**			
	94.05-95.08	ST205 (TRG4)	**SN666P**	**MP-61**				**SN648P**	**C-438P**			
	95.08-98.04	ST205 (GT4WD)	**SN666P**	**MP-61**				**A2N094**	**C-438P**			
CORONA/ CORONA PREMIO コロナ/コロナ プレミオ												
1600	92.02-96.01	AT190	**A1N048**	**MP-50**				**Drum**				
	96.01-01.12	AT210	**A1N048**	**MP-68**				**Drum**				
1800	87.12-98.04	YT141		**A-246P**				**Drum**				
	92.02-96.01	ST190, 190Y	**A1N048**	**MP-50**				**Drum**				
	96.01-01.12	AT211	**A1N048**	**MP-68**				**Drum**				
2000	92.02-96.01	CT190, 190Y	**A1N048**	**MP-50**				**Drum**				
	92.02-96.01	ST191	**A1N048**	**MP-50**			A9N094	**SN648P**	**A-222P**			

TOYOTA

cc	Year	Body Type	Front					Rear				
			Disc Pad	Seal Kit	Caliper		Piston	Disc Pad	Seal Kit	Caliper		Piston
					R	L				R	L	
CORONA/ CORONA PREMIO コロナ/ コロナ プレミオ												
	92.02-94.02	ST195, CT195	**A1N048**	**MP-50**				**SN648P**	**MP-82**			
	94.02-96.01	ST195, CT195	**A1N048**	**MP-50**				**A2N094**	**C-222P**			
	96.01-96.08	ST210, 215, CT210, 215	**A1N048**	**MP-68**				**Drum**				
	96.08-01.12	ST210, 215, CT210, 215	**A1N048**	**MP-68**				**Drum**				
2200	97.12-01.12	CT211, 216	**A1N048**	**MP-68**				**Drum**				
CROWN/ MAJESTA/ ROYAL/ ATHLETE クラウン/ マジェスタ/ ロイヤル/ アスリート												
2000	87.09-91.10	GS130	**A1N019**	**SP249**				**A2N080**	**SP238**			A9N040
	91.10-95.12	GS130	**A1N019**	**SP249**			A9N025	**A2N080**	**SP238**			A9N040
	87.09-91.10	GS131, 141, YS130	**A1N019**	**SP249**				**A2N080**	**C-227P**			
	91.10-95.12	GS131, 141, YS130	**A1N019**	**SP249**			A9N025	**A2N080**	**C-227P**			
	95.08-01.08	GS151H	**A1N041**	**SP440**				**A2N059**	**MP-67**			
	95.12-98.08	GS151	**A1N048**	**SP003**			A9N031	**A2N057**	**SP263**			A9N061
	98.08-01.08	GS151	**A1N006**	**SP102**			A9N041	**A2N030**	**SP295**			A9N035
	00.04-03.12	GS171	**SN680**	**SP440**			A9N065	**A2N099**	**MP-79**			
	15.10-	ARS210	**A1N140**	**SP445**					**SP462**			
	18.06-	ARS220										
2400	87.09-91.10	LS130	**A1N019**	**SP249**				**A2N080**	**SP238**			A9N040
	91.10-95.12	LS130, 131, 141	**A1N019**	**SP249**			A9N025	**A2N080**	**C-227P**			
	95.08-99.09	LS151H	**A1N041**	**SP440**				**A2N059**	**MP-67**			
	95.12-99.09	LS151	**A1N048**	**SP003**			A9N031	**A2N057**	**SP263**			A9N023
2500	89.08-91.10	JZS130, 131	**A1N019**	**SP249**				**A2N080**	**C-227P**			
	91.10-95.08	JZS130, 131, 141	**A1N019**	**SP249**			A9N025	**A2N080**	**C-227P**			
	95.08-96.09.	JZS151, 153	**A1N041**	**SP440**				**A2N059**	**MP-67**			
	95.08-96.09.	JZS151, 153	**A1N041**	**MP-121**				**A2N059**	**MP-67**			
	99.09-01.08	JZS171	**SN680**	**SP440**			A9N079	**A2N099**	**SP441**			
	99.09-03.12	JZS171 (Turbo)	**A1N056**	**MP-77**				**A2N099**	**SP441**			A9N066
	99.09-03.12	JZS173	**A1N041**	**SP440**			A9N064	**A2N099**	**SP441**			A9N066
	03.12-08.02	GRS180, 181 (Royal)	**A1N140**	**SP445**			A9N065	**A2N118**	**SP417**			A9N083
	03.12-08.02	GRS180, 181 (Athlete)	**A1N073**	**SP445**			A9N065	**A2N118**	**SP418**			A9N083
	08.02-09.06	GRS200, 201 (Royal)	**A1N140**	**SP445**			A9N065	**A2N118**	**SP415**			A9N083
	09.06-12.12	GRS200, 201 (Royal)	**A1N140**	**SP445**			A9N065	**A2N118**	**SP415**			A9N083
	08.02-	GRS200, 201 (Athlete)	**A1N073**	**SP445**			A9N065	**A2N118**	**SP421**			A9N083
	14.07-	GRS210, 211, AWS210	**A1N140**	**SP445**				**★A2N226**				
	12.12-	AWS21#, GRS210, 211	**A1N140**	**SP445**			A9N065	**A2N118**	**SP462**			A9N081
	14.07-	AWS215	**A1N140**	**SP445**				**★A2N226**	**SP462**			
3000	91.10-95.08	JZS133, 135, 143, 145	**A1N019**	**SP249**			A9N065	**A2N080**	**C-227P**			
	91.10-95.03	JZS147, 149	**A1N041**	**MP-47**				**A2N084**	**MP-48**			
	95.03-95.08	JZS147, 149	**A1N041**	**MP-77**				**A2N084**	**MP-48**			
	95.08-99.03	JZS155 (Majesta)	**A1N041**	**MP-77**				**A2N059**	**MP-66**			
	99.03-99.09	JZS155 (Majesta)	**A1N041**	**MP-77**			A9N079	**A2N059**	**MP-66**			
	95.08-01.08	JZS155	**A1N041**	**SP440**				**A2N059**	**MP-67**			
	98.08-99.09	JZS157	**A1N041**	**SP440**				**A2N059**	**MP-67**			
	99.09-03.12	JZS175, JKS175	**SN680**	**SP440**			A9N065	**A2N099**	**SP441**			A9N061
	99.09-04.06	JZS177	**A1N041**	**MP-77**			A9N079	**A2N099**	**MP-87**			
	99.09-03.12	JZS179	**A1N041**	**SP440**			A9N064	**A2N099**	**SP441**			
	03.12-08.02	GRS182, 183 (Royal)	**A1N140**	**SP445**				**A2N118**	**SP417**			
	03.12-08.02	GRS182 (Athlete)	**A1N073**	**SP445**				**A2N118**				A9N081
	08.02-09.06	GRS202, 203(Royal)	**A1N140**	**SP445**				**A2N118**	**SP415**			A9N081
	09.06-12.12	GRS202, 203(Royal)	**A1N140**	**SP445**				**A2N118**	**SP415**			A9N081

★発売予定

cc	Year	Body Type	Front					Rear				
			Disc Pad	Seal Kit	Caliper		Piston	Disc Pad	Seal Kit	Caliper		Piston
					R	L				R	L	
CROWN/ MAJESTA/ ROYAL/ ATHLETE クラウン/ マジェスタ/ ロイヤル/ アスリート												
3500	05.09-08.02	GRS184 (Athlete)	**A1N166**	**SP112**	A5R079	A5L079	A9N010	**A2N118**	**SP418**			
	08.02-	GRS204 (Athlete)	**A1N166**	**SP112**	A5R079	A5L079	A9N010	**A2N118**				A9N082
	08.05-	GWS204 (Hybrid)	**A1N166**	**SP112**	A5R079	A5L079	A9N010	**A2N118**	**SP421**			A9N083
	12.12-13.09	GRS214	**A1N166**	**SP-112**				**A2N118**				A9N082
	13.09-	GRS214	**A1N166**	**SP-112**				**★A2N226**				A9N082
	12.12-	AWS210	**A1N140**	**SP445**								
4000	91.10-95.03	UZS141, 147	**A1N041**	**MP-47**				**A2N084**	**MP-48**			
	95.03-95.08	UZS141, 147	**A1N041**	**MP-77**				**A2N084**	**MP-48**			
	91.10-95.03	UZS143, 145	**A1N056**	**MP-47**				**A2N059**	**MP-48**			
	95.03-95.08	UZS143, 145	**A1N056**	**MP-77**				**A2N059**	**MP-48**			
	95.08-99.03	UZS151, 157	**A1N041**	**MP-77**				**A2N059**	**MP-66**			
	99.03-99.09	UZS151, 157	**A1N041**	**MP-77**			A9N079	**A2N059**	**MP-66**			
	95.08-99.09	UZS155	**A1N056**	**MP-77**				**A2N059**	**MP-66**			
	99.09-04.06	UZS171, 175	**A1N041**	**MP-77**			A9N079	**A2N099**	**MP-87**			
	99.09-04.06	UZS173	**A1N056**	**MP-77**	A5R022	A5L022	A9N079	**A2N099**	**MP-87**			
4300	04.06-09.02	UZS186, 187 (Majesta)	**A1N073**	**SP445**				**A2N118**	**SP418**			A9N083
	09.03-	UZS207 (Majesta)	**A1N073**	**SP445**				**A2N118**	**SP421**			A9N083
	12.12-	UZS207 (Majesta)	**A1N073**	**SP445**				**A2N118**	**SP421**			A9N083
4600	09.03-12.12	URS206 (Majesta)	**A1N166**	**SP112**				**A2N118**	**SP421**			A9N083
	12.12-	URS206 (Majesta)	**A1N166**	**SP112**				**A2N118**	**SP421**			A9N083
CROWN/ ESTATE WAGON クラウン/ エステート ワゴン												
2000	87.09-91.10	GS130G, 130W	**A1N019**	**SP249**				**Drum**				
	91.10-95.08	GS130G, 130W	**A1N019**	**SP249**			A9N025	**Drum**				
	01.08-03.12	GS171W	**SN680**	**SP440**				**A2N099**	**SP441**			
2400	87.09-91.10	LS130G, 130W	**A1N019**	**SP249**				**Drum**				
	91.10-95.08	LS130G, 130W	**A1N019**	**SP249**			A9N025	**Drum**				
2500	87.09-91.10	JZS130G	**A1N019**	**SP249**				**Drum**				
	91.10-	JZS130G	**A1N019**	**SP249**			A9N025	**Drum**				
	99.12-07.06	JZS171W	**SN680**	**SP440**				**A2N099**	**SP441**			
	99.12-03.12	JZS171W (Turbo)	**A1N056**	**MP-77**				**A2N099**	**SP441**			
	99.12-07.06	JZS173W	**A1N041**	**SP440**				**A2N099**	**SP441**			
3000	99.12-07.06	JZS175W	**SN680**	**SP440**				**A2N099**	**SP441**			
CROWN VAN クラウン バン												
2000	87.09-91.10	GS136V	**A1N019**	**SP249**				**Drum**				
	91.10-990.4	GS136V	**A1N019**	**SP249**			A9N025	**Drum**				
2400	87.09-91.10	LS136V	**A1N019**	**SP249**				**Drum**				
	91.10-99.0.4	LS136V	**A1N019**	**SP249**			A9N025	**Drum**				
CROWN COMFORT クラウン コンフォート												
2000	95.12-97.01	GXS10, YXS10, 10H	**A1N020**	**SP251**			A9N025	**Drum**				
	97.01-08.08	GXS10, YXS10, 10H		**SP299**			A9N033	**Drum**				
	01.08-08.08	GXS12, GBS12		**SP299**			A9N033	**Drum**				
	08.08-	TSS10, 10H		**SP299**			A9N033	**Drum**				
	12.07-	TSS10, 10H	**SX199 ※1** **SX299 ※2**				A9N033	**Drum**				
CROWN/ CROWN COMFORT (Taxi) クラウン/ クラウン コンフォート (タクシー)												
2000	91.12-95.12	GS130, YS130		**SP249**			A9N025	**Drum**				
	95.12-01.08	GS151, 151H		**SP003**			A9N031	**A2N057**	**SP263**			A9N023
	95.12-97.01	YXS11		**SP251**			A9N025	**Drum**				

★発売予定
※1 SX199=Non Steel
※2.SX299=Semi-metallic

TOYOTA

cc	Year	Body Type	Front					Rear				
			Disc Pad	Seal Kit	Caliper		Piston	Disc Pad	Seal Kit	Caliper		Piston
					R	L				R	L	
CROWN/ CROWN COMFORT (Taxi) クラウン/ クラウン コンフォート (タクシー)												
	97.01-06.07	YXS11	**SX199 ※1** **SX299 ※2**	**SP299**				**Drum**				
	06.07-08.08	YXS11	**SX199 ※1** **SX299 ※2**	**SP199**				**Drum**				
	08.08-	TSS11	**SX199 ※1** **SX299 ※2**	**SP199**			A9N033	**Drum**				
2400	87.09-91.10	LS130		**SP249**				**Drum**				
	91.10-95.08	LS130		**SP249**			A9N025	**Drum**				
	95.12-97.01	LXS11		**SP251**			A9N025	**Drum**				
	97.01-99.08	LXS11	**SX199 ※1** **SX299 ※2**	**SP199**			A9N033	**Drum**				
CROWN COMFORT (Training Vehicle) クラウン コンフォート (教習車)												
1800	96.04-97.01	SXS11Y	**A1N020**	**SP251**			A9N025	**Drum**				
	97.01-01.08	SXS11Y		**SP299**			A9N033	**Drum**				
2000	96.04-97.01	YXS11Y	**A1N020**	**SP251**			A9N025	**Drum**				
	97.01-08.08	YXS11Y		**SP299**			A9N033	**Drum**				
	01.08-07.07	SXS13Y		**SP299**			A9N033	**Drum**				
	06.07-07.07	SXS13Y		**SP199**			A9N033	**Drum**				
	07.09-	TSS11Y, 13Y		**SP199**			A9N033	**Drum**				
2400	96.04-97.01	LXS11Y	**A1N020**	**SP251**			A9N025	**Drum**				
	97.01-99.08	LXS11Y	**SN299**	**SP299**			A9N033	**Drum**				
CURREN カレン												
1800	95.09-98.07	ST208	**A1N048**	**MP-50**				**Drum**				
2000	94.02-98.07	ST206 (XS, FS)	**A1N048**	**MP-50**				**SN648P**	**A-222P**			
	94.02-98.07	ST206	**A1N041**	**MP-50**			A9N092	**SN648P**	**C-222P**			
	94.02-98.07	ST206(ZS Super Strut Suspention)	**SN666P**	**MP-61**			A9N091	**SN648P**	**C-222P**			
	94.02-98.07	ST207	**A1N048**	**MP-50**				**SN648P**	**A-222P**			
CYNOS サイノス												
1300	95.08-96.08	EL52	**A1N034**	**MP-7**				**Drum**				
	95.08-99.07	EL52 (ABS)	**A1N034**	**MP-15**				**Drum**				
1500	91.01-95.08	EL44 (α)	**A1N034**	**MP-15**				**Drum**				
	91.01-95.08	EL44 (β)	**A1N034**	**MP-15**				**A2N040**	**MP-23**			
	95.08-99.07	EL54	**A1N034**	**MP-15**				**Drum**				
CRESTA クレスタ												
1800	92.10-96.09	SX90	**A1N048**	**SP255**			A9N027	**A2N057**	**SP263**			A9N023
2000	92.10-96.09	GX90	**A1N048**	**SP255**			A9N027	**A2N057**	**SP263**			A9N023
	96.09-98.08	GX100	**A1N048**	**SP204**			A9N031	**A2N030**	**SP295**			A9N035
	98.08-01.06	GX100	**A1N006**	**SP102**			A9N041	**A2N030**	**SP295**			A9N035
	98.08-01.06	GX105	**A1N041**	**SP449**				**A2N059**	**MP-73**			
2400	92.10-96.09	LX90	**A1N048**	**SP255**			A9N027	**A2N057**	**SP263**			A9N061
	96.09-98.08	LX100	**A1N048**	**SP204**			A9N031	**A2N030**	**SP295**			A9N035
	98.08-99.08	LX100	**A1N006**	**SP102**			A9N041	**A2N030**	**SP295**			A9N035
2500	92.10-95.09	JZX90	**A1N041**	**MP-50**			A9N092	**A2N057**	**SP263**			A9N023
	95.09-96.09	JZX90	**A1N041**	**MP-50**			A9N092	**A2N059**	**MP-67**			
	92.10-96.09	JZX90 (Turbo)	**A1N056**	**MP-47**				**A2N057**				A9N029
	92.10-95.09	JZX93	**A1N041**	**MP-50**			A9N092	**A2N057**	**SP263**			A9N023
	95.09-96.09	JZX93	**A1N041**	**MP-50**			A9N092	**A2N059**	**MP-67**			
	96.09-01.06	JZX100 JZX105	**A1N041**	**SP449**			A9N079	**A2N059**	**MP-73**			
	96.09-01.06	JZX100 (Turbo)	**A1N056**	**MP-47**				**A2N030**	**SP293**			A9N036

※1 SX199=Non Steel
※2.SX299=Semi-metallic

cc	Year	Body Type	Front					Rear				
			Disc Pad	Seal Kit	Caliper		Piston	Disc Pad	Seal Kit	Caliper		Piston
					R	L				R	L	
CRESTA クレスタ												
3000	92.10-95.09	JZX91	**A1N041**	**MP-50**			A9N092	**A2N057**	**SP263**			A9N023
	95.09-96.09	JZX91	**A1N041**	**MP-50**			A9N092	**A2N059**	**MP-67**			
	96.09-01.06	JZX101	**A1N041**	**MP-72**				**A2N059**	**MP-73**			
DELIBOY デリボーイ												
1500	89.07-91.05	KXC10V		**C-226P**				**Drum**				
	91.05-95.11	KXC10V	**A1N078**	**C-226P**				**Drum**				
2000	91.05-94.09	CXC10V	**A1N078**	**C-226P**				**Drum**				
DUET デュエット												
1000	98.09-04.05	M100A, 110A	**G1N018**	**A-496P**				**Drum**				
1300	00.05-04.05	M101A , 111A (V, X)	**G1N018**	**A-496P**				**Drum**				
	00.05-01.12	M101A , 111A (VS)	**G1N018**	**A-496P**				**Drum**				
	01.12-04.05	M101A , 111A (VS)	**G1N006**	**TP-80**				**Drum**				
DYNA/TOYOACE (YY・YU2##, 5#, 6#, 7#) ダイナ/ トヨエース (YY・YU2##, 5#, 6#, 7#)												
1800	87.08-93.09	YY51	**SN823**	**MP-17**			A9N045	**Drum**				
2000	87.08-95.05	YY52	**SN823**	**MP-17**			A9N045	**Drum**				
	87.08-01.07	YY61, 211 (Full Just Low)	**SN650**	**MP-17**			A9N045	**Drum**				
	87.08-01.07	YY61, 201, 211	**SN823**	**MP-17**			A9N045	**Drum**				
	87.08-95.05	YU60, 61, 70 (Front Drum)						**Drum**				
	87.08-91.09	YU60 (Front Disc)	**A1N061**	**MP-8**			A9N046	**Drum**				
	91.09-95.05	YU60 (Front Disc)		**MP-8**			A9N046	**Drum**				
DYNA/TOYOACE (YY・LY1##, 2##, 5#, 6#) ダイナ/ トヨエース (YY・LY1##, 2##, 5#, 6#)												
2000	96.01-01.07	YY101	**A1N063**	**MP-10**			A9N048	**Drum**				
	96.01-01.07	YY121, 131	**A1N249**	**SP465**			A9N045	**Drum**				
	95.05-01.07	LY161, 162	**A1N249**	**SP465**				**Drum**				
2400	87.08-95.05	LY50	**SN823**	**MP-17**			A9N045	**Drum**				
	87.08-95.05	LY60 (Just Low)	**SN823**	**MP-17**			A9N045	**Drum**				
	87.08-95.05	LY60	**SN650**	**MP-17**			A9N045	**Drum**				
2700	01.07-03.08	LY230, 280	**A1N249**	**MP-27**				**Drum**				
2800	87.08-95.05	LY51	**SN823**	**MP-17**			A9N045	**Drum**				
	87.08-95.05	LY61 (Full Just Low)	**SN650**	**MP-17**			A9N045	**Drum**				
	87.08-95.05	LY61	**SN823**	**MP-17**			A9N045	**Drum**				
	95.05-99.05	LY211 (Full Just Low)	**SN650**	**MP-17**				**Drum**				
	95.05-99.05	LY201, 211	**SN823**	**MP-17**			A9N045	**Drum**				
	96.01-99.05	LY101, 111	**A1N063**	**MP-10**				**Drum**				
	98.05-99.05	LY111 (Camping Car)	**A1N050**	**SP426**	A5R007	A5L007	A9N045	**Drum**				
	96.01-99.05	LY121, 131, 151, 161	**A1N249**	**SP465**			A9N045	**Drum**				
3000	99.05-01.07	LY102, 112	**A1N063**	**MP-69**				**Drum**				
	99.05-01.07	LY112 (Camping Car)	**A1N050**	**SP426**	A5R007	A5L007		**Drum**				
	99.05-01.07	LY122, 132, 152, 162	**A1N249**	**SP465**			A9N045	**Drum**				
	99.05-01.07	LY202	**SN823**	**MP-17**			A9N045	**Drum**				
	99.05-01.07	LY212 (Full Just Low)	**SN650**	**MP-17**				**Drum**				
	99.05-01.07	LY212	**SN823**	**MP-17**				**Drum**				
	01.07-04.08	LY220, 230, 270, 280, 240V, 290V	**A1N249**	**SP465**	A5R090	A5L090	A9N045	**Drum**				
DYNA/TOYOACE (RZY・TRY・KDY2##) ダイナ/ トヨエース (RZY・TRY・KDY2##)												
2000	01.07-07.08	RZY220, 230	**A1N249**	**SP465**	A5R090	A5L090	A9N045	**Drum**				
	03.05-	TRY220, 230	**A1N249**	**SP465**	A5R090	A5L090	A9N045	**Drum**				
	03.08-	TRY231, 281	**A1N249**	**SP465**	A5R090	A5L090	A9N045	**Drum**				
2500	04.08-07.09	KDY220, 230, 240V, 270, 280, 290V	**A1N249**	**SP465**	A5R090	A5L090	A9N045	**Drum**				
2700	03.08-07.08	RZY231H, 281H	**A1N249**	**MP-27**	A5R090	A5L090	A9N045	**Drum**				

TOYOTA

cc	Year	Body Type	Front					Rear				
			Disc Pad	Seal Kit	Caliper		Piston	Disc Pad	Seal Kit	Caliper		Piston
					R	L				R	L	
DYNA/TOYOACE (RZY・TRY・KDY2##) ダイナ/ トヨエース (RZY・TRY・KDY2##)												
3000	07.09-	KDY221, 231, 241V, 271, 281	**A1N249**	**SP465**			A9N045	**Drum**				
DYNA/TOYOACE (BU6#, 7#, 8#) ダイナ/ トヨエース (BU6#, 7#, 8#)												
3000	84.09-95.05	BU60, 61, 70, 83, 84 (Front Drum)						**Drum**				
	86.08-95.05	BU60, 61, 83, 84 (Front Disc) (Full Just Low)	**SN650**	**MP-17**			A9N045	**Drum**				
	87.08-91.09	BU60	**A1N061**	**MP-8**			A9N046	**Drum**				
	91.09-95.05	BU60		**MP-8**			A9N046	**Drum**				
DYNA/TOYOACE (BU6#, 7#, 8#, 9#) ダイナ/ トヨエース(BU6#, 7#, 8#, 9#)												
3400	85.08-95.05	BU68DH, 85, 90, 95 (Front Drum)						**Drum**				
	85.08-89.10	BU85 (Front Disc)	**A1N061**	**MP-8**			A9N046	**Drum**				
	89.10-95.05	BU68DH (Front Disc)		**MP-8**			A9N046	**Drum**				
3700	88.08-95.05	BU66, 66D, 66DH, 67, 72, 73, BU74, 78, 87, 87V, 88, 91, 94, 96(Front Drum)						**Drum**				
	88.08-95.05	BU66, 87 (Front Disc) (Full Just Low)	**SN650**	**MP-17**			A9N045	**Drum**				
	88.08-91.09	BU66, 66H, 67, 78, 87, 87V, 88BU94	**A1N061**	**MP-8**				**Drum**				
	91.09-95.05	BU66, 66H, 67, 78, 87, 87V, 88BU94		**MP-8**				**Drum**				
DYNA/TOYOACE (WU7#, 8#, 9#) ダイナ/ トヨエース (WU7#, 8#, 9#)												
4000	88.08-95.05	WU75, 85, 90, 93, 95 (Front Drum)						**Drum**				
	89.10-95.05	WU85, 93 (Front Disc)		**MP-8**			A9N046	**Drum**				
DYNA/TOYOACE (RZU1##) ダイナ/ トヨエース (RZU1##)												
2700	95.05-00.05	RZU100 (Front Drum)						**Drum**				
	95.05-00.05	RZU100 (Front Disc) High Floor, Dump, Fire Engine		**MP-18**				**Drum**				
	95.05-00.05	RZU100 (Front Disc) Full Just Low, Dump	**SN650**	**MP-17**			A9N045	**Drum**				
	97.08-00.05	RZU140	**SN650**	**MP-17**			A9N045	**Drum**				
DYNA/TOYOACE (BU1##, 3##) ダイナ/ トヨエース (BU1##, 3##)												
3400	95.05-99.05	BU100 (Front Drum)						**Drum**				
	95.05-99.05	BU100 (Front Disc) High Floor, Dump, Fire Engine		**MP-18**				**Drum**				
	95.05-99.05	BU100 (Front Disc) Full Just Low, Dump	**SN650**	**MP-17**			A9N045	**Drum**				
	97.08-99.05	BU105, 145, High Floor	**A1N100**	**MP-8**			A9N047	**Drum**				
	97.08-99.05	BU105, 145, Just Low, Full Just Low	**A1N060**	**MP-8**				**Drum**				
	95.05-99.05	BU120						**Drum**				
	95.05-97.08	BU140 (Front Drum)						**Drum**				
	95.05-97.08	BU140 (Front Disc)		**MP-8**			A9N046	**Drum**				
3700	99.05-04.06	BU301, 301A, 306, 346, Low Floor, High Floor, Just Low	**A1N060**	**SP438**				**Drum**				
	99.05-04.06	BU301, 306, 306V, 346, Full Just Low	**A1N102**	**SP438**				**Drum**				
	99.05-04.06	BU301, Low Floor, High Floor, Just Low	**A1N060**	**SP438**	A5R089	A5L089		**Drum**				
	99.05-04.06	BU301, Full Just Low	**A1N102**	**SP438**	A5R089	A5L089		**Drum**				
DYNA/TOYOACE (BU1##, 2##) ダイナ/ トヨエース (BU1##, 2##)												
4100	95.05-99.05	BU102, 142 (Front Drum)						**Drum**				
	95.05-99.05	BU102, 142 (Front Disc) High Floor, Dump, Fire Engine		**MP-18**				**Drum**				
	95.05-99.05	BU102, 142 (Front Disc) Full Just Low, Dump	**SN650**	**MP-17**			A9N045	**Drum**				
	95.05-99.05	BU112 (Front Drum)						**Drum**				
	95.05-99.05	BU112 (Front Disc)		**MP-8**			A9N046	**Drum**				
	95.05-99.05	BU122						**Drum**				
	95.05-99.05	BU132 (Front Drum)						**Drum**				
	95.05-99.05	BU132 (Front Disc) High Floor		**MP-8**			A9N046	**Drum**				
	95.05-99.05	BU132 (Front Disc) Full Just Low	**SN650**	**MP-17**			A9N045	**Drum**				

cc	Year	Body Type	Front					Rear				
			Disc Pad	Seal Kit	Caliper		Piston	Disc Pad	Seal Kit	Caliper		Piston
					R	L				R	L	
DYNA/TOYOACE (BU1##, 2##) ダイナ/ トヨエース (BU1##, 2##)												
	95.05-99.05	BU137	**A1N060**	**MP-8**				**Drum**				
	95.05-99.05	BU162, 172, 182						**Drum**				
	95.05-99.05	BU202, 212 (Front Drum)						**Drum**				
	95.05-99.05	BU202 (Front Disc)		**MP-8**			A9N046	**Drum**				
	95.05-99.05	BU212 (Front Disc)		**MP-8**			A9N046	**Drum**				
	95.05-99.05	BU222 (Front Drum)						**Drum**				
	95.05-99.05	BU222 (Front Disc)		**MP-8**			A9N046	**Drum**				
	97.08-99.05	BU107, 147 (Front Disc) High Floor	**A1N100**	**MP-8**				**Drum**				
	97.08-99.05	BU107, 147 (Front Disc)	**A1N060**	**MP-8**				**Drum**				
	97.08-99.05	BU137	**A1N060**	**MP-8**				**Drum**				
	97.08-99.05	BU297		**SP265**			A9N015		**SP217**			A9N001
DYNA/TOYOACE (XZU・RZU3##) ダイナ/ トヨエース (XZU・RZU3##)												
2700	00.05-	RZU300, 2tのJust Low, Full Just Low	**SN879P**	**SP438**				**Drum**				
	00.05-	RZU300, 3tのFull Just Low, High Floor	**A1N060**	**SP438**	A5R089	A5L089		**Drum**				
	00.05-	RZU300A, 301, 340	**SN879P**	**SP438**	A5R089	A5L089		**Drum**				
4000	03.10-	XZU304, 2t Full Just Low	**SN879P**	**SP438**				Disc Brake SN932	**C-721P**			
	03.10-	XZU304, 1.75t, 2t, 3t Low Floor, High Floor, 3t Full Just Low	**A1N060**	**SP438**	A5R089	A5L089		Disc Brake SN932	**C-721P**			
	03.10-	XZU304A, 304D, 304H, XZU305A, 314D, 324D	**A1N060**	**SP438**	A5R089	A5L089		Disc Brake SN932	**C-721P**			
	04.06-	XZU308, High Floor, Just Low	**A1N060**	**SP438**				Disc Brake SN932	**C-721P**			
	04.06-	XZU308, 308V, Full Just Low	**A1N102**	**SP438**				Disc Brake SN932	**C-721P**			
DYNA/TOYOACE (BZU・XZU3##) ダイナ/ トヨエース (BZU・XZU3##)												
4000	03.10-	XZU344, 2t Full Just Low	**A1N102**	**SP438**				Disc Brake SN932	**C-721P**			
	03.10-	XZU344, 2t, 3t High Floor, 3t Full Just Low	**A1N060**	**SP438**	A5R089	A5L089		Disc Brake SN932	**C-721P**			
	04.06-	XZU344, 3.5t High Floor	**J1N018**	**C-617AP**				**SN896**	**C-617AP**			
	04.06-	XZU334, 2t Full Just Low	**A1N102**	**SP438**				Disc Brake SN932	**C-721P**			
	04.06-	XZU334, 3t Full Just Low, High Floor	**A1N060**	**SP438**	A5R089	A5L089		Disc Brake SN932	**C-721P**			
	04.06-	XZU334, 4t High Floor	**J1N018**	**C-617AP**				**SN896**	**C-617AP**			
	04.06-	XZU338, 348, Just Low, High Floor	**A1N060**	**SP438**				Disc Brake SN932	**C-721P**			
	04.06-	XZU338, 348, Full Just Low	**A1N102**	**SP438**				Disc Brake SN932	**C-721P**			
	04.06-	XZU354D	**A1N102**	**SP438**				Disc Brake SN932	**C-721P**			
	04.06-	XZU354H	**J1N018**	**C-617AP**				**SN896**	**C-617AP**			
	04.06-	XZU368, 368D, 378, 388	**A1N060**	**SP438**				Disc Brake SN932	**C-721P**			
4100	00.05-03.06	XZU301A, 301H, 341	**A1N060**	**SP438**	A5R089	A5L089		Disc Brake SN932	**C-721P**			
	00.05-03.06	XZU302, 342	**A1N102**	**SP438**	A5R089	A5L089		Disc Brake SN932	**C-721P**			
	99.05-07.05	BZU410, 2t	**A1N060**	**SP438**	A5R089	A5L089		Disc Brake SN932	**C-721P**			
	03.06-	BZU300, 340, 2t Full Just Low	**A1N102**	**SP438**	A5R089	A5L089		Disc Brake SN932	**C-721P**			
	03.06-	BZU300, 340, 3t Full Just Low, High Floor	**A1N060**	**SP438**	A5R089	A5L089		Disc Brake SN932	**C-721P**			
	03.06-	BZU300A	**A1N060**	**SP438**	A5R089	A5L089		Disc Brake SN932	**C-721P**			
	11.07-	BZU600, 3t, Full Just Low, High Floor	**A1N060**	**MP83**	A5R089	A5L089		Disc Brake SN932	**C-721P**			
4600	99.05-04.06	XZU302, 2t Full Just Low	**A1N102**	**SP438**	A5R089	A5L089		Disc Brake SN932	**C-721P**			
	99.05-04.06	XZU302, 2.95t, 3t Full Just Low, 2t, 3t High Floor	**A1N060**	**SP438**	A5R089	A5L089		Disc Brake SN932	**C-721P**			
	99.05-04.06	XZU302A, 302D, 302H	**A1N060**	**SP438**	A5R089	A5L089		Disc Brake SN932	**C-721P**			
	99.05-04.06	XZU307, Just Low, High Floor	**A1N060**	**SP438**				Disc Brake SN932	**C-721P**			
	99.05-04.06	XZU307, 307V, Full Just Low	**A1N102**	**SP438**				Disc Brake SN932	**C-721P**			
	99.05-04.06	XZU312D, 2tのFull Just Low	**A1N102**	**SP438**				Disc Brake SN932	**C-721P**			
	99.05-04.06	XZU312D, 3tのFull Just Low	**A1N060**	**SP438**				Disc Brake SN932	**C-721P**			
	99.05-04.06	XZU322, 322D	**A1N060**	**SP438**	A5R089	A5L089		Disc Brake SN932	**C-721P**			
	99.05-04.06	XZU337, 342, 347, 352D, Just Low, High Floor	**A1N060**	**SP438**	A5R089	A5L089		Disc Brake SN932	**C-721P**			

TOYOTA

cc	Year	Body Type	Front					Rear				
			Disc Pad	Seal Kit	Caliper		Piston	Disc Pad	Seal Kit	Caliper		Piston
					R	L				R	L	
DYNA/TOYOACE (BZU・XZU3##) ダイナ/ トヨエース (BZU・XZU3##)												
	99.05-04.06	XZU337, 342, 347, 352D, Full Just Low	**A1N102**	**SP438**				Disc Brake SN932	**C-721P**			
	99.07-04.06	XZU362, 362A, 362D, 372, 382	**A1N100**	**SP438**				Disc Brake SN932	**C-721P**			
DYNA/TOYOACE (XZU1##, 3##) ダイナ/ トヨエース (XZU1##, 3##)												
4900	99.05-	XZU301, 2t, 2.95t, High Floor, 3t High Floor, Full Just Low	**A1N060**	**SP438**	A5R089	A5L089		**Drum**				
	99.05-	XZU301, 2tのFull Just Low	**A1N102**	**SP438**	A5R089	A5L089		**Drum**				
	99.05-	XZU301A, 301D, 301H	**A1N060**	**SP438**	A5R089	A5L089		**Drum**				
	99.05-	XZU306, Just Low, High Floor	**A1N060**	**SP438**				**Drum**				
	99.05-	XZU306, Full Just Low	**A1N102**	**SP438**				**Drum**				
	99.05-	XZU311A, 311D, 2t Full Just Low	**A1N102**	**SP438**				**Drum**				
	99.05-	XZU311A, 311D, 3t Full Just Low	**A1N060**	**SP438**				**Drum**				
	99.05-	XZU321A, 321D, 331	**A1N060**	**SP438**	A5R089	A5L089		**Drum**				
	99.05-	XZU341, 346, 2t, 2.95t, 3t High Floor, Just Low, 2.95t, 3t Full Just Low	**A1N060**	**SP438**				**Drum**				
	99.05-	XZU341, 346, 2t Full Just Low	**A1N102**	**SP438**				**Drum**				
	99.05-	XZU, 336, 351D, Just Low	**A1N060**	**SP438**	A5R089	A5L089		**Drum**				
	99.05-	XZU336, 351D, Full Just Low	**A1N102**	**SP438**				**Drum**				
	99.08-04.06	XZU371	**A1N100**	**SP438**				**Drum**				
5300	95.05-99.05	XZU130, 140						**Drum**				
	99.05-04.06	XZU300H, 320A	**A1N060**	**SP438**	A5R089	A5L089		**Drum**				
	99.05-04.06	XZU330, 340, 350H (3.5t, 4t)	**A1N060**	**SP438**	A5R089	A5L089		**Drum**				
	99.05-04.06	XZU330, 340 (3t)	**A1N060**	**SP438**	A5R089	A5L089		**Drum**				
DYNA/TOYOACE (XZU4##) ダイナ/ トヨエース (XZU4##)												
4000	04.06-	XZU404, 2t Full Just Low	**A1N060**	**SP438**	A5R089	A5L089		**SN932**	**C-721P**			
	04.06-	XZU404, 3t, 3.5t Full Just Low, High Floor	**J1N018**	**C-617AP**				**SN896**	**C-617AP**			
	04.06-	XZU404A	**J1N018**	**C-617AP**				**SN896**	**C-617AP**			
	04.06-	XZU424, 2t Full Just Low, High Floor	**A1N060**	**SP438**	A5R089	A5L089		**SN932**	**C-721P**			
	04.06-	XZU424, 3t, 3.5t, 4t Full Just Low, High Floor	**J1N018**	**C-617AP**				**SN896**	**C-617AP**			
	03.10-	XZU414, 2t Just Low, Full Just Low, High Floor	**A1N060**	**SP438**	A5R089	A5L089		**SN932**	**C-721P**			
	03.10-	XZU414, 3t, 3.5t, 4t Full Just Low, High Floor	**J1N018**	**C-617AP**				**SN896**	**C-617AP**			
	03.10-	XZU415, 434	**J1N018**	**C-617AP**				**SN896**	**C-617AP**			
	06.10-	XZU454, 488	**A1N060**	**SP438**	A5R089	A5L089		**SN932**	**C-721P**			
DYNA/TOYOACE (BU・BZU・XZU4##) ダイナ/ トヨエース (BU・BZU・XZU4##)												
4100	99.08-04.06	BU410, 420, 430, 3t, 3.5t, 4t Full Just Low, High Floor						**Drum**				
	99.08-04.06	BU400, 410, 420, 2t Full Just Low, High Floor	**A1N060**	**SP438**				**Drum**				
	00.11-07.05	XZU412, BZU410, 3t Full Just Low						**Drum**				
	00.11-07.05	XZU412, BZU410, 2t Full Just Low	**A1N060**	**SP438**	A5R089	A5L089		**Drum**				
4600	99.05-04.06	XZU402	**A1N060**	**SP438**	A5R089	A5L089		**Drum**				
	99.05-04.06	XZU412, 3t Full Just Low, High Floor						**Drum**				
	99.05-04.06	XZU412, 2t Just Low, Full Just Low, High Floor	**A1N060**	**SP438**	A5R089	A5L089		**Drum**				
4700	04.06-06.10	XZU413, 2t	**A1N060**	**SP438**	A5R089	A5L089		**Drum**				
	04.06-06.10	XZU413, 3t, 3.5t, 4t	**J1N018**	**C-617AP**				Disc Brake SN896	**C-617AP**			
4900	99.05-06.10	XZU401, 411, 421, 2.95t, 3.5t Just Low, High Floor, 3t 4AT, 6MT						**Drum**				
	99.05-06.10	XZU401, 411, 421, 2t Just Low, Full Just Low, High Floor	**A1N060**	**SP438**	A5R089	A5L089		**Drum**				
	99.05-06.10	XZU401, 411, 421, 3t 5MT, 6AT	**J1N018**	**C-617AP**				**SN896**	**C-617AP**			

cc	Year	Body Type	Front					Rear				
			Disc Pad	Seal Kit	Caliper		Piston	Disc Pad	Seal Kit	Caliper		Piston
					R	L				R	L	
DYNA/TOYOACE (BU・BZU・XZU4##) ダイナ/トヨエース (BU・BZU・XZU4##)												
5300	99.05-04.06	XZU400, 400A, 410, 420, 430, 3t, 3.5t, 4t Full Just Low, High Floor						**Drum**				
	99.05-04.06	XZU410, 2t Just Low	**A1N060**	**SP438**				**Drum**				
DYNA/TOYOACE (TRU3##, 6##, XZU5##, 6##) ダイナ/トヨエース (TRU3##, 6##, XZU5##, 6##)												
2700	07.05-	TRU300, 2t Full Just Low	**A1N102**	**SP438**	A5R089	A5L089		Disc Brake SN932	**C-721P**			
	07.05-	TRU300, 3t Full Just Low, High Floor	**A1N060**	**SP438**	A5R089	A5L089		Disc Brake SN932	**C-721P**			
	07.05-	TRU300A, 340, 500	**A1N102**	**SP438**	A5R089	A5L089		Disc Brake SN932	**C-721P**			
	11.07-	TRU600, Full Just Low, High Floor	**A1N060**	**MP83**	A5R089	A5L089		Disc Brake SN932	**C-721P**			
4000	06.10-	XZU504, Full Just Low	**SN137**	**SP137**			A9N032	Disc Brake SN137	**SP137**			A9N032
	06.10-	XZU504, High Floor Single Tire	**A1N060**	**SP438**	A5R089	A5L089		**Drum**				
	06.10-	XZU568, 568D	**A1N060**	**SP438**				Disc Brake SN932	**C-721P**			
	06.10-	XZU508, 508V, 524D, 538, XZU548, 554D	**SN137**	**SP137**			A9N032	Disc Brake SN137	**SP137**			A9N032
	10.08-	XZU504, 524, 554		**SP430**	A5R087	A5L087	A9N032		**SP430**	A5R088	A5L088	
	10.08-	XZU508, 538, 548		**SP430**			A9N032		**SP430**	A5R088	A5L088	
	11.07-	XZU600, 620, 630, 640, 650	**A1N060**	**MP83**	A5R089	A5L089		Disc Brake SN932	**C-721P**			
DYNA/TOYOACE (XZC6##, 7##) ダイナ/トヨエース (XZC6##, 7##)												
4000	11.07-	XZC600, Full Just Low, High Floor	**A1N060**	**MP83**	A5R089	A5L089		Disc Brake SN932	**C-721P**			
	11.07-	XZC600, 610, 630			A5R087	A5L087	A9N032			A5R088	A5L088	A9N032
	11.07-	XZC60#, 645, 655					A9N032			A5R088	A5L088	A9N032
	11.07-	XZC710, 2t	**A1N060**	**MP83**	A5R089	A5L089		Disc Brake SN932	**C-721P**			
DYNA/TOYOACE HV (XKU3##, 4##, 5##, 6##, 7##) ダイナ/トヨエース HV (XKU3##, 4##, 5##, 6##, 7##)												
4000	03.10-06.10	XKU304H, 344	**A1N060**	**SP438**	A5R089	A5L089		**Drum**				
	06.10-	XKU304A	**A1N060**	**SP438**	A5R089	A5L089		Disc Brake SN932	**C-721P**			
	06.10-	XKU308	**A1N102**	**SP438**				Disc Brake SN932	**C-721P**			
	06.10-	XKU308H	**A1N060**	**SP438**				Disc Brake SN932	**C-721P**			
	03.10-	XKU344	**A1N060**	**SP438**	A5R089	A5L089		Disc Brake SN932	**C-721P**			
	06.10-	XKU338	**A1N102**	**SP438**				Disc Brake SN932	**C-721P**			
	06.10-	XKU348, Full Just Low	**A1N102**	**SP438**				Disc Brake SN932	**C-721P**			
	06.10-	XKU348, High Floor	**A1N060**	**SP438**				Disc Brake SN932	**C-721P**			
	03.10-	XKU414, 2t Full Just Low	**A1N060**	**SP438**	A5R089	A5L089		Disc Brake SN932	**※1**			
	03.10-	XKU414, 3t Full Just Low, High Floor	**J1N018**	**C-617AP**				**SN896**	**C-617AP**			
	03.10-	XKU424	**J1N018**	**C-617AP**				**SN896**	**C-617AP**			
	06.10-	XKU508, 508H	**SN137**	**SP137**			A9N032	Disc Brake SN137	**SP137**			A9N032
	10.08-	XKU508		**SP430**			A9N032		**SP430**	A5R088	A5L088	
	11.07-	XKU600, 640, 650, 3t	**A1N060**	**MP83**	A5R089	A5L089		Disc Brake SN932	**C-721P**			
	11.07-	XKU710, 720	**A1N060**	**MP83**	A5R089	A5L089		Disc Brake SN932	**C-721P**			
DYNA/TOYOACE HV (XKC6##) ダイナ/トヨエース HV (XKC, 6##)												
4000	11.07-	XKC605, 645, 655					A9N032			A5R088	A5L088	A9N032
ESTIMA/ESTIMA T/L エスティマ/エスティマ T/L												
2400	90.05-92.09	TCR11W, 21W	**A1N085**	**A-239P**				**A2N047**	**MP-41**			
	92.09-96.08	TCR11W, 21W	**A1N093**	**A-239P**				**A2N047**	**MP-41**			
	96.08-99.12	TCR11W, 21W	**A1N096**	**A-239P**				**A2N047**	**MP-41**			
	93.02-96.08	TCR10W, 20W	**A1N092**	**A-379P**				**A2N047**	**MP-41**			
	93.02-96.08	TCR10W, 20W (ABS)	**A1N093**	**A-239P**				**A2N047**	**MP-41**			
	96.08-99.12	TCR10W, 20W	**A1N096**	**A-379P**				**A2N047**	**MP-41**			
	00.02-03.04	ACR30W, 40W	**A1N101**	**A-638P**				**A2N069**	**MP-94**	A5R011	A5L011	
	03.04-06.01	ACR30W, 40W	**SN909**	**SP443**			A9N078	**A2N069**	**MP-94**	A5R011	A5L011	A9N086
	06.01-	ACR50W, 55W	**A1N139**	**A-735P**				**A2N191**				
3000	99.12-03.04	MCR30W, 40W	**A1N101**	**A-638P**				**A2N069**	**MP-94**	A5R011	A5L011	

※1 '03.10～06.10=04479-37140 '06.10～C-721P

TOYOTA

cc	Year	Body Type	Front					Rear				
			Disc Pad	Seal Kit	Caliper		Piston	Disc Pad	Seal Kit	Caliper		Piston
					R	L				R	L	
ESTIMA/ESTIMA T/L エスティマ/エスティマ T/L												
	03.04-06.01	MCR30W, 40W	**SN909**	**SP403**			A9N078	**A2N069**	**MP-94**	A5R011	A5L011	
3500	06.01-	GSR50W, 55W	**A1N139**	**A-735P**				**A2N191**				
ESTIMA HYBRID エスティマ HV												
2400	01.05-03.08	AHR10W	**A1N101**	**A-638P**				**A2N069**	**MP-94**	A5R011	A5L011	A9N086
	03.08-06.06	AHR10W	**A1N105**	**A-667P**				**A2N069**		A5R011	A5L011	A9N086
	06.06-	AHR20W	**A1N139**	**A-735P**				**A2N191**				
ESTIMA EMINA/LUCIDA エスティマ エミーナ/ルシーダ												
2200	92.01-93.08	CXR10G, 20G	**A1N085**	**A-379P**				**Drum**				
	93.08-96.08	CXR10G, 20G	**A1N093**	**A-379P**				**Drum**				
	93.08-96.08	CXR10G, 20G (ABS)	**A1N092**	**A-239P**				**A2N047**	**MP-41**			
	96.08-99.12	CXR10G, 20G	**A1N096**	**A-379P**				**A2N047**	**MP-41**			
	92.01-93.08	CXR11G, 21G (Rear Drum)	**A1N085**	**A-379P**				**Drum**				
	92.01-93.08	CXR11G, 21G (Rear Disc)	**A1N085**	**A-239P**				**A2N047**	**MP-41**			
	93.08-96.08	CXR11G, 21G	**A1N093**	**A-379P**				**Drum**				
	93.08-95.01	CXR11G, 21G (ABS)	**A1N092**	**A-239P**				**A2N047**	**MP-41**			
	95.01-96.08	CXR11G, 21G (ABS)	**A1N092**	**A-379P**				**A2N047**	**MP-41**			
	96.08-99.12	CXR11G, 21G	**A1N096**	**A-379P**				**A2N047**	**MP-41**			
2400	92.01-93.08	TCR10G, 20G	**A1N085**	**A-379P**				**Drum**				
	93.08-96.04	TCR10G, 20G	**A1N093**	**A-379P**				**Drum**				
	93.08-95.01	TCR10G, 20G (ABS)	**A1N092**	**A-239P**				**A2N047**	**MP-41**			
	95.01-96.08	TCR10G, 20G (ABS)	**A1N092**	**A-379P**				**A2N047**	**MP-41**			
	96.08-99.12	TCR10G, 20G	**A1N096**	**A-379P**				**A2N047**	**MP-41**			
	92.01-93.08	TCR11G, 21G (Rear Drum)	**A1N085**	**A-379P**				**Drum**				
	92.01-93.08	TCR11G, 21G (Rear Disc)	**A1N085**	**A-239P**				**A2N047**	**MP-41**			
	93.08-96.08	TCR11G, 21G	**A1N093**	**A-379P**				**Drum**				
	93.08-95.01	TCR11G, 21G (ABS)	**A1N092**	**A-239P**				**A2N047**	**MP-41**			
	95.01-96.08	TCR11G, 21G (ABS)	**A1N092**	**A-379P**				**A2N047**	**MP-41**			
	96.08-99.12	TCR11G, 21G	**A1N096**	**A-379P**				**A2N047**	**MP-41**			
ESQUIREエスクァイア												
1800	14.10-	ZWR80G	**A1N128**	**SP-135**				**★A2N228**	**SP433**			
2000	14.10-	ZRR80G, ZRR85G(4WD)	**A1N128**	**SP-135**				**★A2N228**	**SP433**			
FJ CRUISER FJクルーザー												
4000	10.11-	GSJ15	**A1N011**	**SP119A**			A9N016	**A2N012**	**SP120**	A5R047	A5L047	A9N044
FUN CARGO ファンカーゴ												
1300	99.08-04.11	NCP20	**A1N068**	**SP424**	A5R015	A5L015	A9N059	**Drum**				
	04.11-05.09	NCP20	**SN130P**	**SP424**	A5R015	A5L015	A9N059	**Drum**				
1500	99.08-04.11	NCP21, 25	**A1N068**	**SP424**	A5R015	A5L015	A9N059	**Drum**				
	04.11-05.09	NCP21, 25	**SN130P**	**SP424**	A5R015	A5L015	A9N059	**Drum**				
GAIA ガイア												
2000	98.05-01.04	SXM10G, 15G	**A1N048**	**SP427**				**Drum**				
	01.04-02.08	SXM10G, 15G	**A1N097**	**A-678P**				**Drum**				
	01.04-04.09	ACM10G, 15G	**A1N097**	**A-678P**				**Drum**				
2200	98.05-01.04	CXM10G	**A1N048**	**SP427**				**Drum**				
	01.04-04.09	CXM10G	**A1N097**	**A-678P**				**Drum**				
GRANVIA/GRAND HIACE グランビア/グランドハイエース												
2700	95.08-97.08	RCH11W	**A1N050**	**SP426**			A9N045	**Drum**				
	97.08-98.04	RCH11W	**A1N050**	**SP426**	A5R007	A5L007	A9N045	**A2N059**	**SP450**			A9N049
3000	95.08-97.08	KCH12K, 10W, 16W	**A1N050**	**SP426**			A9N045	**Drum**				
	97.08-02.05	KCH12K, 10W, 16W	**A1N050**	**SP426**	A5R007	A5L007	A9N045	**A2N059**	**SP450**			A9N049

★発売予定

cc	Year	Body Type	Front					Rear				
			Disc Pad	Seal Kit	Caliper		Piston	Disc Pad	Seal Kit	Caliper		Piston
					R	L				R	L	
GRANVIA/GRAND HIACE グランビア/グランドハイエース												
3400	97.08-05.01	VCH10W, 16W, 22K, 28K	**A1N050**	**SP426**	A5R007	A5L007	A9N045	**A2N059**	**SP450**			A9N049
HIACE WAGON ハイエース ワゴン												
2000	89.08-93.08	RZH100G, 110G	**A1N049**	**SP448**				**Drum**				
	93.08-95.08	RZH100G, 110G	**A1N050**	**SP426**				**Drum**				
2400	89.08-93.08	LH100G, 110G, 120G, 140G, RZH101G	**A1N049**	**SP448**				**Drum**				
	93.08-02.08	RZH101G, 111G	**A1N050**	**SP426**				**Drum**				
2700	04.08-	TRH214W, 219W, 224W, 229W	**A1N119**	**SP426**	A5R007	A5L007		**Drum**				
2800	89.08-93.08	LH107G, 107W, 117G	**A1N050**	**MP-31**				**Drum**				
3000	93.08-04.08	KZH100G, 106G, 106W, 110G, KZH116G, 120G, 126G	**A1N050**	**SP426**				**Drum**				
HIACE/REGIUS ACE VAN ハイエース/レジアスエース バン												
2000	89.08-96.08	RZH102V, 112V, 112K, 182K, RZH122V	**A1N049**	**SP448**				**Drum**				
	96.08-97.03	RZH102V, 112V, 112K, 182K, RZH122V	**A1N050**	**SP426**				**Drum**				
	97.03-05.01	RZH102V, 112V, 112K, 182K, RZH122V	**A1N050**	**SP426**	A5R007	A5L007	A9N045	**Drum**				
	03.08-04.08	TRH102V, 112V, 112K, 122K	**A1N050**	**SP426**	A5R007	A5L007		**Drum**				
	04.08-	TRH200K, 200V	**A1N119**	**SP426**	A5R007	A5L007	A9N045	**Drum**				
2400	89.08-93.08	LH102V	**A1N049**	**SP448**				**Drum**				
	95.08-99.07	RZH133V	**A1N050**	**SP426**				**Drum**				
	00.12-03.08	RZH183K	**A1N050**	**SP426**	A5R007	A5L007		**Drum**				
2500	04.08-07.09	KDH200K, 205K, 220K, 225K, KDH200V, 205V	**A1N119**	**SP426**	A5R007	A5L007		**Drum**				
2700	04.08-	TRH211K, 216K, 221K, 226K	**A1N119**	**SP426**	A5R007	A5L007	A9N045	**Drum**				
2800	93.08-96.08	LH103V, 113V, 113K, 123V	**A1N049**	**SP448**				**Drum**				
	96.08-97.03	LH103V, 113V, 113K, 123V	**A1N050**	**SP426**				**Drum**				
	97.03-99.07	LH103V, 113V, 113K, 124V	**A1N050**	**SP426**	A5R007	A5L007		**Drum**				
	89.08-93.08	LH109V, 119V, 129V	**A1N050**	**MP-31**				**Drum**				
	93.08-97.03	LH109V, 119V, 129V	**A1N050**	**SP426**				**Drum**				
	97.03-99.07	LH109V, 119V, 129V	**A1N050**	**SP426**	A5R023	A5L023		**Drum**				
	17.12-	GDH201V, GDH201K, GDH211K, GDH221K	**A1N119**	**SP426**								
3000	93.08-97.03	KZH132	**A1N050**	**SP426**				**Drum**				
	97.03-05.01	KZN132	**A1N050**	**SP426**	A5R007	A5L007		**Drum**				
	93.08-97.03	KZH138	**A1N050**	**SP426**				**Drum**				
	97.03-04.08	KZH138, LH168, 178, 186, 188	**A1N050**	**SP426**	A5R023	A5L023		**Drum**				
	07.09-	KDH201K, 201V, 206K, 206V, KDH221K	**A1N119**	**SP426**	A5R007	A5L007	A9N045	**Drum**				
HIACE REGIUS WAGON/ TOURING HIACE ハイエース レジアス ワゴン/ ツーリング ハイエース												
2700	97.04-02.05	RCH41W, 47W	**A1N050**	**SP426**	A5R007	A5L007		**A2N059**	**SP450**			
3000	97.04-02.05	KCH40, LXH43, RCH41.42	**A1N050**	**SP426**	A5R007	A5L007	A9N045	**A2N059**	**SP450**			
	97.04-02.05	KCH46, LXH49, RCH47	**A1N050**	**SP426**	A5R023	A5L023	A9N045	**A2N059**	**SP450**			
HIACE REGIUS VAN ハイエース レジアス バン												
2000	97.06-02.05	RCH42V	**A1N050**	**SP426**	A5R007	A5L007		**Drum**				
3000	97.06-02.05	LXH43V, 49V	**A1N050**	**SP426**	A5R007	A5L007		**Drum**				
	97.06-02.05	LXH49V	**A1N050**	**SP426**	A5R023	A5L023		**Drum**				
HIACE COMMUTER ハイエース コミューター												
2000	89.08-96.08	RZH124B	**A1N049**	**MP-30**				**Drum**				
	96.08-03.08	RZH124B	**A1N050**	**SP426**				**Drum**				
	03.08-04.08	TRH124B	**A1N050**	**SP426**	A5R007	A5L007		**Drum**				
2400	98.08-03.08	RZH125B	**A1N050**	**SP426**				**Drum**				
2500	05.01-07.09	KDH222B, 227B	**A1N119**	**SP426**	A5R007	A5L007		**Drum**				
2700	05.01-	TRH223B, 228B	**A1N119**	**SP426**	A5R007	A5L007		**Drum**				
2800	89.08-96.08	LH115B, 125B	**A1N049**	**SP448**				**Drum**				

TOYOTA

cc	Year	Body Type	Front					Rear				
			Disc Pad	Seal Kit	Caliper		Piston	Disc Pad	Seal Kit	Caliper		Piston
					R	L				R	L	
HIACE COMMUTER ハイエース コミューター												
	96.08-98.08	LH115B, 125B	**A1N050**	**SP426**				**Drum**				
3000	98.08-04.08	LH184B, 186B	**A1N050**	**SP426**	A5R007	A5L007		**Drum**				
	07.09-	KDH223B	**A1N119**	**SP426**	A5R007	A5L007		**Drum**				
HIACE TRUCK ハイエース トラック												
1800	88.03-95.05	YH81	**A1N063**	**MP-10**			A9N048	**Drum**				
2000	95.05-96.10	YY101	**A1N063**	**MP-27**			A9N048	**Drum**				
2400	87.08-95.05	LH80, 90	**A1N063**	**MP-10**			A9N048	**Drum**				
	87.10-95.05	LH85, 95	**A1N249**	**SP465**			A9N045	**Drum**				
2800	95.05-96.10	LY101, 111	**A1N063**	**MP-27**			A9N048	**Drum**				
	95.05-96.10	LY151, 161	**A1N249**	**SP465**			A9N045	**Drum**				
HILUX ハイラックス												
1800	88.09-94.08	YN80, 85	**A1N036**	**MP-10**				**Drum**				
2000	94.08-97.08	YN81, 86	**A1N036**	**MP-10**				**Drum**				
	88.09-99.08	YN100, 105, 107, RZN167	**A1N021**	**SP253**	A5R080	A5L080	A9N003	**Drum**				
	97.08-04.07	RZN147, 152H	**A1N049**	**MP-10**			A9N048	**Drum**				
2400	88.09-94.08	LN80, 85	**A1N036**	**MP-10**			A9N048	**Drum**				
	95.08-99.08	LN108, 112, 165, 165H, 170H	**A1N021**	**SP253**	A5R080	A5L080	A9N003	**Drum**				
	17.09-	GUN125	**A1N235**									
2700	99.08-03.08	RZN169H, 174H	**A1N021**	**SP253**	A5R081	A5L081	A9N003	**Drum**				
2800	94.08-97.08	LN81, 86	**A1N036**	**MP-10**			A9N048	**Drum**				
	88.09-97.08	LN100, 106, 107, 109	**A1N021**	**SP253**	A5R080	A5L080	A9N003	**Drum**				
3000	97.08-04.07	LN147	**A1N049**	**MP-10**			A9N048	**Drum**				
	97.08-04.07	LN167, 172H	**A1N021**	**SP253**	A5R081	A5L081	A9N003	**Drum**				
HILUX SURF ハイラックス サーフ												
2400	89.04-91.08	LN130G	**A1N021**	**SP253**	A5R080	A5L080	A9N003	**Drum**				
	91.08-93.08	LN130W	**A1N026**	**SP265**			A9N015	**Drum**				
2700	95.11-02.11	RZN185W (Normal Body)	**A1N029**	**SP210**			A9N016	**Drum**				
	95.11-02.11	RZN180, 185W(Wide Body)	**A1N029**	**SP292**	A5R076	A5L076	A9N016	**Drum**				
	02.11-04.08	RZN210W, 215W	**A1N011**	**SP119**	A5R083	A5L083	A9N016	**A2N012**	**SP120**	A5R047	A5L047	A9N044
	04.08-05.09	TRN210W, 215W	**A1N011**	**SP119**	A5R083	A5L083	A9N016	**A2N012**	**SP120**	A5R047	A5L047	A9N044
	05.09-	TRN210W, 215W	**A1N011**	**SP119A**	A5R083	A5L083	A9N016	**A2N012**	**SP120**	A5R047	A5L047	A9N044
2800	89.04-91.08	LN131V	**A1N021**	**SP253**	A5R080	A5L080	A9N003	**Drum**				
	91.08-93.08	LN131V	**A1N026**	**SP265**			A9N015	**Drum**				
3000	90.08-91.08	VZN130G	**A1N021**	**SP253**	A5R080	A5L080	A9N003	**Drum**				
	91.08-95.11	VZN130G, KZN130G, 130W	**A1N026**	**SP265**			A9N015	**Drum**				
	95.11-00.08	KZN185G	**A1N029**	**SP210**			A9N006	**Drum**				
	95.11-00.08	KZN185W	**A1N029**	**SP292**	A5R076	A5L076	A9N016	**Drum**				
	00.08-02.11	KDN185G	**A1N029**	**SP210**			A9N006	**Drum**				
	00.08-02.11	KDN185W	**A1N029**	**SP292**	A5R076	A5L076	A9N016	**Drum**				
	02.11-05.08	KDN215W	**A1N011**	**SP119**	A5R083	A5L083	A9N016	**A2N012**	**SP120**	A5R047	A5L047	A9N044
3400	95.11-02.11	VZN180W, 185W	**A1N029**	**SP292**	A5R076	A5L076	A9N016	**Drum**				
	02.11-05.08	VZN210W, 215W	**A1N011**	**SP119**	A5R083	A5L083	A9N016	**A2N012**	**SP120**	A5R047	A5L047	A9N044
4000	05.08-05.09	GRN215W	**A1N011**	**SP119**	A5R083	A5L083	A9N016	**A2N012**	**SP120**	A5R047	A5L047	A9N044
	05.09-	GRN215W	**A1N011**	**SP119A**	A5R083	A5L083	A9N016	**A2N012**	**SP120**	A5R047	A5L047	A9N044
HARRIER ハリアー												
2200	97.12-00.11	SXU10W, 15W	**A1N097**	**A-678P**				**SN648P**	**MP-75**			
2400	00.11-01.08	ACU10W, 15W	**A1N097**	**A-678P**				**SN648P**	**MP-75**			A9N063
	01.08-01.11	ACU10W, 15W	**SN893**	**A-678P**				**SN648P**	**MP-75**			A9N063
	01.11-03.02	ACU10W, 15W	**SN893**	**A-678P**				**A2N081**	**MP-75**			A9N063

cc	Year	Body Type	Front					Rear				
			Disc Pad	Seal Kit	Caliper		Piston	Disc Pad	Seal Kit	Caliper		Piston
					R	L				R	L	
HARRIER ハリアー												
	03.02-	ACU30W, 35W	**A1N110**	**A-687P**				**A2N111**	**A-688P**			
3000	97.12-01.08	MCU10W, 15W	**A1N097**	**A-678P**				**SN648P**	**MP-75**			A9N063
	01.08-01.11	MCU10W, 15W	**SN893**	**A-678P**				**SN648P**	**MP-75**			A9N063
	01.11-03.02	MCU10W, 15W	**SN893**	**A-678P**				**A2N081**	**MP-75**			A9N063
	03.02-06.01	MCU30W, 31W, 35W, 36W	**A1N110**	**A-687P**				**A2N111**	**A-688P**			
3500	06.01-	GSU30W, 31W, 35W, 36W	**A1N110**	**A-687P**				**A2N111**	**A-688P**			
HARRIER HV ハリアー HV												
3300	05.03-07.11	MHU38W	**A1N110**	**A-687P**				**A2N111**	**A-688P**			
	07.11-	MHU38W	**A1N110**	**A-687P**				**A2N111**	**A-688P**			
86												
2000	12.03-	AVV65, ZSV6#					A9N052					
	12.03-	ZN6(G, RC)	**F1N018**					**F2N022**				
	12.03-	ZN6(GT)	**F1N018**					**F2N037**				
4RUNNER												
2700	09.08-11.08	TRN28#		**SP004**	A5R086	A5L086	A9N042		**SP259**	A5R045	A5L045	A9N053
4000	09.08-15.05	GRN28#		**SP004**	A5R086	A5L086	A9N042		**SP259**	A5R045	A5L045	A9N053
	15.05-	GRN28#		**SP004**	A5R103	A5L103	A9N042		**SP259**	A5R045	A5L045	A9N053
IQ												
1000	08.11-	KGJ10 (Rear Drum)	**SN956P**	**SP435**				**Drum**				
	08.11-	KGJ10 (Rear Disc)	**SN956P**	**SP435**				**SN938P**	**TP-112**			
1300	09.08-	NGJ10 (Rear Drum)	**SN956P**	**SP435**				**Drum**				
	09.08-	NGJ10 (Rear Disc)	**SN956P**	**SP435**				**SN938P**	**TP-112**			
ISIS アイシス												
1800	04.09-09.09	ZNM10G, 10W	**A1N073**	**SP443**			A9N078	**Drum**				
	09.09-10.09	ZGM10G, 10W	**A1N073**	**SP443**			A9N078	**Drum**				
	10.09-	ZGM10G, 10W	**A1N073**	**SP443**			A9N078	**Drum**				
	09.09-	ZGM15G, 15W	**A1N073**	**SP443**			A9N078	**A2N069**	**SP447**	A5R106	A5L106	A9N061
2000	04.09-09.09	ANM10G, 10W, 15G, 15W	**A1N073**	**SP443**			A9N078	**A2N069**	**SP447**	A5R106	A5L106	A9N061
	09.09-10.09	ZGM11G, 11W	**A1N073**	**SP443**			A9N078	**A2N069**	**SP447**	A5R106	A5L106	A9N061
	10.09-	ZGM11G, 11W	**A1N073**	**SP443**			A9N078	**A2N069**	**SP447**	A5R106	A5L106	A9N061
IPSUM イプサム												
2000	96.05-01.05	SXM10G, 15G	**A1N048**	**SP427**				**Drum**				
2200	97.09-01.05	CXM10G	**A1N048**	**SP427**				**Drum**				
2400	01.05-	ACM21W, 26W	**A1N105**	**A-667P**				**A2N069**	**SP447**	A5R106	A5L106	A9N061
IST イスト												
1300	02.04-07.07	NCP60	**A1N068**	**SP424**	A5R015	A5L015		**Drum**				
1500	02.04-03.01	NCP61	**A1N068**	**SP424**	A5R015	A5L015		**A2N007**	**SP222**			A9N021
	03.01-05.05	NCP61	**A1N068**	**SP424**	A5R015	A5L015		**A2N007**	**SP222**	A5R067	A5L067	A9N021
	02.04-07.07	NCP65	**A1N068**	**SP424**	A5R015	A5L015		**Drum**				
	07.07-	NCP110	**A1N128**	**SP442**	A5R107	A5L107	A9N055	**Drum**				
	07.07-	NCP115	**A1N128**	**SP442**	A5R107	A5L107	A9N055	**SN938P**	**TP-111**			
1800	07.07-	ZSP110	**A1N128**	**SP442**	A5R107	A5L107	A9N055	**Drum**				
JPN TAXI ジャパンタクシー												
1500	07.10-	NTP10	**A1N128**	**SP442**	A5R107	A5L107	A9N055	**Drum**				
KLUGER L/V クルーガー L/V												
2400	00.11-03.08	ACU20W	**A1N103**	**A-658P**				**A2N104**	**MP-100**			
	00.11-03.08	ACU25W	**A1N103**	**A-658P**				**A2N104**	**MP-100**	A5R014	A5L014	
	03.08-07.05	ACU20W	**A1N103**	**A-658P**				**A2N111**				
	03.08-07.05	ACU25W	**A1N103**	**A-658P**				**A2N111**				

TOYOTA

cc	Year	Body Type	Front					Rear				
			Disc Pad	Seal Kit	Caliper		Piston	Disc Pad	Seal Kit	Caliper		Piston
					R	L				R	L	
KLUGER L/V クルーガー L/V												
3000	00.11-03.08	MCU20W	**A1N103**	**A-658P**				**A2N104**	**MP-100**			
	00.11-03.08	MCU25W	**A1N103**	**A-658P**				**A2N104**	**MP-100**	A5R014	A5L014	
	03.08-07.05	MCU20W, 25W	**A1N103**	**A-658P**				**A2N111**				
KLUGER HV クルーガー HV												
3300	05.03-07.05	MHU28W	**A1N110**	**A-687P**				**SN908**	**A-688P**			
LAND CRUISER ランドクルーザー												
3500	90.01-94.01	PZJ70, 70V, 77V, 77HV	**A1N021**	**SP253**	A5R080	A5L080	A9N003	**Drum**				
4000	90.01-92.08	FJ80G	**A1N023**	**SP265**			A9N015	**A2N012**	**SP259**			A9N053
	07.09-	GRJ200	**A1N156**	**SP139**	A5R101	A5L101	A9N039		**SP457**			
	15.08-	GRJ200	**A1N156**	**SP139**	A5R102	A5L102	A9N039		**SP457**			
4200	16.08-	GRJ7#			A5R104	A5L104	A9N006		**SP259**	A5R046	A5L046	A9N053
	90.01-99.08	HZJ70, 70V, 73V, 75, 77V, 77HV(Rear Drum)	**A1N021**	**SP253**	A5R080	A5L080	A9N003	**Drum**				
	90.01-99.08	HZJ70, 70V, 73V, 75, 77V, 77HV(Rear Disc)	**A1N021**	**SP253**	A5R080	A5L080	A9N003	**A2N012**	**SP259**	A5R046	A5L046	A9N053
	90.01-95.06	HZJ81V, HDJ81V (Rear Drum)	**A1N023**	**SP253**	A5R099	A5L099	A9N015	**Drum**				
	95.06-98.01	HZJ81V, HDJ81V (Rear Drum)	**A1N023**	**SP253**	A5R100	A5L100	A9N015	**Drum**				
	92.08-98.01	HZJ81V, HDJ81V (Rear Disc)	**A1N023**	**SP259**	A5R046	A5L046	A9N015	**A2N012**	**SP259**	A5R046	A5L046	A9N053
	98.01-02.08	HDJ101K	**A1N005**	**SP101**	A5R077	A5L077	A9N011 A9N017	**A2N004**	**SP100**	A5R072	A5L072	A9N032
	02.08-07.08	HDJ101K	**A1N005**	**SP101A**	A5R078	A5L078	A9N009 A9N014	**A2N004**	**SP100**	A5R072	A5L072	A9N032
	99.08-04.08	HZJ71, 71V, 74V, 76K, 76V, 79(Rear Drum)	**A1N005**	**SP001**	A5R082	A5L082	A9N006	**Drum**				
	99.08-04.08	HZJ71, 71V, 74V, 76K, 76V, 79(Rear Disc)	**A1N005**	**SP001**	A5R082	A5L082	A9N006	**A2N012**	**SP259**	A5R046	A5L046	
	16.08-	HZJ71, 76, 78, 79			A5R104	A5L104	A9N006		**SP259**	A5R046	A5L046	A9N053
4500	92.08-98.01	FZJ80G	**A1N023**	**SP265**	A5R099	A5L099	A9N015	**A2N012**	**SP259**	A5R046	A5L046	A9N053
	95.06-98.01	FZJ80	**A1N023**	**SP265**	A5R100	A5L100	A9N015	**A2N012**	**SP259**	A5R046	A5L046	A9N053
	07.09-	VDJ200	**A1N156**	**SP139**	A5R101	A5L101	A9N039		**SP457**			
	15.08-18.07	VDJ200	**A1N156**	**SP139**	A5R102	A5L102	A9N039		**SP457**			
	16.08-	VDJ7#			A5R104	A5L104	A9N006		**SP259**	A5R046	A5L046	A9N053
4600	09.05-15.10	URJ202W	**A1N156**	**SP139**	A5R084	A5L084	A9N039	**A2N159**	**SP457**	A5R048	A5L048	A9N034
	07.09-	URJ202	**A1N156**	**SP139**	A5R101	A5L101	A9N039		**SP457**			
	15.08-	URJ202	**A1N156**	**SP139**	A5R102	A5L102	A9N039		**SP457**			
4700	98.01-07.08	UZJ100W	**A1N005**	**SP101**	A5R077	A5L077	A9N011 A9N017	**A2N004**	**SP100**	A5R072	A5L072	A9N032
	07.09-09.05	UZJ200W	**A1N156**	**SP139**	A5R084	A5L084	A9N039	**A2N159**	**SP457**	A5R048	A5L048	A9N034
5700	07.09-	URJ200	**A1N156**	**SP139**	A5R101	A5L101	A9N039		**SP457**			
	15.08-	URJ200	**A1N156**	**SP139**	A5R102	A5L102	A9N039		**SP457**			
LAND CRUISER PRADO ランドクルーザー プラド												
2400	90.04-93.05	LJ71G	**SN274P**	**SP217**	A5R073	A5L073	A9N004 A9N001	**A2N012**	**SP259**	A5R046	A5L046	
	90.04-93.05	LJ71G	**SN274P**	**SP217**	A5R073	A5L073	A9N001	**A2N012**	**SP259**	A5R046	A5L046	
	90.04-93.05	LJ78G, 78W	**A1N021**	**SP253**	A5R080	A5L080	A9N003	**A2N012**	**SP259**	A5R046	A5L046	
2700	97.04-02.09	RZJ90W, 95W	**A1N029**	**SP292**	A5R076	A5L076	A9N016	**A2N012**	**SP259**	A5R046	A5L046	
	02.09-04.08	RZJ120W, 125W	**A1N011**	**SP119**	A5R075	A5L075	A9N016	**A2N012**	**SP259**	A5R045	A5L045	
	04.08-05.09	TRJ120W, 125W	**A1N011**	**SP119**	A5R075	A5L075	A9N016	**A2N012**	**SP259※1**	A5R045	A5L045	A9N053
	05.09-	TRJ120W, 125W	**A1N011**	**SP119A**	A5R075	A5L075	A9N016	**A2N012**	**SP259※1**	A5R045	A5L045	A9N053
	09.09-	TRJ150W	**A1N011**	**SP004**			A9N042	**A2N012**	**SP259**	A5R045	A5L045	A9N053
	09.08-15.05	TRJ150		**SP004**	A5R086	A5L086	A9N042		**SP259**	A5R045	A5L045	A9N053
	15.05-	TRJ150		**SP004**	A5R103	A5L103	A9N042		**SP259**	A5R045	A5L045	A9N053
2800	15.05-	GDJ15#		**SP004**	A5R103	A5L103	A9N042		**SP259**	A5R045	A5L045	A9N053

※VSC…Vehicle Stability Control
※1 TRJ125W(07.07～) Rear Seal Kit SP120

cc	Year	Body Type	Front					Rear				
			Disc Pad	Seal Kit	Caliper		Piston	Disc Pad	Seal Kit	Caliper		Piston
					R	L				R	L	
LAND CRUISER PRADO ランドクルーザー プラド												
3000	93.05-96.04	KZJ71G, 71W, 78G, 78W	**A1N021**	**SP253**	A5R080	A5L080	A9N003	**A2N012**	**SP259**	A5R046	A5L046	A9N053
	96.04-02.11	KZJ90W, 95W, KDJ90W, 95W	**A1N029**	**SP292**	A5R076	A5L076	A9N016	**A2N012**	**SP259**	A5R046	A5L046	A9N053
	02.11-05.09	KDJ120W, 121W, 125W	**A1N011**	**SP119**	A5R075	A5L075	A9N016	**A2N012**	**SP259**	A5R045	A5L045	A9N053
	05.09-07.07	KDJ120W, 121W, 125W	**A1N011**	**SP119A**	A5R075	A5L075	A9N016	**A2N012**	**SP259**	A5R045	A5L045	A9N053
	09.08-15.05	KDJ15#		**SP004**	A5R086	A5L086	A9N042		**SP259**	A5R045	A5L045	A9N053
	15.05-	KDJ150		**SP004**	A5R103	A5L103	A9N042		**SP259**	A5R045	A5L045	A9N053
	09.08-15.05	LJ150		**SP004**	A5R086	A5L086	A9N042		**SP259**	A5R045	A5L045	A9N053
	15.05-	LJ150		**SP004**	A5R103	A5L103	A9N042		**SP259**	A5R045	A5L045	A9N053
3400	96.04-02.09	VZJ90W, 95W	**A1N029**	**SP292**	A5R076	A5L076	A9N016	**A2N012**	**SP259**	A5R046	A5L046	
	02.09-05.08	VZJ120W, 121W, 125W	**A1N011**	**SP119**	A5R075	A5L075	A9N016	**A2N012**	**SP259**	A5R045	A5L045	
4000	05.08-05.09	GRJ120W, 121W	**A1N011**	**SP119**	A5R075	A5L075	A9N016	**A2N012**	**SP259**	A5R045	A5L045	A9N053
	05.09-	GRJ120W, 121W	**A1N011**	**SP119A**	A5R075	A5L075	A9N016	**A2N012**	**SP259**	A5R045	A5L045	A9N053
	09.09-	GRJ150W, 151W	**A1N011**	**SP004**			A9N042	**A2N012**	**SP259**	A5R045	A5L045	A9N053
	13.08-	GRJ15#		**SP004**	A5R103	A5L103	A9N042		**SP259**	A5R045	A5L045	A9N053
	09.08-15.05	GRJ150		**SP004**	A5R086	A5L086	A9N042		**SP259**	A5R045	A5L045	A9N053
LITE/TOWN ACE NOAH ライト/タウンエース ノア												
1500	88.08-92.01	KM30G	**A1N078**	**C-124P**				**Drum**				
1800	88.08-92.01	YR20G, 28G, YM30G	**A1N078**	**C-226P**				**Drum**				
	88.08-92.01	YM30G	**A1N078**	**C-124P**				**Drum**				
2000	88.08-92.01	CM30G	**A1N078**	**C-124P**				**Drum**				
	88.08-92.01	YM40G, CM40G	**SN825P**	**C-124P**				**Drum**				
	88.08-92.01	CR21G, 28G, YR21G	**A1N078**	**C-226P**				**Drum**				
	92.01-96.10	CR21G, 28G, YR21G	**SN827P**	**A-379P**				**Drum**				
	88.08-92.01	CR30G, 31G, 37G, 38G, YR30G, 36G	**A1N083**	**A-239P**				**Drum**				
	92.01-96.10	CR30G, 31G, 37G, 38G, YR30G, 36G	**SN826P**	**A-239P**				**Drum**				
	96.10-01.11	SR40G	**A1N096**	**A-379P**				**Drum**				
	96.10-98.12	SR50G	**SN851P**	**A-379P**				**Drum**				
	98.12-01.11	SR50G (6-passenger)	**SN851P**	**A-379P**				**Drum**				
	98.12-01.11	SR50G (7, 8-passenger)	**A1N096**	**A-379P**				**Drum**				
2200	93.09-96.10	CR22G, 29G	**SN827P**	**A-379P**				**Drum**				
	96.10-01.11	CR40G	**A1N096**	**A-379P**				**Drum**				
	96.10-98.12	CR50G	**SN851P**	**A-379P**				**Drum**				
	98.12-01.11	CR50G	**A1N096**	**A-379P**				**Drum**				
LITE/TOWN ACE VAN ライト/タウンエース バン												
1500	88.08-92.01	KM31V, 36V	**A1N078**	**C-124P**				**Drum**				
	90.08-92.01	KR27V	**A1N078**	**C-226P**				**Drum**				
	92.01-96.10	KR27V	**SN827P**	**A-379P**				**Drum**				
	96.11-98.12	KR41V	**A1N096**	**A-379P**				**Drum**				
	08.02-	S402, S412	**SN955**					**Drum**				
1800	90.08-92.01	YM31V	**A1N078**	**C-124P**				**Drum**				
	88.08-92.01	YR25V	**A1N078**	**C-226P**				**Drum**				
	92.01-96.10	YR25V	**SN827P**	**A-379P**				**Drum**				
	96.11-07.08	KR42V	**A1N096**	**A-379P**				**Drum**				
	04.12-07.08	KR52V	**SN851P**	**A-379P**				**Drum**				
2000	88.08-92.01	CM31V, 36V	**A1N078**	**C-124P**				**Drum**				
	88.08-92.01	CM41V	**SN825P**	**C-124P**				**Drum**				
	88.08-92.01	CR27V	**A1N078**	**C-226P**				**Drum**				
	92.01-96.10	CR27V	**SN827P**	**A-379P**				**Drum**				
	88.08-92.01	CR36V	**A1N083**	**A-239P**				**Drum**				

TOYOTA

cc	Year	Body Type	Front					Rear				
			Disc Pad	Seal Kit	Caliper		Piston	Disc Pad	Seal Kit	Caliper		Piston
					R	L				R	L	
LITE/TOWN ACE VAN ライト/タウンエース バン												
	92.01-96.10	CR36V	**SN826P**	**A-239P**				**Drum**				
	96.11-98.12	CR41V	**A1N096**	**A-379P**				**Drum**				
	96.11-98.12	CR51V	**SN851P**	**A-379P**				**Drum**				
2200	98.12-04.07	CR42V	**A1N096**	**A-379P**				**Drum**				
	98.12-04.07	CR52V	**SN851P**	**A-379P**				**Drum**				
LITE/TOWN ACE Truck ライト/タウンエース トラック												
1500	86.10-88.08	KM51		**C-226P**				**Drum**				
	88.08-99.06	KM51	**A1N078**	**C-226P**				**Drum**				
	08.02-	S402, S412	**SN955**					**Drum**				
1800	86.10-88.08	YM60, 65		**C-226P**				**Drum**				
	88.08-99.06	YM60, 65	**SN825P**	**C-226P**				**Drum**				
	86.10-88.08	YM55		**C-226P**				**Drum**				
	88.08-99.06	YM55	**A1N078**	**C-226P**				**Drum**				
	99.06-07.08	KM70	**A1N096**	**A-379P**				**Drum**				
	99.06-07.08	KM75 (Single Just low)	**SN897P**	**A-379P**				**Drum**				
	99.06-07.08	KM75	**A1N096**	**A-379P**				**Drum**				
	99.06-07.08	KM80, 85	**SN897P**	**A-379P**				**Drum**				
2000	86.10-88.08	CM51, 55		**C-226P**				**Drum**				
	88.08-99.06	CM51, 55	**A1N078**	**C-226P**				**Drum**				
	91.10-99.06	CM52, 61	**SN825P**	**C-226P**				**Drum**				
	86.10-88.08	CM60, 65		**C-226P**				**Drum**				
	88.08-99.06	CM60, 65	**SN825P**	**C-226P**				**Drum**				
	94.04-99.06	CM55	**SN827P**	**A-379P**				**Drum**				
	96.11-99.06	CM65	**SN826P**	**A-239P**				**Drum**				
2200	99.06-04.08	CM70	**A1N096**	**A-379P**				**Drum**				
	99.06-04.08	CM75 (Single Just Low)	**SN897P**	**A-379P**				**Drum**				
	99.06-04.08	CM75	**A1N096**	**A-379P**				**Drum**				
	99.06-04.08	CM80	**SN897P**	**A-379P**				**Drum**				
	99.06-02.08	CM85(Tower Wagon, YAMATO ver)	**A1N085**	**C-379P**				**Drum**				
	99.06-04.08	CM85	**SN897P**	**A-379P**				**Drum**				
MARKⅡ マークⅡ												
1800	92.10-96.09	SX90	**A1N048**	**SP255**			A9N027	**A2N057**	**SP263**			A9N023
2000	92.10-96.09	GX90	**A1N048**	**SP255**			A9N027	**A2N057**	**SP263**			A9N023
	96.09-98.08	GX100	**A1N048**	**SP204**			A9N031	**A2N030**	**SP295**			A9N035
	98.08-00.10	GX100	**A1N006**	**SP102**			A9N041	**A2N030**	**SP295**			A9N035
	98.08-00.10	GX105	**A1N041**	**SP449**				**A2N059**	**MP-73**			
	00.10-04.11	GX110	**SN680**	**SP440**			A9N065	**A2N099**	**SP441**			
	00.10-04.11	GX115	**A1N041**	**SP440**			A9N064	**A2N099**	**SP441**			A9N066
2400	92.10-96.09	LX90	**A1N048**	**SP255**			A9N027	**A2N057**	**SP263**			A9N066
	96.09-98.08	LX100	**A1N048**	**SP204**			A9N031	**A2N030**	**SP295**			A9N035
	98.08-99.08	LX100	**A1N006**	**SP102**			A9N041	**A2N030**	**SP295**			A9N035
2500	92.10-95.09	JZX90	**A1N041**	**MP-50**			A9N092	**A2N057**	**SP263**			
	95.09-96.09	JZX90	**A1N041**	**MP-50**			A9N092	**A2N057**	**MP-67**			A9N061
	92.10-96.09	JZX93	**A1N041**	**MP-50**			A9N092	**A2N057**	**SP263**			A9N061
	95.09-96.09	JZX93	**A1N041**	**MP-50**			A9N092	**A2N057**	**MP-67**			A9N061
	92.10-93.04	JZX90 (Turbo)	**A1N056**	**MP-47**				**A2N057**				A9N061
	93.04-96.09	JZX90 (Turbo)	**A1N056**	**MP-47**				**A2N057**				A9N029
	96.09-00.10	JZX100 , JZX105	**A1N041**	**SP449**				**A2N059**	**MP-73**			
	96.09-00.10	JZX100 (Turbo)	**A1N056**	**MP-47**				**A2N030**	**SP293**			A9N036

cc	Year	Body Type	Front					Rear				
			Disc Pad	Seal Kit	Caliper		Piston	Disc Pad	Seal Kit	Caliper		Piston
					R	L				R	L	
MARK Ⅱ マークⅡ												
	00.10-04.11	JZX110	**SN680**	**SP440**			A9N065	**A2N099**	**SP441**			
	00.10-04.11	JZX110 (Turbo)	**A1N056**	**MP-77**				**A2N099**	**SP441**			A9N066
	00.10-04.11	JZX115	**A1N041**	**SP440**			A9N065	**A2N099**	**SP441**			A9N066
3000	92.10-95.09	JZX91	**A1N041**	**MP-50**			A9N092	**A2N057**	**SP263**			A9N066
	95.09-96.09	JZX91	**A1N041**	**MP-50**			A9N092	**A2N059**	**MP-67**			
	96.09-00.10	JZX101	**A1N041**	**SP449**				**A2N059**	**MP-73**			
MARK Ⅱ WAGON/ MARK Ⅱ BLIT マークⅡ ワゴン/ マークⅡ ブリット												
2000	88.10-97.04	GX70G	**A1N016**	**SP229**			A9N024	**Drum**				
	02.01-07.06	GX110W	**SN680**	**SP440**			A9N065	**A2N099**	**SP441**			
	02.01-07.06	GX115W	**A1N041**	**SP440**				**A2N099**	**SP441**			
2200	97.04-99.08	SXV20W	**A1N048**	**MP-50**				**SN648P**	**SP467**			
	99.08-01.12	SXV20W	**A1N048**	**MP-50**				**A2N066**	**SP463**			
	97.06-01.09	SXV25	**A1N097**	**A-678P**				**SN648P**	**SP467**			A9N062
2500	97.04-99.08	MCV21W	**A1N097**	**A-678P**				**SN648P**	**SP467**			
	99.08-01.12	MCV21W	**A1N097**	**A-678P**				**A2N066**	**SP463**			
	97.06-01.12	MCV25W	**A1N097**	**A-678P**				**SN648P**	**SP467**			
	02.01-07.06	JZX110W	**SN680**	**SP440**				**A2N099**	**SP441**			
	02.01-06.04	JZX110W (Turbo)	**A1N056**	**MP-77**				**A2N099**	**SP441**			
	02.01-07.06	JZX115W	**A1N041**	**SP440**				**A2N099**	**SP441**			
3000	97.04-99.08	MCV20W	**A1N097**	**A-678P**				**SN648P**	**SP467**			
	99.08-01.12	MCV20W	**A1N097**	**A-678P**				**A2N066**	**SP463**			
MARK Ⅱ VAN マークⅡ バン												
1800	84.11-93.02	YX76V	**A1N016**	**SP229**			A9N024	**Drum**				
2000	93.02-97.04	YX78V	**A1N016**	**SP229**			A9N024	**Drum**				
2400	84.11-94.09	LX76V	**A1N016**	**SP229**			A9N024	**Drum**				
MARK X マーク X												
2500	04.11-05.11	GRX120 (18inch)	**A1N073**	**SP445**			A9N065	**A2N118**	**SP418**			A9N081
	05.11-	GRX120 (18inch)	**A1N073**	**SP445**			A9N065	**A2N118**	**SP422**			A9N081
	04.11-05.11	GRX120, 125	**A1N140**	**SP445**			A9N065	**A2N118**	**SP417**			A9N081
	05.11-07.09	GRX120, 125	**A1N140**	**SP445**			A9N065	**A2N118**	**SP415**			A9N081
	09.10-14.06	GRX130, 135	**A1N140**	**SP445**			A9N065	**A2N118**	**SP415**			A9N081
	14.07-	GRX130, 135	**A1N140**	**SP445**			A9N065	**★A2N226**	**SP462**			A9N081
3000	04.11-05.11	GRX121 (18inch)	**A1N073**	**SP445**			A9N065	**A2N118**	**SP418**			A9N081
	05.11-	GRX121 (18inch)	**A1N073**	**SP445**			A9N065	**A2N118**	**SP421**			A9N081
	04.11-05.11	GRX121	**A1N140**	**SP445**			A9N065	**A2N118**	**SP417**			A9N081
	05.11-	GRX121	**A1N140**	**SP445**			A9N065	**A2N118**	**SP415**			A9N081
3500	09.10-13.09	GRX133	**A1N166**	**SP112**	A5R079	A5L079	A9N010	**A2N118**	**SP412**			A9N082
	13.09-	GRX133	**A1N166**	**SP112**			A9N010	**★A2N226**				A9N082
MARK X ZiO マーク X ZiO												
2400	07.09-11.07	ANA1#	**A1N129**	**SP135**	A5R043	A5L043	A9N052	**A2N130**	**SP134**			A9N085
	11.07-	ANA1#	**A1N129**	**SP135**	A5R043	A5L043	A9N052	**A2N130**	**SP422**			
3500	07.09-11.07	GGA10	**A1N129**	**SP135**	A5R043	A5L043	A9N052	**A2N130**	**SP134**			
	11.07-	GGA10	**A1N129**	**SP135**	A5R043	A5L043	A9N052	**A2N130**	**SP422**			A9N085
MEGA CRUISER メガクルーザー												
4100	96.01-01.10	BXD20V		**SP265**			A9N015		**SP217**			A9N001
MIRAI ミライ												
-	14.12-	JPD10	**A1N129**	**SP135**			A9N052	**A2N194**				A9N081
MR 2												
2000	89.12-91.12	SW20		**MP-44**				**A2N044**	**A-321P**			

★発売予定

TOYOTA

cc	Year	Body Type	Front					Rear				
			Disc Pad	Seal Kit	Caliper		Piston	Disc Pad	Seal Kit	Caliper		Piston
					R	L				R	L	
MR 2												
	91.12-99.08	SW20	**A1N053**	**MP-44**				**A2N044**				
MR-S												
1800	99.10-02.08	ZZW30	**A1N068**	**SP424**	A5R017	A5L017		**A2N044**	**B-321P**			
	02.08-	ZZW30	**A1N068**	**SP424**	A5R017	A5L017		**A2N044**	**B-321P**			
NADIA ナディア												
2000	98.07-02.08	SXN10, 10H, 15, 15H	**A1N097**	**A-678P**				**Drum**				
	01.04-03.07	ACN10, 10H, 15, 15H	**A1N097**	**A-678P**				**Drum**				
NOAH/VOXY ノア/ヴォクシー												
1800	14.02-	ZWR80	**SN138**	**SP135**				**★A2N228**	**SP433**			
2000	01.11-07.06	AZR60G, 65G	**A1N105**	**A-667P**				**Drum**				
	07.06-11.04	ZRR70W, 75W, 70G, 75G	**A1N128**	**SP135**			A9N052	**A2N069**	**SP405**	A5R011	A5L011	A9N086
	11.04-	ZRR70W, 75W, 70G, 75G	**A1N128**	**SP135**			A9N052	**A2N069**	**SP405**	A5R011	A5L011	
	14.01-	ZRR80, 85G	**A1N128**	**SP135**			A9N052	**★A2N228**	**SP433**			A9N086
	16.05-17.06	ZRR80W (G's)	**SN138**	**SP135**				**★A2N228**	**SP433**			A9N086
OPA オーパ												
1800	00.04-05.04	ZCT10 (Rear Drum)	**A1N068**	**MP-104**	A5R016		A9N056	**Drum**				
	02.05-05.04	ZCT10 (Rear Disc)	**A1N065**	**SP427**	A5R012	A5L012		**A2N066**	**SP465**			
	00.04-05.04	ZCT15 (Rear Drum)	**A1N065**	**SP427**				**Drum**				
	02.05-05.04	ZCT15 (Rear Disc)	**A1N065**	**SP427**	A5R012	A5L012		**A2N066**	**SP465**			
2000	00.08-02.05	ACT10 (AType)	**A1N068**	**MP-104**	A5R016		A9N056	**Drum**				
	00.08-05.04	ACT10 (Itype-Rear Drum)	**A1N065**	**SP427**				**Drum**				
	02.05-05.04	ACT10 (Itype-Rear Dics)	**A1N065**	**SP427**	A5R012	A5L012		**A2N066**	**SP465**			
PASSO パッソ												
1000	04.06-10.02	KGC10, 15	**SN943P**	**TP-80**				**Drum**				
	10.02-	KGC30, 35	**SN943P**	**TP-80**				**Drum**				
	10.02-	KGC30 (Hana)	**SN943P**	**TP-80**				**Drum**				
	10.02-	KGC35 (Hana)	**A1N197**	**TP-103**				**Drum**				
	16.04-	M700A(2WD)	**SN949P**									
	16.04-	M710A(4WD)	**SN949P**									
1300	04.06-	QNC10	**SN943P**	**TP-80**				**Drum**				
	10.02-	NGC30	**SN943P**	**TP-80**				**Drum**				
PASSO SETTE パッソ セッテ												
1500	08.12-	M502E	**A1N155**	**MP-119**				**Drum**				
	08.12-	M502E (VSC) , M512E	**SN939**	**MP-120**				**Drum**				
PICNIC ピクニック												
2000	02.06-09.12	ACM20	**A1N105**	**A-667P**				**A2N069**	**SP447**	A5R106	A5L106	A9N061
PIXIS EPOC ピクシス エポック												
660	12.05-	LA300A, 310A	**D1N046**	**C-608P**				**Drum**				
PIXIS SPACE ピクシス スペース												
660	11.09-	L575A	**D1N046**	**C-608P**				**Drum**				
	11.09-	L585A	**D1N046**	**C-608P**				**Drum**				
	11.09-11.11	L585A (RS)	**SN943P**	**TP-115**				**Drum**				
	11.11-	L585A (RS)	**SN943P**	**TP-115**				**Drum**				
PIXIS VAN/Truck ピクシス バン/トラック												
660	11.11-	S321, 331	**SN145P**	**SP129**			G9N003	**Drum**				
	11.11-	S201, 211	**SN103P**	**SP129**			G9N003	**Drum**				
	14.09-	S500, 510	**SN103P**	**SP129**			G9N003	**Drum**				
PIXIS MEGA ピクシス メガ												
660	15.07-	LA700A, LA710A		**TP-115**				**Drum**				

★発売予定

※VSC…Vehicle Stability Control

cc	Year	Body Type	Front					Rear				
			Disc Pad	Seal Kit	Caliper		Piston	Disc Pad	Seal Kit	Caliper		Piston
					R	L				R	L	
PLATZ プラッツ												
1000	99.08-05.12	SCP11	**A1N067**	**SP424**				**Drum**				
1300	99.08-05.12	NCP16	**A1N067**	**SP424**				**Drum**				
1500	99.08-05.12	NCP12	**A1N067**	**SP424**				**Drum**				
PORTE / SPADE ポルテ / スペイド												
1300	04.07-04.09	NNP10	**A1N068 ※1**	**SP432**	A5R018	A5L018	A9N058	**Drum**				
	04.09-	NNP10	**SN130P**	**SP432**	A5R018	A5L018	A9N058	**Drum**				
	12.07-	NSP140	**A1N155**	**SP434**	A5R009	A5L009		**Drum**				
1500	04.07-04.09	NNP11	**A1N068 ※1**	**SP432**	A5R018	A5L018	A9N058	**Drum**				
	04.09-	NNP11	**SN130P**	**SP432**	A5R018	A5L018	A9N058	**Drum**				
	06.01-	NNP15	**SN130P**	**SP432**	A5R018	A5L018	A9N058	**Drum**				
	12.07-	NCP141	**A1N155**	**SP434**	A5R009	A5L009		**Drum**				
	12.07-	NCP145	**SN939**	**SP455**			A9N088	**Drum**				
PRIUS プリウス												
1500	97.12-00.05	NHW10	**A1N048**	**SP453**				**Drum**				
	01.08-03.08	NHW11 (Euro Package)	**A1N068**	**SP409**	A5R016	A5L016		**A2N007**	**SP106**	A5R070	A5L070	A2N020
	00.05-03.08	NHW11	**A1N068**	**SP432**	A5R013	A5L013	A9N058	**Drum**				
	03.08-11.12	NHW20	**A1N068**	**SP481**	A5R031	A5L031	A9N080	**Drum**				
1800	09.05-	ZVW30	**A1N192**	**SP437**	A5R091	A5L091	A9N089	**A2N196**	**TP-111**			
	15.11-	ZVW5#			A5R091	A5L091						
PRIUS (EU Application) プリウス												
1800	03.08-04.08	NHW20			A5R031	A5L031		**A2N007**		A5R071	A5L071	
	04.08-09.03	NHW20							**MP-98**			
PRIUS PHV プリウスPHV												
1800	11.12-	ZVW35	**A1N192**	**SP437**	A5R091	A5L091	A9N089	**A2N196**	**TP-111**			
PRIUSα プリウスα												
1800	11.04-11.05	ZVW40W, 41W	**A1N128**	**SP135**			A9N052	**A2N194**				A9N083
	11.05-	ZVW40W, 41W	**A1N128**	**SP135**			A9N052		**SP414**			A9N083
PROGRES プログレ												
2500	98.05-01.04	JCG10	**A1N041**	**SP440**			A9N065	**A2N099**	**MP-80**			
	01.04-07.06	JCG10	**SN680**	**SP440**			A9N065	**A2N099**	**MP-80**			
	99.12-07.06	JCG15	**A1N041**	**SP440**			A9N065	**A2N099**	**MP-80**			
3000	98.05-01.04	JCG11	**A1N041**	**SP440**			A9N065	**A2N099**	**MP-80**			
	01.04-07.06	JCG11	**SN680**	**SP440**			A9N065	**A2N099**	**MP-80**			
PRONARD プロナード												
3000	00.02-03.01	MCX20	**A1N097**	**A-678P**								
PROBOX プロボックス												
1300	02.06-	NCP50V	**A1N067**	**SP432**	A5R015	A5L015		**Drum**				
	14.09-	NSP160V	**A1N155**	**SP434**	A5R009	A5L009						
1400	02.06-07.08	NLP51V	**A1N067**	**SP432**	A5R015	A5L015		**Drum**				
1500	02.06-	NCP51V, 52V, 55V, 58G, 59G	**A1N067**	**SP432**	A5R015	A5L015		**Drum**				
	02.06-09.12	NCP58G, 59G	**A1N067**	**SP432**	A5R015	A5L015		**Drum**				
	09.12-	NCP58G, 59G(14inch)	**A1N068**	**SP424**	A5R015	A5L015		**Drum**				
	09.12-	NCP58G, 59G	**A1N067**	**MP-95**	A5R015	A5L015		**Drum**				
	14.09-	NCP160V, 165V	**A1N155**	**SP434**			A9N087					
QUICK DELIVERY/ URBAN SUPPORTER クイックデリバリー/アーバンサポーター												
2400	88.08-95.05	LH80VH (Delux ver)	**A1N063**	**MP-10**			A9N048	**Drum**				
	88.08-95.05	LH80VH (Delivery ver)	**A1N049**	**MP-10**				**Drum**				
	87.11-95.05	LH85	**A1N249**	**SP465**			A9N045	**Drum**				
2700	96.10-99.08	RZU68VH (LPG)	**SN650**	**MP-17**			A9N045	**Drum**				

※1 There are cases where it is SN130P depending on the shape of the SIM.

TOYOTA

cc	Year	Body Type	Front					Rear				
			Disc Pad	Seal Kit	Caliper		Piston	Disc Pad	Seal Kit	Caliper		Piston
					R	L				R	L	
QUICK DELIVERY/URBAN SUPPORTER クイックデリバリー/アーバンサポーター												
	00.01-03.06	BU280K (LPG)	**A1N102**	**SP438**				**Drum**				
	03.06-06.10	RZU280K, XZU281K (LPG)	**A1N102**	**SP438**				**Drum**				
2800	95.05-99.05	LH81VH (Delivery ver)	**A1N063**	**MP-10**				**Drum**				
	95.05-99.05	LY151	**A1N249**	**SP465**			A9N045	**Drum**				
3000	99.05-01.08	LH82K	**A1N063**	**MP-10**				**Drum**				
	99.05-04.07	LY152, 228K, 270	**A1N249**	**SP465**			A9N045	**Drum**				
3400	95.05-99.05	BU68VH	**SN650**	**MP-17**			A9N045	**Drum**				
3700	99.08-04.06	BU280K, 281K	**A1N102**	**SP438**				**Drum**				
	01.08-04.07	LY228, 270			A5R090	A5L090		**Drum**				
4000	04.06-06.10	XZU280K, 281K	**A1N102**	**SP438**				**Drum**				
	06.10-	XKU280K (Delux ver)	**A1N102**	**SP438**				**Drum**				
RACTIS ラクティス												
1300	05.09-	SCP100	**SN939**	**SP455**			A9N088	**Drum**				
	10.11-	NSP120, 122	**SN939**	**SP455**				**Drum**				
1500	05.09-06.12	NCP100 (S Package)	**SN939**	**SP455**			A9N088	**SN938P**	**TP-99A**			
	06.12-	NCP100 (S Package)	**SN939**	**SP455**			A9N088	**SN938P**	**TP-112**			
	05.09-	NCP100 , NCP105	**SN939**	**SP455**			A9N088	**Drum**				
	10.11-	NCP120, 122, 125	**SN939**	**SP455**			A9N088	**SN938P**	**TP-112**			
RAUM ラウム												
1500	97.05-03.04	EXZ10, 15	**A1N034**	**MP-15**				**Drum**				
	03.04-04.09	NCZ20, 25	**A1N068※**	**SP432**	A5R018	A5L018	A9N058	**Drum**				
	04.09-	NCZ20, 25	**SN130P**	**SP432**	A5R018	A5L018	A9N058	**Drum**				
RAV4												
1800	00.05-05.11	ZCA25W, 26W (Rear Drum)	**A1N008**	**SP102**	A5R044	A5L044	A9N041	**Drum**				
	00.05-05.11	ZCA25W, 26W (Rear Disc)	**A1N008**	**SP102**	A5R044	A5L044	A9N041	**A2N031**	**SP294**	A5R069	A5L069	A9N019
2000	94.04-00.05	SXA10G, 11G	**A1N048**	**SP290**			A9N030	**Drum**				
	96.08-97.09	SXA10W, 11W (G ver)	**A1N048**	**SP290**			A9N030	**Drum**				
	97.09-00.05	SXA10W, 11W (G ver)	**A1N048**	**SP290**			A9N030	**A2N031**	**SP294**			A9N019
	97.09-00.05	SXA10W, 11W (X ver)	**A1N048**	**SP290**			A9N030	**Drum**				
	97.09-00.05	SXA10C, 15G, 16G	**A1N048**	**SP290**			A9N030	**Drum**				
	00.05-05.11	ACA20W, 21W (Rear Drum)	**A1N008**	**SP102**	A5R044	A5L044	A9N041	**Drum**				
	03.07-05.11	ACA20W, 21W (Rear Disc)	**A1N008**	**SP102**	A5R044	A5L044	A9N041	**A2N031**	**SP294**	A5R069	A5L069	A9N019
2400	05.11-11.06	ACA31W, 36W	**A1N129**	**SP135**	A5R043	A5L043	A9N052	**A2N130**	**SP134**	A5R030	A5L030	A9N085
	11.06-12.12	ACA31W, 36W	**A1N129**	**SP135**	A5R043	A5L043	A9N052	**A2N130**	**SP422**			
RAV4L EV												
EM	96.08-	ECA10G, BEA11G	**A1N048**	**SP290**				**Drum**				
RUSH ラッシュ												
1500	06.01-	J200E, 210E	**G1N005**	**SP297**	G5R001	G5L001	G9N002	**Drum**				
	06.01-	J200E, 210E (VSC)	**G1N005**	**SP297A**	G5R001	G5L001	G9N002	**Drum**				
SAI サイ												
2400	09.12-11.07	AZK10	**A1N128**	**SP135**			A9N052		**SP134**			
	11.07-	AZK10	**A1N128**	**SP135**			A9N052		**SP422**			
SCEPTER セプター												
2200	00.03-01.09	SXV25N	**A1N097**	**A-678P**				**SN648P**	**SP467**			
3000	92.11-96.08	VCV10	**A1N041**	**MP-50**			A9N092	**SN648P**	**SP467**			
	92.07-94.08	VCV15, 15W	**A1N041**	**MP-50 ※2**				**SN648P**	**SP467 ※2**			
	94.08-96.07	VCV15, 15W(Coupe)	**A1N041**	**C-322P**			A9N094	**SN648P**	**SP467**			
	94.08-96.07	VCV15, 15W(Wagon)	**A1N041**	**C-322P**			A9N094		**MP-76**			

※2 VCV15W:GPackage(93.09~94.08) Fr=Seal Kit C-322P Rr= MP-76

cc	Year	Body Type	Front					Rear				
			Disc Pad	Seal Kit	Caliper		Piston	Disc Pad	Seal Kit	Caliper		Piston
					R	L				R	L	
SERA セラ												
1500	90.03-95.12	EXY10	**A1N034**	**MP-15**				**Drum**				
	90.03-95.12	EXY10 (ABS)	**A1N034**	**MP-15**				**A2N040**	**MP-23**			
SIENNA シエナ												
2700	10.01-13.08	ASL30						**A2N194**				
3500	11.09-	GSL3#						**A2N194**				
SIENTA シエンタ												
1500	03.09-04.10	NCP81G, 85G	**A1N068※**	**SP409**			A9N056	**Drum**				
	04.10-11.09	NCP81G, 85G	**SN130P**	**SP409**			A9N056	**Drum**				
	11.09-	NCP81G, 85G	**SN130P**	**SP409**			A9N056	**Drum**				
	15.06-	NSP170G, NCP175, NHP170	**A1N128**	**SP442**	A5R107	A5L107	A9N055		**SP483**			
SOARER ソアラ												
2500	91.05-92.04	JZZ30 (15inch)	**A1N041**	**MP-37**				**A2N084**	**MP-43**			
	91.05-94.01	JZZ30 (16inch)	**A1N054**	**MP-37**				**A2N084**	**MP-43**			
	94.01-00.12	JZZ30 (16inch)	**A1N054**	**MP-37**				**A2N059**	**MP-43**			
3000	92.04-99.08	JZZ31 (15inch)	**A1N041**	**MP-37**				**A2N084**	**MP-43**			
	96.08-00.12	JZZ31 (16inch)	**A1N054**	**MP-37**				**A2N059**	**MP-43**			
4000	91.05-97.09	UZZ30, 31	**A1N041**	**MP-37**				**A2N084**	**MP-43**			
	91.05-94.01	UZZ32	**A1N054**	**MP-37**				**A2N084**	**MP-43**			
	94.01-96.08	UZZ32	**A1N054**	**MP-37**				**A2N059**	**MP-43**			
4300	01.04-05.08	UZZ40	**A1N056**	**MP-77**	A5R022	A5L022		**A2N099**	**MP-80**			
SPARKY スパーキー												
1300	00.09-02.06	S221E, 231E	**G1N011**	**MP-59**				**Drum**				
	02.06-03.03	S221E, 231E	**SN902P**	**MP-59**				**Drum**				
SPADE スペイド												
1300	12.07-	NSP140	**A1N155**	**SP434**				**Drum**				
1500	12.07-	NCP141	**A1N155**	**SP434**				**Drum**				
SPRINTER CARIB スプリンター カリブ												
1600	95.08-02.07	AE114G	**A1N034**	**MP-19**				**Drum**				
	96.05-02.07	AE111G (BZT)	**A1N034**	**MP-19**				**A2N095**	**A-464P**			
	96.05-02.07	AE111G	**A1N034**	**MP-15**				**Drum**				
1800	95.08-02.07	AE115G	**A1N034**	**MP-19**				**Drum**				
STARLET スターレット												
1300	89.12-98.01	EP82	**A1N043**	**MP-36**				**Drum**				
	89.12-98.01	EP82 (ABS)	**A1N034**	**MP-15**				**Drum**				
	89.12-98.01	EP82 (GT)	**A1N034**	**MP-15**				**A2N040**	**MP-23**			
	90.08-98.01	EP85	**A1N034**	**MP-15**				**Drum**				
	96.01-97.04	EP91 (RFL)	**A1N043**	**MP-36**				**Drum**				
	96.01-97.04	EP91 (RFL , WithABS)	**A1N034**	**MP-15**			A9N058	**Drum**				
	97.04-99.07	EP91 (RFL)	**A1N034**	**MP-7**				**Drum**				
	96.01-99.07	EP91(RFLF, RFLX, CARAT, REMIX)	**A1N034**	**MP-15**				**Drum**				
	96.01-99.07	EP91 (GLZV)	**A1N034**	**MP-15**				**A2N040**	**MP-23**			
	96.01-99.07	EP95	**A1N034**	**MP-15**				**Drum**				
1500	89.12-97.04	NP80, 90	**A1N043**	**MP-36**				**Drum**				
	89.12-97.04	NP80, 90 (ABS)	**A1N034**	**MP-15**				**Drum**				
	97.04-99.07	NP90	**A1N034**	**MP-7**				**Drum**				
SUPRA スープラ												
3000	93.05-02.08	JZA80 (17inch)	**A1N028**	**SP272**			A9N006	**A2N027**	**SP289**			A9N007
	93.05-02.08	JZA80	**A1N056**	**A-413P**				**A2N059**	**MP-43**			

※There are cases where it is SN130P depending on the shape of the SIM.

TOYOTA

cc	Year	Body Type	Front					Rear				
			Disc Pad	Seal Kit	Caliper		Piston	Disc Pad	Seal Kit	Caliper		Piston
					R	L				R	L	
SUCCEED VAN/WAGON サクシード バン/ワゴン												
1300	02.06-	NCP50V	**A1N067**	**SP432**	A5R015	A5L015		**Drum**				
1400	02.06-07.08	NLP51V	**A1N067**	**SP432**	A5R015	A5L015		**Drum**				
1500	02.06-	NCP51V, 52V, 55V	**A1N067**	**SP432**	A5R015	A5L015		**Drum**				
	02.06-04.11	NCP58G, 59G(14inch)	**A1N068**	**SP424**	A5R015	A5L015		**Drum**				
	04.11-10.06	NCP58G, 59G(14inch)	**SN130P**	**SP424**	A5R015	A5L015		**Drum**				
	10.06-	NCP58G, 59G(14inch)	**A1N068**	**SP424**	A5R015	A5L015		**Drum**				
	02.06-	NCP58G, 59G	**A1N067**	**SP432**	A5R015	A5L015		**Drum**				
	14.09-	NCP160V, 165V	**A1N155**	**SP434**								
	18.11-	NHP160V	**A1N155**									
TERCEL/CORSA ターセル/コルサ												
1300	90.09-99.07	EL41, 51Without ABS	**A1N034**	**MP-7**				**Drum**				
	90.09-99.07	EL41, 51 With ABS	**A1N034**	**MP-15**				**Drum**				
1500	90.09-99.07	NL40, 50, EL43, 45, 53 Without ABS	**A1N034**	**MP-45**				**Drum**				
	90.09-99.07	NL40, 50, EL43, 45, 53 With ABS	**A1N034**	**MP-15**				**Drum**				
	94.09-99.07	EL55	**A1N034**	**MP-15**				**Drum**				
T100												
2700	93.10-98.07	RCK10L		**SP431**			A9N026					
3000	92.08-94.08	VCK10L, 20L		**SP431**			A9N026					
3400	94.08-98.07	VCK11L, 21L		**SP431**			A9N026					
VANGUARD ヴァンガード												
2400	07.08-11.06	ACA33W, 38W	**A1N129**	**SP135**	A5R043	A5L043	A9N052	**A2N130**	**SP134**	A5R030	A5L030	
	11.06-12.12	ACA33W, 38W	**A1N129**	**SP135**	A5R043	A5L043	A9N052	**A2N130**	**SP422**			A9N085
	12.12-	ACA33W, 38W	**A1N129**	**SP135**	A5R043	A5L043	A9N052	**A2N130**	**SP422**			
3500	07.08-11.06	GSA33W	**A1N129**	**SP135**	A5R043	A5L043	A9N052	**A2N130**	**SP134**	A5R030	A5L030	
	11.06-	GSA33W	**A1N129**	**SP135**	A5R043	A5L043	A9N052	**A2N130**	**SP422**			
VEROSSA ヴェロッサ												
2000	01.06-04.04	GX110	**SN680**	**SP440**				**A2N099**	**SP441**			
	01.06-04.04	GX115	**A1N041**	**SP440**				**A2N099**	**SP441**			
2500	01.06-04.04	JZX110	**SN680**	**SP440**			A9N079	**A2N099**	**SP441**			
	01.06-04.04	JZX110 (Turbo)	**A1N056**	**MP-77**				**A2N099**	**SP441**			
VOLTZ ヴォルツ												
1800	02.05-04.02	ZZE136, 138	**A1N105**					**Drum**				
	02.05-04.02	ZZE137	**A1N105**					**A2N007**	**SP106**	A5R070	A5L070	A9N020
VISTA/VISTA ARDEO ビスタ/ビスタ アルディオ												
1800	90.07-94.06	SV30	**SN641**	**MP-50**				**Drum**				
	94.06-97.11	SV40	**A1N048**	**MP-50**			A9N051	**Drum**				
	97.11-98.06	SV40	**A1N048**	**MP-68**			A9N051	**Drum**				
	94.06-96.07	SV40	**A1N048**	**MP-50**			A9N051	**Drum**				
	96.07-97.11	SV40	**A1N048**	**MP-50**			A9N051	**Drum**				
	97.11-	SV40	**A1N048**	**MP-68**			A9N051	**Drum**				
	98.06-00.04	ZZV50, ZZV50G	**A1N048**	**SP427**			A9N051	**Drum**				
	00.04-03.07	ZZV50, ZZV50G	**A1N068**	**MP-104**	A5R016	A5L016	A9N056	**Drum**				
2000	90.07-94.06	CV30 (VR)	**SN641**	**MP-50**				**Drum**				
	90.07-94.06	CV30, SV32, 33(VE, VX, Etoile)	**SN641**	**MP-50**				**SN648P**	**SP467**			
	92.06-94.06	SV32, 33(VX turing Package)	**SN641**	**MP-50**				**SN648P**	**SP467**			
	90.07-94.06	SV32, 33 (GT)	**A1N046**	**MP-50**				**SN648P**	**SP467**			
	90.07-94.06	SV35	**SN641**	**MP-50**				**SN648P**	**SP467**			
	94.06-97.11	SV41, 42	**A1N048**	**MP-50**			A9N051	**A2N094**	**A-222P**			
	97.11-98.06	SV41, 42	**A1N048**	**MP-68**			A9N051	**A2N094**	**SP456**			

cc	Year	Body Type	Front					Rear				
			Disc Pad	Seal Kit	Caliper		Piston	Disc Pad	Seal Kit	Caliper		Piston
					R	L				R	L	
VISTA/VISTA ARDEO ビスタ/ビスタ アルディオ												
	94.06-97.11	SV43	**A1N048**	**MP-50**			A9N051	**A2N094**	**C-222P**			
	97.11-98.06	SV43	**A1N048**	**MP-68**			A9N051	**A2N094**	**C-222P**			
	98.06-03.07	SV50, 55, 50G, 55G, AZV50, 55, 50G, 55G	**A1N065**	**SP427**				**A2N066**	**SP466**			
2200	94.06-97.11	CV40	**A1N048**	**MP-50**			A9N051	**A2N094**	**A-222P**			
	97.11-98.06	CV40	**A1N048**	**MP-68**			A9N051	**A2N094**	**A-222P**			
	95.01-97.11	CV43	**A1N048**	**MP-50**			A9N051	**A2N094**	**C-222P**			
	97.11-98.06	CV43	**A1N048**	**MP-68**			A9N051	**A2N094**	**C-222P**			
VITZ ヴィッツ												
1000	99.01-05.01	SCP10	**A1N067**	**SP424**			A9N059	**Drum**				
	05.01-	KSP90	**A1N155**	**SP434**	A5R009	A5L009	A9N087	**Drum**				
	10.12-12.05	KSP130	**SN956P**	**SP435**				**Drum**				
	12.05-	KSP130	**A1N155**	**SP434**			A9N087					
1300	00.10-05.01	NCP10 (RS)	**A1N068**	**SP424**	A5R015	A5L015		**A2N007**	**SP222**			A9N021
	99.08-05.01	NCP10	**A1N067**	**SP424**			A9N059	**Drum**				
	99.08-05.01	NCP15, SCP13	**A1N067**	**SP424**				**Drum**		A5R067	A5L067	A9N021
	05.01-	SCP90, NCP95	**A1N155**	**SP434**	A5R009	A5L009		**Drum**				
	10.12-12.05	NSP130	**SN956P**	**SP435**				**Drum**				
	12.05-	NSP130	**A1N155**	**SP434**			A9N087					
	10.12-	NSP135	**A1N155**	**SP434**	A5R009	A5L009	A9N087	**Drum**				
1500	00.10-05.01	NCP13	**A1N068**	**SP424**	A5R015	A5L015		**A2N007**	**SP222**	A5R067	A5L067	A9N021
	05.01-	NCP91 (RS)	**SN939**	**SP455**			A9N088	**SN938P**	**※1, 2**			
	05.01-	NCP91	**A1N155**	**SP434**	A5R009	A5L009	A9N087	**Drum**				
	10.12-	NCP131 (RS)	**SN939**	**SP455**			A9N088	**SN938P**	**TP-112**			
	10.12-	NCP131	**A1N155**	**SP434**			A9N087	**SN938P**	**TP-112**			
WISH ウィッシュ												
1800	03.01-09.03	ZNE10G (Rear Drum)	**A1N073**	**SP443**			A9N078	**Drum**				
	03.01-09.03	ZNE10G (Rear Disc) , ZNE14G	**A1N073**	**SP443**			A9N078	**A2N104**	**MP-100**			
	09.04-	ZGE20G, 20W (Rear Drum)	**A1N128**	**SP135**			A9N052	**Drum**				
	09.04-	ZGE20G, 20W (Rear Disc)	**A1N128**	**SP135**			A9N052	**A2N104**	**SP420**			
	09.04-09.07	ZGE25G, 25W	**A1N128**	**SP135**			A9N052	**A2N104**	**MP-100**			
	09.07-10.12	ZGE25G, 25W	**A1N128**	**SP135**			A9N052	**A2N104**	**SP419**			
	10.12-	ZGE25G, 25W	**A1N128**	**SP135**			A9N052	**A2N104**	**SP420**			
2000	03.04-09.03	ANE10G, 11W	**A1N073**	**SP443**			A9N078	**A2N104**	**MP-100**			
	09.04-09.07	ZGE21G, 22W	**A1N128**	**SP135**				**A2N104**	**MP-100**			
	09.07-10.12	ZGE21G, 22W	**A1N128**	**SP135**				**A2N104**	**SP419**			
1800	10.12-	ZGE21G, 22W	**A1N128**	**SP135**				**A2N104**	**SP420**			
WILL CYPHA WILL サイファ												
1300	02.09-05.07	NCP70	**A1N068**	**SP424**	A5R015	A5L015		**Drum**				
1500	02.09-05.07	NCP75	**A1N068**	**SP424**	A5R015	A5L015		**Drum**				
WILL VI												
1300	00.01-01.12	NCP19	**A1N068**	**SP424**	A5R015	A5L015		**Drum**				
WILL VS												
1500	02.01-04.04	NZE127	**A1N068**	**SP409**	A5R016	A5L016		**Drum**				
1800	01.04-04.04	ZZE127	**A1N068**	**SP409**	A5R016	A5L016		**A2N007**	**SP294**	A5R016	A5L016	A9N019
	01.04-04.04	ZZE128	**A1N065**	**SP427**				**A2N007**	**SP106**			A9N020
	01.04-04.04	ZZE129	**A1N068**	**SP409**	A5R016	A5L016		**Drum**				
WINDOM ウインダム												
2500	93.08-96.08	VCV11	**A1N041**	**MP-50**				**SN648P**	**SP467**			
	93.08-96.08	VCV11(ABS)	**A1N041**	**C-322P**				**SN648P**	**SP467**			

※1 '05.01～'05.08:TP-97/ '05.08～'06.01:TP-99A/ '06.01～'06.08:TP-97
※2 '06.08～'06.12:TP-97A/ '06.12～'07.08:TP-111/ '07.08～'08.09:TP-112/
'08.09～ TP-111

TOYOTA

cc	Year	Body Type	Front					Rear				
			Disc Pad	Seal Kit	Caliper		Piston	Disc Pad	Seal Kit	Caliper		Piston
					R	L				R	L	
WINDOM ウインダム												
	96.08-99.08	MCV21	**A1N097**	**A-678P**				**SN648P**	**MP-78**			
	98.08-01.07	MCV21	**A1N097**	**A-678P**				**A2N066**	**SP463**			
3000	91.10-96.08	VCV10	**A1N041**	**MP-50**			A9N092	**SN648P**	**SP467**			
	93.08-96.08	VCV10(ABS)	**A1N041**	**C-322P**			A9N094	**SN648P**	**SP467**			
	96.08-99.08	MCV20	**A1N097**	**A-678P**				**SN648P**	**MP-78**			
	99.08-01.07	MCV20	**A1N097**	**A-678P**				**A2N066**	**SP463**			A9N062
	01.07-06.03	MCV30	**A1N106**	**MP-107**	A5R108	A5L108	A9N093	**A2N104**	**MP-100**			A9M062
YARIS ヤリス												
1500	12.04-13.02	NHP130	**A1N128**	**SP442**	A5R105	A5L105	A9N055					
CT200h												
1800	10.12-	ZWA10	**A1N192**	**SP437**	A5R091	A5L091	A9N089	**A2N196**	**TP-111**			
GS250/ 300/ 350/ 430/ 460												
2500	12.01-	GRL11	**A1N166**	**SP112**				**★A2N226**	**SP461**			
	13.09-	AWL10 (F-SPORTパッケージ)	**A1N166**	**SP112**				**★A2N226**	**SP461**			
	13.10-	AWL10	**A1N166**	**SP112**				**★A2N226**	**SP461**			
3500	05.07-05.11	GRS191, 196	**A1N166**	**SP112**	A5R079	A5L079	A9N010	**A2N118**				A9N081
	05.11-	GRS191, 196	**A1N166**	**SP112**	A5R079	A5L079	A9N010	**A2N118**	**SP412**			A9N081
	12.01-	GRL10, 15, GWL10	**A1N166**	**SP112**	A5R079	A5L079	A9N010	**★A2N226**	**SP461**			A9N083
	12.01-	GRL10, 15, GWL10 (F-SPORT)		**SP112**	A5R079	A5L079	A9N010					A9N083
4300	05.07-07.09	UZS190	**A1N166**	**SP112**	A5R079	A5L079	A9N010	**A2N118**				A9N082
4600	07.09-	URS190	**A1N166**	**SP112**	A5R079	A5L079	A9N010	**A2N118**	**SP412**			A9N082
3500	15.10-	GRL12(2WD)	**A1N166**	**SP112**				**★A2N226**	**SP461**			
	15.10-	GRL16(AWD)	**A1N166**	**SP112**				**★A2N226**	**SP461**			
GS450h												
3500	06.02-	GWS191	**A1N166**	**SP112**	A5R079	A5L079	A9N010	**A2N118**	**SP412**			A9N082
GX400/ 460												
4000	09.11-15.05	GRJ158		**SP004**	A5R086	A5L086	A9N042		**SP259**	A5R045	A5L045	A9N053
	15.05-	GRJ158		**SP004**	A5R103	A5L103	A9N042		**SP259**	A5R045	A5L045	A9N053
4600	09.11-15.05	URJ150		**SP004**	A5R086	A5L086	A9N042		**SP259**	A5R045	A5L045	A9N053
	15.05-	URJ150		**SP004**	A5R103	A5L103	A9N042		**SP259**	A5R045	A5L045	A9N053
HS250h												
2400	09.07-11.07	ANF10	**A1N128**	**SP135**			A9N052	**A2N130**	**SP134**			A9N085
	11.07-	ANF10	**A1N128**	**SP135**			A9N052	**A2N130**	**SP422**			A9N085
IS250/ 300/ 350/ IS F												
2500	05.08-05.11	GSE20	**SN192**	**MP121**				**A2N118**	**SP417**			
	05.11-08.08	GSE20	**SN192**	**MP121**				**A2N118**	**MP-113**			
	08.08-13.04	GSE20	**SN192**	**SP440**				**A2N118**	**MP-113**			
	05.08-05.11	GSE25	**SN192**	**MP121**				**A2N118**	**SP417**			
	05.11-08.08	GSE25	**SN192**	**MP121**				**A2N118**	**MP-113**			
	08.08-11.04	GSE25	**SN192**	**SP440**				**A2N118**	**MP-113**			
	11.04-11.08	GSE25	**SN192**	**SP440**				**A2N118**	**SP415**			
	11.08-13.04	GSE25	**SN192**	**SP445**				**A2N118**	**SP415**			
	13.04-15.08	GSE30	**A1N140**	**SP445**				**SN189**	**SP461**			
	13.04-15.08	GSE30(F-SPORT, version L)	**SN192**	**SP440**				**SN189**	**SP461**			
	13.04-16.10	GSE35	**A1N140**	**SP445**				**SN189**	**SP461**			
	13.04-	AVE30, AWE35										
3500	05.05-05.11	GSE21	**A1N166**	**SP112**	A5R079	A5L079	A9N010	**A2N118**				A9N082
	05.11-	GSE21	**A1N166**	**SP112**	A5R079	A5L079	A9N010	**A2N118**	**SP412**			A9N082
	05.11-	GSE31	**A1N166**	**SP112**				**★A2N226**	**SP461**			A9N083

★発売予定

cc	Year	Body Type	Front					Rear				
			Disc Pad	Seal Kit	Caliper		Piston	Disc Pad	Seal Kit	Caliper		Piston
					R	L				R	L	
IS250/300/350/IS F												
	05.11-	GSE31 (F-SPORT)		**SP112**								
	15.08-	GSE35(4WD)	**A1N140**	**SP445**				**★A2N226**	**SP461**			
5000	07.12-	USE20										
IS250 AWD												
2500	10.08-	GSE25						**A2N118**				
IS250C												
2500	09.05-	GSE20		**SP440**	A5R027	A5L027		**A2N118**	**SP415**			
	13.08-14.08	GSE20	**SN192**	**SP440**				**★A2N226**	**SP462**			
3500	09.05-13.08	GSE21	**A1N166**					**A2N118**	**SP415**			
	13.08-14.08	GSE21						**★A2N226**	**SP462**			
LS460												
4600	06.08-	USF40 (19inch)		**SP400**			A9N012		**SP402**			A9N013
	06.08-	USF40		**SP400**			A9N012		**SP402**			A9N013
	08.09-	USF41, 45, 46		**SP400**			A9N012		**SP402**			A9N013
LS600h/600hL												
5000	07.04-	UVF45(Active Stabilizer sus)		**SP400**			A9N012		**SP402**			A9N013
	07.04-	UVF45, 46		**SP400**			A9N012		**SP402**			A9N013
LX450												
4500	95.11-98.01	FZJ80	**A1N023**	**SP265**	A5R100	A5L100	A9N015	**A2N012**	**SP259**	A5R046	A5L046	A9N053
LX450D/460/570												
4500	15.09-	VDJ201	**A1N156**	**SP139**	A5R101	A5L101	A9N039		**SP457**			
5700	15.09-	URJ201	**A1N156**	**SP139**	A5R101	A5L101	A9N039		**SP457**			
NX200t												
2000	14.07-	AGZ10, 15										
NX300h												
2500	14.07-	AYZ10, 15										
RC300												
2500	14.09-15.10	AVC10	**A1N166**	**SP112**					**SP461**			A9N083
RC350												
3500	14.09-15.10	GSC10	**A1N166**	**SP112**					**SP461**			A9N083
RX200												
2000	15.09-	AGL20W, AGL25W	**A1N191**									
RX270/350/450h												
3500	09.01-	GGL10W, 15W, 16W, GYL10W, 15W, 16W, AGL10W	**A1N191**					**A2N194**				
RX300												
3000	98.01-	MCU1#										A9N063
SC430												
4300	05.08-	UZZ40	**A1N056**	**MP-77**			A9N079	**A2N099**	**MP-80**			
UX200												
2000	18.01-	MZAA10										
UX250h												
2000	18.11-	MZAH10, MZAH15										

★発売予定

SPECIFIC INDEX FOR NISSAN

CAR NAME	PAGE
AD/ AD EXPERT AD/ ADエキスパート	41
AD VAN/ WAGON ADバン/ ワゴン	41
ATLAS(F23・F24) アトラス(F23・F24)	41
ATLAS/ CONDOR (H41) アトラス/ コンドル (H41)	42
ATLAS/ CONDOR (H42) アトラス/ コンドル (H42)	42
ATLAS/ CONDOR (H44) アトラス/ コンドル (H44)	43
AVENIR/ AVENIR SALUT アベニール/ アベニール サリュー	43
BASSARA バサラ	43
BLUEBIRD ブルーバード	43
BLUEBIRD SYLPHY ブルーバード シルフィ	44
CARAVAN HOMY キャラバン ホーミー	44
CARAVAN/ SILKROAD/ COACH キャラバン/ シルクロード/ コーチ	44
CEDRIC/ GLORIA セドリック/ グロリア	45
CEDRIC/ GLORIA (Wagon・Van)セドリック/ グロリア (ワゴン・バン)	45
CEDRIC/ GLORIA (Taxi) セドリック/ グロリア (タクシー)	45
CEFIRO セフィーロ	46
CEFIRO WAGON セフィーロ ワゴン	46
CIMA シーマ	46
CIVILIAN シビリアン	46
CLIPPER/ CLIPPER RIO クリッパー/ クリッパーリオ	46
CREW クルー	46
CREW(Taxi) クルー(タクシー)	46
CUBE/ CUBE CUBIC キューブ/ キューブ キュービック	46
DATSUN TRUCK ダットサン トラック	47
DAYZ デイズ	47
DAYZ ROOX デイズルークス	47
DUALIS デュアリス	47
ELGRAND エルグランド	47
EXPERT エキスパート	47
FAIRLADY Z フェアレディ Z	48
FUGA フーガ	48
GT-R	48
HYPER MINI ハイパー ミニ	48
INFINITI インフィニティ	48
JUKE ジューク	48
KIX キックス	48
LAFESTA ラフェスタ	48
RAFESTA HIGHWAY STAR ラフェスタ ハイウェイスター	48
LARGO ラルゴ	49
LAUREL ローレル	49
LEAF リーフ	49
LEOPARD/ LEOPARD J-FERIE レパード/ レパード Jフェリー	49

CAR NAME	PAGE
MARCH マーチ	49
C+C MICRA C+C マイクラ	49
MISTRAL ミストラル	50
MURANO ムラーノ	50
MOCO モコ	50
NOTE ノート	50
NV100CLIPPER NV100クリッパー	50
NV200 VANETTE/ Van NV200バネット/ バン	50
NV350 CARAVAN(Van・Truck) NV350キャラバン(バン・トラック)	50
OTTI オッティ	50
Patrol パトロール	50
PINO ピノ	50
PRAIRIE/ PRAIRIE LIBERTY プレーリー/ プレーリー リバティ	50
PRESAGE プレサージュ	51
PRESIDENT プレジデント	51
PRESEA プレセア	51
PRIMERA/ PRIMERA CAMINO プリメーラ/ プリメーラ カミノ	51
PRIMERA WAGON プリメーラ ワゴン	51
PULSAR/ PULSAR SERIE/ LUCINO パルサー/ パルサー セリエ/ ルキノ	52
RASHEEN ラシーン	52
R' NESSA ルネッサ	52
R' NESSA EV ルネッサ EV	52
ROOX ルークス	52
SAFARI/ PATOROL サファリ/ パトロール	52
SERENA セレナ	53
SKYLINE スカイライン	53
SKYLINE CROSSOVER スカイライン クロスオーバー	54
SILVIA シルビア	54
STAGEA ステージア	54
SUNNY サニー	55
SUNNY Truck サニー トラック	55
SYLPHY シルフィ	55
TEANA ティアナ	55
TERRANO/ TERRANO REGULUS テラノ/ テラノ レグラス	55
TIIDA/ TIIDA LATIO ティーダ/ ティーダ ラティオ	56
TINO ティーノ	56
VANETTE (Van・Truck) バネット (バン・トラック)	56
VANETTE SERENA バネット セレナ	56
WINGROAD ウィングロード	56
X-TRAIL エクストレイル	57
180SX	57

cc	Year	Body Type	Front					Rear				
			Disc Pad	Seal Kit	Caliper		Piston	Disc Pad	Seal Kit	Caliper		Piston
					R	L				R	L	
AD/AD EXPERT AD/ADエキスパート												
1200	06.12-08.12	VAY12	**B1N234**	**C-675P**				**Drum**				
	08.12-	VAY12	**B1N234**	**C-675P**				**Drum**				
1500	07.01-08.12	VY12	**B1N234**	**C-675P**				**Drum**				
	08.12-	VY12	**B1N234**	**C-675P**				**Drum**				
1600	08.12-	VZNY12	**B1N234**	**C-675P**				**Drum**				
1800	07.01-08.12	VJY12	**B1N234**	**C-675P**				**Drum**				
	08.12-	VJY12	**B1N234**	**C-675P**				**Drum**				
AD VAN/WAGON ADバン/ワゴン												
1300	90.10-97.05	VY10	**SN585P**	**TP-13**				**Drum**				
	97.05-99.06	VY10	**SN798P**	**C-213AP**				**Drum**				
	90.10-95.06	WY10	**SN585P**	**TP-13**				**Drum**				
	93.07-99.06	MVY10 (MEXICO)	**SN585P**	**TP-13**				**Drum**				
	99.06-07.01	VY11	**B1N037**	**TP-81**				**Drum**				
1500	90.10-97.05	VFY10, VFGY10	**SN585P**	**TP-13**				**Drum**				
	97.05-99.06	VFY10, VFGY10	**SN798P**	**C-213AP**				**Drum**				
	94.08-99.06	VFY10, VFGY10 (ABS)	**SN798P**	**C-213AP**				**Drum**				
	90.10-99.06	VFNY10	**SN798P**	**C-213AP**				**Drum**				
	90.10-96.05	WFY10, WFGY10	**SN585P**	**TP-13**				**Drum**				
	90.10-96.05	WFY10, WFGY10 (ABS)	**SN798P**	**C-213AP**				**Drum**				
	90.10-96.05	WFNY10	**SN798P**	**C-213AP**				**Drum**				
	93.07-99.06	MVFY10 (MEXICO)	**SN585P**	**TP-13**				**Drum**				
	99.06-08.12	VFY11	**B1N037**	**TP-81**				**Drum**				
1700	90.10-97.05	VSY10, VSGY10	**SN585P**	**TP-13**				**Drum**				
	97.05-99.06	VSY10, VSGY10	**SN798P**	**C-213AP**				**Drum**				
	94.08-99.06	VSY10, VSGY10 (ABS)	**SN798P**	**C-213AP**				**Drum**				
	90.10-99.06	VSNY10	**SN798P**	**C-213AP**				**Drum**				
	90.10-93.08	WSY10	**SN585P**	**TP-13**				**Drum**				
	90.10-93.08	WSY10 (ABS)	**SN798P**	**C-213AP**				**Drum**				
1800	99.06-08.12	VHNY11	**B1N037**	**TP-81**				**Drum**				
	00.01-08.12	VGY11	**B1N037**	**TP-81**				**Drum**				
2000	93.08-96.05	WEY10	**SN585P**	**TP-13**				**Drum**				
	93.08-96.05	WEY10 (ABS)	**SN798P**	**C-213AP**				**Drum**				
2200	99.06-03.10	VEY11, VENY11	**B1N037**	**TP-81**				**Drum**				
ATLAS(F23・F24) アトラス(F23・F24)												
2000	92.01-97.08	SK2F23, 4F23 (W-tire 1.5t)	**SN574**	**TP-15**				**Drum**				
	97.08-99.06	SK2F23, 4F23 (W-tire 1.5t)	**B1N031**	**TP-15**				**Drum**				
	95.06-97.08	SK2F23 (Single-tire 1.0t)	**B1N003**	**SP220**				**Drum**				
	97.08-99.06	SK2F23 (S-tire 1.0t)	**B1N004**	**SP220**				**Drum**				
	95.06-97.08	SK2F23 (1.25t)	**B1N010**	**TP-78**				**Drum**				
	97.08-99.06	SK2F23 (1.25t)	**B1N011**	**TP-78**				**Drum**				
	99.06-02.08	SH2F23 (1.3t) (Single-tire, SW-tire)	**B1N011**	**TP-78**				**Drum**				
	02.08-07.06	SH2F23 (Single-tire 3t SW-tire 1.0t, 1.3t)	**B1N011**	**TP-66**				**Drum**				
	99.06-07.06	SH2F23 (1.25t, 1.5t)	**B1N031**	**TP-15**				**Drum**				
	99.06-07.06	SH4F23	**B1N031**	**TP-15**				**Drum**				
	07.06-	SQ1F24, SQ2F24	**B1N235**	**A-665P**				**Drum**				
2300	92.01-95.06	SM2F23, 4F23	**B1N003**	**SP220**				**Drum**				
	92.01-95.06	SM6F23	**B1N010**	**TP-78**				**Drum**				
2500	97.08-99.06	SN2F23, 4F23, 6F23, 1.25tØSTD, Achassis, W-cab)	**B1N011**	**TP-78**				**Drum**				

NISSAN

NISSAN

cc	Year	Body Type	Front					Rear				
			Disc Pad	Seal Kit	Caliper		Piston	Disc Pad	Seal Kit	Caliper		Piston
					R	L				R	L	
ATLAS(F23・F24) アトラス(F23・F24)												
	97.08-99.06	SN2F23 (1.0t)	**B1N004**	**SP220**				**Drum**				
	97.08-99.06	SN4F23 (1.5t)	**B1N031**	**TP-15**				**Drum**				
2700	95.06-97.08	SP2F23, 4F23, 8F23	**SN574**	**TP-15**				**Drum**				
	92.01.95.06	SP2F23, 4F23 (WT A/ T)	**B1N003**	**SP220**				**Drum**				
	92.01-95.06	SP2F23, 4F23(ST)	**B1N011**	**TP-78**				**Drum**				
	95.06-97.08	SP2F23, 4F23	**SN574**	**TP-15**				**Drum**				
	99.06-02.08	SP2F23, 4F23, 6F23	**B1N011**	**TP-78**				**Drum**				
	02.08-04.08	SP2F23, 4F23, 6F23	**B1N011**	**TP-66**				**Drum**				
	92.01-97.08	SP8F23	**SN574**	**TP-15**				**Drum**				
3000	07.06-	SZ1F24, SZ2F24, SZ4F24, SZ5F24	**B1N235**	**A-665P**				**Drum**				
	07.06-	TZ2F24, TZ3F24 , (Freezer)	**SN957P**	**TP-109**				**Drum**				
3200	97.08-07.06	SR2F23, 4F23, 8F23	**B1N031**	**TP-15**				**Drum**				
ATLAS/ CONDOR (H41) アトラス/ コンドル (H41)												
3000	91.10-95.05	SW2H41, 2S41, DW2H41, DW2S41, LW4YH41, 4YS41(Front Drum)						**Drum**				
	91.10-95.05	SW2H41, 2S41, DW2H41, DW2S41, LW4YH41, 4YS41(Front Disc)	**SN813P**	**A-381P**				**Drum**				
3500	91.10-95.05	SE2H41, 2S41, TE2H41, 2S41(Front Drum)						**Drum**				
	91.10-95.05	SE2H41, 2S41, TE2H41, 2S41(Front Disc)	**SN813P**	**A-381P**				**Drum**				
4200	91.10-95.05	SG2H41, 2S41, DG2H41, 2S41, LG2YH41, 2YS41, LG4YH41, LG4YS41, UG4YH41, 4YS41, VG2YH41, 2YS41(Front Drum)						**Drum**				
	91.10-95.05	SG2H41, 2S41, DG2H41, 2S41, LG2YH41, 2YS41, LG4YH41, LG4YS41, UG4YH41, 4YS41, VG2YH41, 2YS41(Front Disc)	**SN813P**	**A-381P**				**Drum**				
	91.10-95.05	LG7YH41, 8YH41, DG7YH41(Front Drum)						**Drum**				
	91.10-95.05	LG7YH41, 8YH41, DG7YH41(Front Disc)	**SN813P**	**A-381P**				**Drum**				
4600	91.10-95.05	UH4YH41, 4YS41, 5YH41, UH5YS41, RH4YH41, 4YS41(Front Drum)						**Drum**				
	91.10-95.05	UH4YH41, 4YS41, 5YH41, UH5YS41, RH4YH41, 4YS41(Front Disc)	**SN813P**	**A-381P**				**Drum**				
ATLAS/ CONDOR (H42) アトラス/ コンドル (H42)												
3100	95.05-	AKR69E, BKR69E(Front Disc Independent sus)	**SN836P**	**A-429P**				**Drum**				
	95.05-	AKR69E, BKR69E(Front Disc)	**SN858P**	**A-522P**				**Drum**				
	95.05-	AKR69L, BKR69L (Front Disc)	**SN836P**	**A-429P**				**Drum**				
4300	95.05-	APR66G, 66L, 66P, BPR66G, 66L, 66P(Front Drum)						**Drum**				
	95.05-	APR66G, 66L, 66P, BPR66G, 66L, 66P(Front Disc)	**SN858P**	**A-522P**				**Drum**				
	95.05-	AKR66E, 66G, 66L, BKR66E, 66L, 66G(Front Drum)						**Drum**				
	95.05-	AKR66E, 66L, BKR66E, 66L(Front Disc Independent sus)	**SN836P**	**A-429P**				**Drum**				
	95.05-	AKR66E, 66L, BKR66E, 66L(Front Disc)	**SN858P**	**A-522P**				**Drum**				
4600	95.05-	APR71G, 71L, 71P, BPR71G, 71L, 71P(Front Drum)						**Drum**				
	95.05-	APR71G, 71L, 71P, BPR71G, 71L, 71P(Front Disc)	**SN858P**	**A-522P**				**Drum**				
	95.05-	AKR71G, BKR71G(Front Drum)						**Drum**				
	95.05-	AKR71E, BKR71E(Front Drum)						**Drum**				
	95.05-	AKR71E, BKR71E(Front Disc Independent sus)	**SN836P**	**A-429P**				**Drum**				

cc	Year	Body Type	Front					Rear				
			Disc Pad	Seal Kit	Caliper		Piston	Disc Pad	Seal Kit	Caliper		Piston
					R	L				R	L	
ATLAS/ CONDOR (H42) アトラス/ コンドル (H42)												
	95.05-	AKR71E, BKR71E(Front Disc)	**SN858P**	**A-522P**				**Drum**				
4800	95.05-	APT70G, BPT70G, APR70L, 70LY, 70P, 70PY, BPR70L, 70LY, 70P, 70PY(Front Drum)						**Drum**				
	95.05-	APT70G, BPT70G, APR70L, 70LY, 70P, 70PY, BPR70L, 70LY, 70P, 70PY(Front Disc)	**SN858P**	**A-522P**				**Drum**				
ATLAS/ CONDOR (H44) アトラス/ コンドル (H44)												
3000	20.13.01-	FBA2W, FDA2W, FEA2W, FEB2W, FGA2W	**SN200P**	**MP131**				**SN201P**	**MP132**			
	20.13.01-	FBA3W, FBA5W, FBA6W, FEA5W, FEA5X, FEB5W	**SN193P**	**MP127**				**SN193P**	**MP127**			
	20.13.01-	FBA3W, FBA5W, FBA6W	**SN193P**	**MP127**				**SN193P**	**MP127**			
	20.13.01-	FEB7X, FEB8W, FEB9W	**SN193P**	**SP459**				**SN193P**	**SP459**			
AVENIR/ AVENIR SALUT アベニール/ アベニール サリュー												
1600	90.05-93.12	VEW10, VENW10	**※1**	**A-240P**				**Drum**				
	93.12-99.06	VEW10, VENW10	**SN853P**	**A-240P**				**Drum**				
	93.01-99.06	VEW10, VENW10 (ABS)	**B1N020**	**TP-82**				**B2N022**	**TP-21A**			
1800	90.05-93.12	W10	**※1**	**A-240P**				**Drum**				
	93.12-95.08	W10	**SN853P**	**A-240P**				**Drum**				
	95.08-97.01	W10	**B1N020**	**TP-82**				**Drum**				
	93.01-97.01	W10 (ABS)	**B1N020**	**TP-82**				**B2N022**	**TP-21A**			
	97.01-98.08	W10	**B1N020**	**TP-82**				**B2N022**	**TP-21A**			
	98.08-05.09	W11	**B1N019**	**TP-82**				**Drum**				
2000	90.05-93.12	VSW10	**※1**	**A-240P**				**Drum**				
	93.12-99.06	VSW10	**SN853P**	**A-240P**				**Drum**				
	93.01-99.06	VSW10 (ABS)	**B1N020**	**TP-82**				**B2N022**	**TP-21A**			
	90.05-98.08	PW10	**B1N020**	**TP-82**				**B2N022**	**TP-21A**			
	93.01-98.08	SW10	**B1N020**	**TP-82**				**B2N022**	**TP-21A**			
	90.10-98.08	PNW10	**B1N020**	**TP-82**				**B2N022**	**TP-21A**			
	95.08-98.08	PNW10 (Turbo)	**B1N023**	**TP-60**				**B2N022**	**TP-21A**			
	98.08-00.05	SW11	**B1N019**	**TP-82**				**Drum**				
	98.08-01.01	PW11	**B1N019**	**TP-82**				**B2N022**	**TP-43**			
	01.01-02.08	PW11	**B1N019**	**TP-82**				**B2N040**	**TP-43**			
	98.08-01.01	PNW11	**B1N019**	**TP-82**				**B2N022**	**TP-43**			
	01.01-02.08	PNW11	**B1N019**	**TP-82**				**B2N040**	**TP-43**			
	98.08-01.01	PNW11 (Turbo)	**B1N028**	**TP-78**				**B2N022**	**TP-43**			
	01.01-02.08	PNW11 (Turbo)	**B1N028**	**TP-78**				**B2N040**	**TP-43**			
	02.08-05.09	RW11, RNW11	**B1N019**	**TP-82**				**B2N040**	**TP-43**			
BASSARA バサラ												
2400	99.11-01.08	JU30, JNU30	**B1N062**	**A-450P**				**Drum**				
2500	99.11-01.08	JVU30, JVNU30	**B1N062**	**A-450P**				**Drum**				
	01.08-03.06	JTU30, JTNU30	**B1N062**	**A-450P**				**Drum**				
3000	99.11-03.06	JHU30	**B1N062**	**A-450P**				**Drum**				
BLUEBIRD ブルーバード												
1800	96.01-98.09	EU14 (Rear Drum)	**B1N020**	**TP-82**				**Drum**				
	96.01-98.09	EU14 (Rear Disc)	**B1N020**	**TP-82**				**B2N022**	**TP-43**			
	96.01-00.11	ENU14	**B1N020**	**TP-82**				**B2N022**	**TP-43**			
	00.11-01.08	ENU14	**B1N020**	**TP-82**				**B2N040**	**TP-43**			
	98.09-01.08	QU14 (Rear Drum)	**B1N020**	**TP-82**				**Drum**				
	00.11-01.08	QU14 (Rear Disc)	**B1N020**	**TP-82**				**B2N040**	**TP-43**			
2000	96.01-01.08	HU14 (LEGRANT)	**B1N020**	**TP-82**				**Drum**				
	96.01-00.11	HU14	**B1N020**	**TP-82**				**B2N022**	**TP-43**			

※1 SN853P-with Shim for retaining pin. SN783P-w/ o Shim for retaining pin.

NISSAN

cc	Year	Body Type	Front					Rear				
			Disc Pad	Seal Kit	Caliper		Piston	Disc Pad	Seal Kit	Caliper		Piston
					R	L				R	L	
BLUEBIRD ブルーバード												
	00.11-01.08	HU14	**B1N020**	**TP-82**				**B2N040**	**TP-43**			
	97.09-00.11	HU14 (SSS-Z)	**B1N019**	**TP-82**				**B2N022**	**TP-43**			
	00.11-01.08	HU14 (SSS-Z)	**B1N019**	**TP-82**				**B2N040**	**TP-43**			
	96.01-00.11	HNU14	**B1N020**	**TP-82**				**B2N022**	**TP-43**			
	00.11-01.08	HNU14	**B1N020**	**TP-82**				**B2N040**	**TP-43**			
	96.01-01.08	SU14 (Rear Drum)	**B1N020**	**TP-82**				**Drum**				
	96.01-00.11	SU14 (Rear Disc)	**B1N020**	**TP-82**				**B2N022**	**TP-43**			
	00.11-01.08	SU14 (Rear Disc)	**B1N020**	**TP-82**				**B2N040**	**TP-43**			
	96.01-00.11	SU14 (Training Vehicle)	**B1N020**	**TP-82**				**B2N022**	**TP-43**			
	00.11-01.08	SU14 (Training Vehicle)	**B1N020**	**TP-82**				**B2N040**	**TP-43**			
BLUEBIRD SYLPHY ブルーバード シルフィ												
1500	00.08-05.12	FG10	**B1N037**	**TP-81**				**Drum**				
	05.12-08.09	G11, NG11	**B1N234**	**C-675P**				**Drum**				
	08.09-09.05	G11, NG11	**B1N234**	**C-675P**				**Drum**				
	09.05-	G11, NG11	**B1N234**	**C-675P**				**Drum**				
1800	00.08-05.12	QG10, QNG10	**B1N037**	**TP-81**				**Drum**				
2000	00.08-05.12	TG10	**B1N037**	**TP-81**				**Drum**				
	05.12-08.09	KG11	**B1N234**	**C-675P**				**Drum**				
	08.09-09.05	KG11	**B1N234**	**C-675P**				**Drum**				
	09.05-	KG11	**B1N234**	**C-675P**				**Drum**				
CARAVAN HOMY キャラバン ホーミー												
2000	86.09-95.08	KHE24, KHGE24	**B1N011**	**TP-78**				**Drum**				
	90.08-92.10	VTE24, VTGE24, CTGE24 DTGE24, FTGE24	**B1N003**	**SP220**				**Drum**				
	92.10-99.06	VTE24, VTGE24, CTGE24 DTGE24, FTGE24	**B1N010**	**TP-78**				**Drum**				
	99.06-01.04	VPE24, CPGE24, VPGE24	**B1N062**	**A-450P**				**Drum**				
2400	99.06-01.04	CQGE24	**B1N062**	**A-450P**				**Drum**				
	87.10-92.10	DRGE24	**B1N003**	**SP220**				**Drum**				
	92.10-97.05	DRGE24	**B1N011**	**TP-78**				**Drum**				
2700	87.10-99.06	KRME24, ARME24, ARMGE24	**B1N011**	**TP-78**				**Drum**				
	88.10-99.06	KRE24, ARE24, KRGE24, ARGE24	**B1N011**	**TP-78**				**Drum**				
	90.08-92.10	VRE24, VRGE24, CRGE24, VRMGE24	**B1N003**	**SP220**				**Drum**				
	92.10-97.05	VRE24, VRGE24, CRGE24, VRMGE24	**B1N010**	**TP-78**				**Drum**				
	90.10-96.09	CRMGE24	**B1N010**	**TP-78**				**Drum**				
3000	88.10-99.06	AEGE24, KEE24, FEGE24	**B1N011**	**TP-78**				**Drum**				
	99.11-01.04	AEGE24, KEE24, FEGE24	**B1N011**	**TP-66**				**Drum**				
3200	96.08-99.06	VWE24, VWGE24, CWGE24, VWMGE24, CWMGE24	**B1N010**	**TP-78**				**Drum**				
	99.06-01.04	VWE24, VWGE24, CWGE24, VWMGE24, CWMGE24	**B1N062**	**A-450P**				**Drum**				
	97.05-99.11	DWGE24	**B1N011**	**TP-78**				**Drum**				
	99.11-01.04	DWGE24	**B1N011**	**TP-66**				**Drum**				
CARAVAN/ SILKROAD/ COACH キャラバン/ シルクロード/ コーチ												
2000	01.04-07.09	VPE25	**B1N235**	**A-665P**				**Drum**				
	07.09-	VRE25	**B1N235**	**A-665P**				**Drum**				
2400	01.04-07.09	QE25, QGE25, CQGE25, DQGE25	**B1N235**	**A-665P**				**Drum**				
2500	07.09-	CSGE25, DSGE25, SGE25	**B1N235**	**A-665P**				**Drum**				
	07.09-08.12	SE25	**B1N235**	**A-665P**				**Drum**				
3000	01.04-	VWE25, VWME25, CWMGE25, CWGE25, DWMGE25, DWGE25	**B1N235**	**A-665P**				**Drum**				

cc	Year	Body Type	Front					Rear				
			Disc Pad	Seal Kit	Caliper		Piston	Disc Pad	Seal Kit	Caliper		Piston
					R	L				R	L	
CEDRIC/ GLORIA セドリック/ グロリア												
2000	87.06-02.08	MJY31, CMJY31, TY31	**B1N004**	**SP220**				**Drum**				
	87.06-02.08	Y31, CY31	**B1N004**	**SP220**				**B2N045**	**C-149P**			
	87.06-02.08	Y31, CY31 (ABS)	**B1N011**	**TP-66**				**B2N045**	**C-149P**			
	87.06-99.08	QJY31, NJY31, TNJY31	**B1N011**	**TP-66**				**Drum**				
	91.06-95.08	YY31	**B1N004**	**SP220**				**B2N045**	**C-149P**			
	91.06-95.08	YY31 (ABS)	**B1N011**	**TP-66**				**B2N045**	**C-149P**			
	91.06-95.06	Y32	**B1N004**	**SP220**				**B2N056**	**C-280AP**			
	91.06-95.06	Y32 (ABS)	**B1N011**	**TP-66**				**B2N056**	**C-280AP**			
	96.01-99.06	Y33	**B1N028**	**TP-78**				**B2N056**	**C-280AP**			
	99.06-00.07	Y34	**B1N028**	**TP-78**				**B2N056**				
	00.07-01.12	Y34	**B1N028**	**TP-78**				**B2N056**	**A-480P**			
2500	97.06-99.06	MY33	**B1N028**	**TP-78**				**B2N056**	**C-280AP**			
	97.06-99.06	ENY33	**B1N028**	**TP-78**				**B2N057**	**C-280AP**			
	99.06-00.07	MY34	**B1N028**	**TP-78**				**B2N056**				
	00.07-04.09	MY34	**B1N028**	**TP-78**				**B2N056**	**A-480P**			
	99.06-00.07	ENY34	**B1N036**	**TP-83**				**B2N057**				
	00.07-04.09	ENY34	**B1N036**	**TP-83**				**B2N057**	**A-480P**			
2800	87.06-02.08	UY31, CUY31	**B1N004**	**SP220**				**B2N045**	**C-149P**			
	87.06-02.08	UY31, CUY31 (ABS)	**B1N011**	**TP-66**				**B2N045**	**C-149P**			
	87.06-99.08	TUJY31, UJY31	**B1N011**	**TP-66**				**Drum**				
	91.06-95.06	UY32	**B1N011**	**TP-66**				**B2N056**	**C-280AP**			
	95.06-99.06	UY33	**B1N028**	**TP-78**				**B2N057**	**C-280AP**			
3000	87.06-99.08	PY31 (Brougham)	**B1N004**	**SP220**				**B2N045**	**C-149P**			
	87.06-99.08	PY31 (BroughamVIP, Turbo)	**B1N011**	**TP-66**				**B2N045**	**C-149P**			
	87.06-91.06	YPY31	**B1N004**	**SP220**				**B2N045**	**C-149P**			
	91.06-99.08	YPY31	**B1N011**	**TP-66**				**B2N045**	**C-149P**			
	91.06-93.06	PY32 (VG30E)	**B1N011**	**TP-66**				**B2N056**	**C-280AP**			
	93.06-95.06	PY32(VG30E Brougham J)	**B1N011**	**TP-66**				**B2N056**	**C-280AP**			
	93.06-95.06	PY32(VG30E)	**B1N028**	**TP-78**				**B2N057**	**C-280AP**			
	91.06-95.06	PY32 (VG30D)	**B1N011**	**TP-66**				**B2N056**	**C-280AP**			
	91.06-95.06	PY32 (VG30DT)	**B1N028**	**TP-78**				**B2N057**	**C-280AP**			
	91.06-95.06	PAY32, PBY32	**B1N028**	**TP-78**				**B2N057**	**C-280AP**			
	95.06-99.06	PY33	**B1N028**	**TP-78**				**B2N056**	**C-280AP**			
	95.06-99.06	HY33	**B1N028**	**TP-78**				**B2N056**	**C-280AP**			
	95.06-99.06	HY33 (Turbo) , HBY33	**B1N028**	**TP-78**				**B2N057**	**C-280AP**			
	99.06-00.07	HY34	**B1N028**	**TP-78**				**B2N056**				
	00.07-04.09	HY34	**B1N028**	**TP-78**				**B2N056**	**A-480P**			
	99.06-00.07	HY34 (Turbo)	**B1N036**	**TP-83**				**B2N057**				
	00.07-04.09	HY34 (Turbo)	**B1N036**	**TP-83**				**B2N057**	**A-480P**			
CEDRIC/ GLORIA (Wagon・Van) セドリック/ グロリア (ワゴン・バン)												
2000	83.06-99.06	WY30, VY30, VNY30	**B1N004**	**SP220**				**Drum**				
2800	83.06-93.08	WHY30, WUY30, VHY30, VUY30	**B1N004**	**SP220**				**Drum**				
CEDRIC/ GLORIA (Taxi) セドリック/ グロリア (タクシー)												
2000	87.06-91.05	NJY31		**TP-66**				**Drum**				
	87.06-98.06	MJY31		**SP220**				**Drum**				
	98.06-02.08	MJY31, CMJY31		**TP-66**				**Drum**				
	91.06-	QJY31		**TP-66**				**Drum**				
	04.01-07.08	CBJY31, BJY31		**TP-66**				**Drum**				
2800	87.06-05.12	UY31		**SP220**				**Drum**				

NISSAN

cc	Year	Body Type	Front					Rear				
			Disc Pad	Seal Kit	Caliper		Piston	Disc Pad	Seal Kit	Caliper		Piston
					R	L				R	L	
CEFIRO セフィーロ												
2000	94.08-98.11	A32	**B1N019**	**TP-82**				**B2N022**	**TP-43**			
	98.12-00.12	A33	**B1N039**	**TP-82**				**B2N022**	**TP-43**			
	00.12-01.03	A33	**B1N039**	**TP-82**				**B2N040**	**TP-43**			
	01.03-03.03	A33	**SN596P**	**TP-82**				**B2N040**	**TP-43**			
2500	94.08-98.11	PA32	**B1N019**	**TP-82**				**B2N022**	**TP-43**			
	98.12-00.12	PA33	**B1N039**	**TP-82**				**B2N022**	**TP-43**			
	00.12-02.08	PA33	**B1N039**	**TP-82**				**B2N040**	**TP-43**			
3000	94.08-98.11	HA32	**B1N019**	**TP-82**				**B2N022**	**TP-43**			
CEFIRO WAGON セフィーロ ワゴン												
2000	97.06-00.08	WA32	**B1N019**	**TP-82**				**B2N022**	**TP-43**			
2500	97.06-00.08	WPA32	**B1N019**	**TP-82**				**B2N022**	**TP-43**			
3000	97.06-99.08	WHA32	**B1N019**	**TP-82**				**B2N022**	**TP-43**			
CIMA シーマ												
3000	96.06-97.09	FHY33	**B1N028**	**TP-78**				**B2N057**	**C-280AP**			
	97.09-98.09	FHY33 (TRC)	**B1N028**	**A-450P**				**B2N057**	**C-280AP**			
	97.09-00.07	FHY33	**B1N062**	**A-450P**				**B2N057**	**C-280AP**			
	00.07-01.01	FHY33	**B1N062**	**A-450P**				**B2N057**	**TP-78**			
	01.01-08.02	HF50	**B1N036**	**TP-83**				**B2N057**	**C-373P**			
3500	12.04-	HGY51	**B1N036**	**TP-83**				**B2N096**	**C-745P**			
4100	96.06-00.07	FGY33, FGDY33	**B1N062**	**A-450P**				**B2N057**	**C-280AP**			
	00.07-01.01	FGY33, FGDY33	**B1N062**	**A-450P**				**B2N057**	**TP-78**			
	97.09-01.01	FGNY33	**B1N062**	**A-450P**				**B2N057**	**C-280AP**			
4500	01.01-10.08	GF50, GNF50	**B1N036**	**TP-83**				**B2N057**	**C-373P**			
CIVILIAN シビリアン												
3000	07.08-	EJW41, EHW41, ECW41, EVW41(AT/ 4F)	**J1N018**	**A-617P**				**Drum**				
	08.06-	EJW41, EHW41, ECW41, EVW41(MT/ 5F)	**SN118**	**SP410**			B9N003	**Drum**				
3500	90.06-93.04	BW40, BGW40						**Drum**				
	93.04-99.02	BW40, BGW40	**SN813P**	**A-381P**				**Drum**				
4200	88.05-93.04	RW40, RGW40, RYW40(Front Drum)						**Drum**				
	93.04-99.02	RW40, RGW40, RAW40, RYW40	**SN813P**	**A-381P**				**Drum**				
	99.02-04.08	BVW41, BHW41, BCW41, BJW41	**SN881**	**A-617P**				**Drum**				
4500	04.09-	DCW41, DVW41, DJW41, DHW41	**J1N018**	**A-617P**				**Drum**				
4900	04.10-07.08	ACW41, AVW41, AJW41	**SN118**	**SP410**			B9N003	**Drum**				
	04.09-07.08	AHW41 (LB/ LS School Bus)	**J1N018**	**A-617P**				**Drum**				
	04.10-07.08	AHW41 (LB/ LS)	**SN118**	**SP410**			B9N003	**Drum**				
CLIPPER/ CLIPPER RIO クリッパー/ クリッパーリオ												
660	03.10-	U71V, 71T, 72V, 72T, U71TP, 72TP	**SN876**	**A-607P**				**Drum**				
	07.05-	U71W, 72W	**D1N046**	**A-607P**				**Drum**				
	15.03-	DR17W, DR17V		**TP-80**								
CREW クルー												
2000	94.01-05.12	HK30, THK30, YHK30	**B1N011**	**TP-66**				**Drum**				
2800	93.07-05.12	SK30, TSK30	**B1N011**	**TP-66**				**Drum**				
CREW(Taxi) クルー(タクシー)												
2000	93.07-09.08	QK30	**SX536P**	**TP-66**				**Drum**				
2800	93.07-05.12	SK30	**SX536P**	**TP-66**				**Drum**				
CUBE/ CUBE CUBIC キューブ/ キューブ キュービック												
1300	98.02-99.11	Z10	**SN582P**	**TP-81**				**Drum**				
	99.11-00.09	AZ10	**SN582P**	**TP-81**				**Drum**				
	00.09-02.10	AZ10	**B1N037**	**TP-81**				**Drum**				

cc	Year	Body Type	Front					Rear				
			Disc Pad	Seal Kit	Caliper		Piston	Disc Pad	Seal Kit	Caliper		Piston
					R	L				R	L	
CUBE/ CUBE CUBIC キューブ/ キューブ キュービック												
	99.11-02.10	ANZ10	**B1N037**	**TP-81**				**Drum**				
1400	02.10-08.09	BZ11, BNZ11	**B1N234**	**C-675P**				**Drum**				
	03.09-08.09	BGZ11	**B1N234**	**C-675P**				**Drum**				
	08.09-08.11	BZ11, BGZ11, BNZ11	**B1N234**	**C-675P**				**Drum**				
1500	05.05-08.11	YZ11, YGZ11, YGNZ11	**B1N234**	**C-675P**				**Drum**				
	08.11-	Z12, NZ12	**B1N093**	**TP-95**				**Drum**				
DATSUN TRUCK ダットサン トラック												
1600	89.09-95.08	D21, GD21	**B1N004**	**SP220**				**Drum**				
2000	89.09-92.08	QD21, QYD21	**B1N004**	**SP220**				**Drum**				
	89.09-97.01	QGD21, QMD21	**B1N004**	**SP220**				**Drum**				
	97.01-99.06	QD22	**B1N011**	**TP-66**				**Drum**				
	99.06-02.08	PD22, LPD22	**B1N011**	**TP-66**				**Drum**				
2300	87.08-92.08	PD21, PGD21	**B1N004**	**SP220**				**Drum**				
2400	97.01-02.08	LFMD22	**B1N011**	**TP-66**				**Drum**				
	99.06-02.08	LFD22	**B1N011**	**TP-66**				**Drum**				
2700	89.09-97.01	BMD21	**B1N004**	**SP220**				**Drum**				
	89.09-97.01	BMD21 (Turbo)	**B1N011**	**TP-66**				**Drum**				
	92.08-97.01	BD21, BGD21	**B1N004**	**SP220**				**Drum**				
	97.01-02.08	BD22	**B1N011**	**TP-66**				**Drum**				
	99.06-02.08	LBD22	**B1N011**	**TP-66**				**Drum**				
3200	97.01-02.08	LRMD22	**B1N011**	**TP-66**				**Drum**				
	98.08-99.06	LRMD22 (Autech)	**B1N011**	**TP-66**				**Drum**				
DAYZ デイズ												
660	14.02-	B21A		**A-607P**				**Drum**				
	14.02-	B21A(Turbo)						**Drum**				
DAYZ ROOX デイズルークス												
660	13.06-	B21W		**A-607P**				**Drum**				
	13.06-	B21W(Turbo)						**Drum**				
DUALIS デュアリス												
2000	07.01-	J10, NJ10	**B1N094**	**A-751P**				**B2N095**				
	07.12-10.06	KJ10, KNJ10	**B1N094**	**A-751P**				**B2N095**				
	10.06-	KJ10, KNJ10	**B1N094**	**A-751P**				**B2N096**				
ELGRAND エルグランド												
2500	04.12-09.03	ME51, MNE51	**SN899P**	**A-677P**				**B2N064**	**C-654P**			
	09.03-09.04	ME51, MNE51	**SN899P**	**A-677P**				**B2N064**	**※1**			
	09.04-10.08	ME51, MNE51	**SN899P**	**A-677P**				**B2N064**	**C-745P**			
	10.08-	TE52, TNE52	**B1N109**	**A-677P**				**B2N096**	**C-745P**			
3000	99.08-02.05	ATE50, ATWE50	**B1N062**	**A-450P**				**Drum**				
3200	97.05-99.08	AVE50, AVWE50	**B1N062**	**A-450P**				**Drum**				
3300	97.05-00.08	ALE50, ALWE50	**B1N062**	**A-450P**				**Drum**				
3500	00.08-02.05	APE50, APWE50	**B1N062**	**A-450P**				**Drum**				
	08.07-	FPGE50, FPWE50(PARAMEDIC)	**B1N062**	**A-450P**				**Drum**				
	02.05-09.03	E51, NE51	**SN899P**	**A-677P**				**B2N064**	**C-654P**			
	09.03-09.04	E51, NE51	**SN899P**	**A-677P**				**B2N064**	**※1**			
	09.04-10.08	E51, NE51	**SN899P**	**A-677P**				**B2N064**	**C-745P**			
	10.08-	PE52, PNE52	**B1N109**	**A-677P**				**B2N096**	**C-745P**			
EXPERT エキスパート												
1800	99.06-06.12	VW11, VNW11	**B1N037**	**TP-81**				**Drum**				
2200	99.06-05.12	VEW11, VENW11	**B1N037**	**TP-81**				**Drum**				

※1 C-654P(Caliper and Piston Stamp 4306) or C-745P(Caliper and Piston Stamp 4345)

NISSAN

cc	Year	Body Type	Front					Rear				
			Disc Pad	Seal Kit	Caliper		Piston	Disc Pad	Seal Kit	Caliper		Piston
					R	L				R	L	
FAIRLADY Z フェアレディ Z												
3000	89.07-98.10	GZ32, CZ32, GCZ32	**B1N006**	**SP258**			D9N001	**B2N053**	**A-302P**			
	98.10-00.08	GZ32, CZ32, GCZ32	**B1N006**	**SP258**			D9N001	**B2N053**	**A-497P**			
	92.08-98.10	HZ32 (convertible)	**B1N006**	**SP258**			D9N001	**B2N053**	**A-302P**			
3500	02.07-05.09	Z33, HZ33	**B1N039**	**TP-82**				**B2N064**	**C-654P**			
	05.09-08.12	Z33, HZ33	**B1N036**	**TP-83**				**B2N064**	**C-654P**			
	02.07-03.07	Z33, HZ33 (Brembo)										
	03.08-06.03	Z33, HZ33 (Brembo)										
	06.03-07.01	Z33, HZ33 (Brembo)										
	07.01-08.12	Z33, HZ33 (Brembo)										
3700	08.12-	Z34 (NISMO, Ver.S)	**B1N108**	**A-749P**				**B2N099**	**A-750P**			
	08.12.09.02	Z34 (NISMO)	**B1N036**	**TP-83**				**B2N095**	**C-654P**			
	09.02.09.08	Z34 (NISMO)	**B1N036**	**TP-83**				**B2N095**	**C-745P**			
	09.08-	Z34 (NISMO)	**B1N036**	**TP-83**				**B2N096**	**C-745P**			
	09.10-	HZ34 (Ver.ST)	**B1N108**	**A-749P**				**B2N099**	**A-750P**			
	09.10-	HZ34	**B1N036**	**TP-83**				**B2N096**	**C-754P**			
FUGA フーガ												
2500	04.10-09.04	Y50	**B1N036**	**TP-83**				**B2N064**	**C-654P**			
	09.04-09.08	Y50	**B1N036**	**TP-83**				**B2N095**	**C-654P**			
	09.08-	Y50	**B1N036**	**TP-83**					**C-745P**			
	09.11-	Y51	**B1N036**	**TP-83**					**C-745P**			
3500	04.10-09.04	PY50, PNY50	**B1N036**	**TP-83**				**B2N064**	**C-654P**			
	09.04-09.08	PY50, PNY50	**B1N036**	**TP-83**				**B2N095**	**C-654P**			
	09.08-	PY50, PNY50	**B1N036**	**TP-83**				**B2N096**	**C-745P**			
	10.11-	HY51	**B1N036**	**TP-83**				**B2N096**	**C-745P**			
3700	09.11-	KY51, KNY51	**B1N036**	**TP-83**				**B2N096**	**C-745P**			
	09.11-	KY51 (GT TYPE S)	**B1N108**	**A-749P**				**B2N099**	**A-750P**			
4500	05.08-09.04	GY50	**B1N036**	**TP-83**				**B2N064**	**C-654P**			
	09.04-09.08	GY50	**B1N036**	**TP-83**				**B2N095**	**C-654P**			
	09.08-	GY50	**B1N036**	**TP-83**				**B2N096**	**C-745P**			
GT-R												
3800	07.12-	R35										
HYPER MINI ハイパー ミニ												
EV	99.09-03.03	EAO	**SN582P**	**TP-81**				**SN551P**	**TP-21A**			
INFINITI インフィニティ												
4500	89.10-93.06	G50, HG50		**SP266**					**C-280AP**			
	93.06-94.11	G50, HG50		**SP274**					**C-280AP**			
	94.11-95.11	G50, HG50		**SP274**				**B2N057**	**C-280AP**			
	95.11-98.03	G50, HG50		**SP209**				**B2N057**	**C-280AP**			
JUKE ジューク												
1500	10.06-	YF15	**B1N039**	**TP-82**				**Drum**				
1600	10.11-	NF15	**B1N039**	**TP-113**				**B2N096**				
	10.11-	F15	**B1N039**	**TP-113**				**B2N096**				
KIX キックス												
660	08.10-	H59A	**D1N021**	**SP296**				**Drum**				
LAFESTA ラフェスタ												
2000	04.12-	B30, NB30	**B1N039**	**TP-82**				**Drum**				
RAFESTA HIGHWAY STAR ラフェスタ ハイウェイスター												
2000	11.06-	CWEFWN	**SN918**					**E2N065**				
	11.06-	CWEAWN	**SN918**					**E2N065**				

cc	Year	Body Type	Front					Rear				
			Disc Pad	Seal Kit	Caliper		Piston	Disc Pad	Seal Kit	Caliper		Piston
					R	L				R	L	
LARGO ラルゴ												
2000	93.05-99.06	VW30, VNW30 (7-Passenger)	**B1N021**	**TP-82**				**Drum**				
	93.05-99.06	VNW30 (8-Passenger)	**SN575P**	**TP-66**				**Drum**				
2400	93.05-99.06	W30, CW30	**B1N021**	**TP-82**				**Drum**				
	93.05-99.06	NW30, NCW30	**SN575P**	**TP-66**				**Drum**				
LAUREL ローレル												
2000	93.01-97.06	HC34	**SN571P**	**A-402P**				**B2N056**	**C-280AP**			
	97.06-02.07	HC35	**B1N019**	**TP-82**				**B2N056**	**A-480P**			
2500	93.01-97.06	GC34, GCC34	**B1N019**	**TP-82**				**B2N056**	**C-280AP**			
	94.01-97.06	GC34, GCC34 (Turbo)	**B1N023**	**TP-60**				**B2N056**	**C-280AP**			
	94.09-97.06	GNC34	**B1N023**	**TP-60**				**B2N056**	**C-280AP**			
	97.06-02.07	GC35	**B1N019**	**TP-82**				**B2N056**	**A-480P**			
	97.06-98.09	GC35 (Turbo) , GCC35	**B1N023**	**TP-60**				**B2N056**	**A-480P**			
	98.09-02.08	GC35 (Turbo) , GCC35	**B1N036**	**TP-83**				**B2N056**	**A-480P**			
	97.06-02.08	GNC35	**B1N023**	**TP-60**				**B2N056**	**A-480P**			
2800	93.01-97.06	SC34	**SN571P**	**A-402P**				**B2N056**	**A-480P**			
	97.06-02.08	SC35	**B1N019**	**TP-82**				**B2N056**	**A-480P**			
LEAF リーフ												
EV	10.12-13.12	ZE0	**B1N077**	**TP-83**				**B2N096**	**A-745P**			
	13.12-	AZE0						**SN509P**	**A-745P**			
LEOPARD/ LEOPARD J-FERIE レパード/ レパード Jフェリー												
2000	97.01-99.06	JY33	**B1N028**	**TP-78**				**B2N056**	**C-280AP**			
2500	97.10-99.06	JENY33	**B1N028**	**TP-78**				**B2N057**	**C-280AP**			
	97.10-99.06	JMY33	**B1N028**	**TP-78**				**B2N056**	**C-280AP**			
3000	96.03-97.10	JPY33	**B1N028**	**TP-78**				**B2N056**	**C-280AP**			
	96.03-99.06	JHY33 , JHBY33	**B1N028**	**TP-78**				**B2N056**	**C-280AP**			
	96.03-99.06	JHY33 (Turbo)	**B1N028**	**TP-78**				**B2N057**	**C-280AP**			
MARCH マーチ												
1000	92.01-93.11	K11	**SN538P**	**TP-18**				**Drum**				
	83.11-97.05	K11	**SN538P**	**TP-58**				**Drum**				
	92.01-97.05	K11 (ABS)	**SN538P**	**TP-58**				**B2N026**	**TP-59**			
	97.05-99.11	K11	**SN590P**	**TP-13**				**Drum**				
	99.11-02.02	K11, WK11	**B1N037**	**TP-81**				**Drum**				
	02.02-03.07	K12	**B1N234**	**C-675P**				**Drum**				
1200	02.02-08.09	AK12	**B1N234**	**C-675P**				**Drum**				
	08.09-10.07	AK12	**B1N234**	**C-675P**				**Drum**				
	10.07-	K13, NK13	**B1N093**	**TP-116**				**Drum**				
1300	92.01-93.11	HK11	**SN538P**	**TP-18**				**Drum**				
	93.11-97.05	HK11	**SN538P**	**TP-58**				**Drum**				
	92.01-97.05	HK11 (ABS)	**SN538P**	**TP-58**				**B2N026**	**TP-59**			
	97.05-99.11	HK11	**SN590P**	**TP-13**				**Drum**				
	97.05-99.11	FHK11	**SN590P**	**TP-13**				**Drum**				
	99.11-02.02	AK11, ANK11, WAK11	**B1N037**	**TP-81**				**Drum**				
1400	02.02-05.08	BK12	**B1N234**	**C-675P**				**Drum**				
	02.02-08.09	BNK12	**B1N234**	**C-675P**				**Drum**				
	08.09-10.07	BNK12	**B1N234**	**C-675P**				**Drum**				
1500	02.02-08.09	YK12	**B1N234**	**C-675P**				**Drum**				
	08.09-10.07	YK12	**B1N234**	**C-675P**				**Drum**				
C+C MICRA C+C マイクラ												
1600	07.07-	FHZK12						**Drum**				

NISSAN

cc	Year	Body Type	Front					Rear				
			Disc Pad	Seal Kit	Caliper		Piston	Disc Pad	Seal Kit	Caliper		Piston
					R	L				R	L	
MISTRAL ミストラル												
2700	94.02-98.07	R20, KR20	**B1N011**	**TP-78**				**Drum**				
MURANO ムラーノ												
2500	04.09-08.09	TZ50	**B1N079**	**TP-98**				**B2N064**	**C-654P**			
	08.09-09.10	TNZ51	**B1N079**	**TP-98**				**B2N096**	**C-745P**			
	09.10-	TNZ51	**B1N079**	**TP-98**				**B2N096**	**C-745P**			
	10.01-	TZ51	**B1N079**	**TP-98**				**B2N096**	**C-745P**			
3500	04.09-08.09	PZ50, PNZ50	**B1N079**	**TP-98**				**B2N064**	**C-654P**			
	08.09-09.10	PNZ51	**B1N079**	**TP-98**				**B2N096**	**C-745P**			
	09.10-	PNZ51	**B1N079**	**TP-98**				**B2N096**	**C-745P**			
MOCO モコ												
660	02.04-04.12	MG21S	**H1N009**	**TP-80**				**Drum**				
	04.12-06.02	MG21S 2WD C/#413992~, 4WD C/#136316~	**SN935**	**TP-80**				**Drum**				
	04.12-06.02	MG21S (Turbo)	**H1N009**	**TP-80**				**Drum**				
	06.02-11.02	MG22S	**SN935**	**TP-80**				**Drum**				
	11.02-	MG33S	**H1N052**	**TP-80**				**Drum**				
NOTE ノート												
1200	12.09-15.10	NE12	**B1N093**	**TP-95**								
1500	05.01-08.09	E11, NE11	**B1N234**	**C-675P**				**Drum**				
	08.09-	E11, NE11	**B1N234**	**C-675P**				**Drum**				
1600	07.12-	ZE11	**B1N234**	**C-675P**				**Drum**				
NV100CLIPPER NV100クリッパー												
660	12.01-	U71V, U72V		**A-607P**				**Drum**				
NV200 VANETTE/Van NV200バネット/バン												
1600	09.05-	M20, VM20	**SN959P**	**TP-114**				**Drum**				
NV350 CARAVAN(Van・Truck) NV350キャラバン(バン・トラック)												
2000	12.06-	VR2E26	**B1N235**	**A-665P**				**Drum**				
2500	12.06-	CS4E26, KS2E26, KS4E26, VW2E26, VW6E26, CW4E26, CW8E26	**B1N235**	**A-665P**				**Drum**				
	12.12-	DS4E26, DW4E26	**B1N235**	**A-665P**				**Drum**				
OTTI オッティ												
660	05.06-06.10	H91W	**D1N046**	**A-607P**				**Drum**				
	06.10-07.08	H92W	SN882 or D1N046	**A-607P**				**Drum**				
	07.08-	H92W	**SN876**	**A-607P**				**Drum**				
	07.08-	H92W (Turbo)	SN882 or D1N046	**A-607P**				**Drum**				
Patrol パトロール												
5600	06.11-	Y62			B5R001	B5L001	B9N004 A9N039					
PINO ピノ												
660	07.01-09.11	HC24S	**SN935**	**TP-80**				**Drum**				
PRAIRIE/PRAIRIE LIBERTY プレーリー/プレーリー リバティ												
2000	88.09-95.08	M11	**B1N020**	**TP-82**				**Drum**				
	90.09-95.08	NM11 (4WD 8-passenger)	**B1N021**	**TP-82**					**TP-43**			
	88.09-95.08	NM11 (4WD)	**B1N020**	**TP-82**					**TP-43**			
	95.08-98.11	PM11	**B1N021**	**TP-82**				**Drum**				
	95.08-98.11	PM11 (ABS)	**B1N021**	**TP-82**				**B2N022**	**TP-43**			
	95.08-98.11	PNM11	**B1N021**	**TP-82**				**Drum**				
	95.08-98.11	PNM11 (ABS)	**B1N021**	**TP-82**				**B2N022**	**TP-43**			
	98.11-01.05	PM12, PNM12	**B1N028**	**TP-78**				**Drum**				
	01.05-04.12	RM12, RNM12	**B1N028**	**TP-78**				**Drum**				

C/#=Chassis Number

cc	Year	Body Type	Front					Rear				
			Disc Pad	Seal Kit	Caliper		Piston	Disc Pad	Seal Kit	Caliper		Piston
					R	L				R	L	
PRAIRIE/PRAIRIE LIBERTY プレーリー/プレーリー リバティ												
2400	90.09-95.08	HM11	**B1N020**	**TP-82**				**Drum**				
	90.09-95.08	HNM11	**B1N021**	**TP-82**				**Drum**				
	90.09-95.08	HNM11 (ABS)	**B1N021**	**TP-82**					**TP-43**			
PRESAGE プレサージュ												
2400	98.06-01.08	U30, NU30	**B1N062**	**A-450P**				**Drum**				
2500	98.06-01.08	VU30, VNU30	**B1N062**	**A-450P**				**Drum**				
	01.08-03.06	TU30, TNU30	**B1N062**	**A-450P**				**Drum**				
	03.07-09.06	TU31, TNU31	**SN899P**	**A-677P**				**B2N064**	**C-654P**			
	09.06-09.09	TU31, TNU31	**SN899P**	**A-677P**				**B2N064**	**C-745P**			
3000	98.06-03.06	HU30	**B1N062**	**A-450P**				**Drum**				
3500	03.07-09.06	PU31, PNU31	**SN899P**	**A-677P**				**B2N064**	**C-654P**			
	09.06-09.09	PU31, PNU31	**SN899P**	**A-677P**				**B2N064**	**C-745P**			
PRESIDENT プレジデント												
4500	90.10-94.05	JG50, JHG50, PG50, PHG50		**SP266**			E9N003		**C-280AP**			
	94.05-95.11	JG50, JHG50, PG50, PHG50		**SP274**			E9N003		**C-280AP**			
	95.11-98.12	JG50, JHG50, PG50, PHG50		**SP209**			E9N003		**C-280AP**			
	98.12-02.08	JG50, JHG50, PG50, PHG50		**A-450P**					**C-280AP**			
	03.10-10.08	PGF50	**B1N036**	**TP-83**				**B2N057**	**C-373P**			
PRESEA プレセア												
1500	95.01-00.08	R11	**B1N237**	**TP-81**				**Drum**				
	95.01-00.08	R11 (ABS)	**B1N237**	**TP-81**				**B2N029**	**TP-70**			
1800	95.01-00.08	PR11	**B1N237**	**TP-81**				**Drum**				
	95.01-00.08	PR11 (ABS)	**B1N237**	**TP-81**				**B2N029**	**TP-70**			
2000	95.01-97.08	HR11	**B1N237**	**TP-81**				**Drum**				
	95.01-97.08	HR11 (ABS)	**B1N237**	**TP-81**				**B2N029**	**TP-70**			
	97.08-00.08	HR11	**B1N237**	**TP-81**				**B2N029**	**TP-70**			
PRIMERA/PRIMERA CAMINO プリメーラ/プリメーラ カミノ												
1800	95.09-97.09	P11 (Rear Drum)	**B1N020**	**TP-82**				**Drum**				
	96.08-97.09	P11 (Rear Disc)	**B1N020**	**TP-82**				**B2N022**	**TP-43**			
	97.09-98.09	P11	**B1N020**	**TP-82**				**Drum**				
	98.09-01.01	QP11	**B1N020**	**TP-82**				**Drum**				
	02.02-05.12	QP12	**SN596P**	**TP-82**				**B2N040**	**TP-43**			
2000	97.09-00.11	HP11 (Te-V)	**B1N019**	**TP-82**				**B2N022**	**TP-43**			
	00.11-01.01	HP11 (Te-V)	**B1N019**	**TP-82**				**B2N040**	**TP-43**			
	95.09-00.11	HP11	**B1N020**	**TP-82**				**B2N022**	**TP-43**			
	00.11-01.01	HP11	**B1N020**	**TP-82**				**B2N040**	**TP-43**			
	95.09-97.09	HNP11	**B1N020**	**TP-82**				**B2N022**	**TP-43**			
	97.09-00.11	HNP11	**B1N019**	**TP-82**				**B2N022**	**TP-43**			
	00.11-01.01	HNP11	**B1N019**	**TP-82**				**B2N040**	**TP-43**			
	97.02-98.09	FHP11	**B1N020**	**TP-82**				**B2N022**	**TP-43**			
	01.01-05.12	TP12	**SN596P**	**TP-82**				**B2N040**	**TP-43**			
	01.08-03.07	HP12	**SN596P**	**TP-82**				**B2N040**	**TP-43**			
	01.08-05.12	TNP12	**SN596P**	**TP-82**				**B2N064**	**A-654P**			
2500	01.01-05.12	RP12	**SN596P**	**TP-82**				**B2N040**	**TP-43**			
PRIMERA WAGON プリメーラ ワゴン												
1800	97.09-98.09	WP11	**B1N020**	**TP-82**				**B2N022**	**TP-43**			
	98.09-00.11	WQP11	**B1N020**	**TP-82**				**B2N022**	**TP-43**			
	00.11-01.01	WQP11	**B1N020**	**TP-82**				**B2N040**	**TP-43**			
2000	97.09-00.11	WHP11	**B1N019**	**TP-82**				**B2N022**	**TP-43**			

NISSAN

cc	Year	Body Type	Front					Rear				
			Disc Pad	Seal Kit	Caliper		Piston	Disc Pad	Seal Kit	Caliper		Piston
					R	L				R	L	
PRIMERA WAGON プリメーラ ワゴン												
	00.11-01.01	WHP11	**B1N019**	**TP-82**				**B2N040**	**TP-43**			
	97.09-01.01	WHNP11	**B1N019**	**TP-82**				**B2N022**	**TP-21A**			
	01.01-05.12	WTNP12	**SN596P**	**TP-82**				**B2N064**	**A-654P**			
	01.01-05.12	WTP12	**SN596P**	**TP-82**				**B2N040**	**TP-43**			
	01.08-03.07	WHP12	**SN596P**	**TP-82**				**B2N040**	**TP-43**			
2500	01.01-05.12	WRP12	**SN596P**	**TP-82**				**B2N040**	**TP-43**			
PULSAR/PULSAR SERIE/LUCINO パルサー/パルサー セリエ/ルキノ												
1500	94.05-99.04	FB14	**B1N237**	**TP-81**				**Drum**				
	94.05-99.04	FB14 (ABS)	**B1N237**	**TP-81**				**B2N029**	**TP-70**			
	95.01-00.08	FN15 (Rear Drum)	**B1N237**	**TP-81**				**Drum**				
	95.01-00.09	FN15 (Rear Disc)	**B1N237**	**TP-81**				**B2N029**	**TP-70**			
	95.01-00.08	FNN15	**B1N237**	**TP-81**				**Drum**				
	95.01-00.08	FNN15 (ABS)	**B1N237**	**TP-81**				**SN792P**	**A-119P+ A-214LP**			
1600	97.08-99.04	JB14	**SN803P**	**C-350P**				**B2N022**	**TP-43**			
	95.01-00.08	EN15	**B1N237**	**TP-81**				**Drum**				
	95.01-00.08	EN15 (ABS)	**B1N237**	**TP-81**				**B2N029**	**TP-70**			
	97.09-00.08	JN15	**SN803P**	**C-350P**				**B2N022**	**TP-43**			
1800	94.05-97.08	HB14	**B1N237**	**TP-81**				**B2N029**	**TP-70**			
	97.09-00.08	HN15 (15inch+195Tire)	**SN803P**	**C-350P**				**B2N022**	**TP-43**			
	95.01-97.09	HN15 (15inch+195Tire)	**SN803P**	**A-350P**				**B2N022**	**TP-43**			
	95.01-00.08	HN15	**B1N237**	**TP-81**				**B2N029**	**TP-70**			
	96.05-97.09	HNN15	**SN803P**	**A-350P**				**B2N022**	**TP-43**			
	97.09-00.08	HNN15	**SN803P**	**C-350P**				**B2N022**	**TP-43**			
2000	95.01-97.09	SN15	**B1N237**	**TP-81**				**Drum**				
	97.09-00.08	SN15	**B1N237**	**TP-81**				**SN792P**	**A-119P+ A-214LP**			
	95.01-00.08	SNN15 (Rear Drum)	**B1N237**	**TP-81**				**Drum**				
	95.01-00.08	SNN15 (Rear Disc)	**B1N237**	**TP-81**				**SN792P**	**A-119P+ A-214LP**			
RASHEEN ラシーン												
1500	94.12-00.08	RFNB14	**B1N237**	**TP-81**				**SN792P**	**A-119P+ A-214LP**			
1800	97.01-98.01	RHNB14	**SN803P**	**A-350P**				**B2N022**	**TP-43**			
	98.01-00.08	RHNB14	**SN803P**	**C-350P**				**B2N022**	**TP-43**			
2000	98.01-00.08	RKNB14	**SN803P**	**C-350P**				**B2N022**	**TP-43**			
R' NESSA ルネッサ												
2000	97.10-01.07	N30	**B1N028**	**TP-78**				**Drum**				
	97.10-01.07	NN30	**B1N062**	**A-450P**				**Drum**				
2400	97.10-01.07	PNN30	**B1N062**	**A-450P**				**Drum**				
R' NESSA EV ルネッサ EV												
EV	98.05-00.11	EVN30 (EV)	**B1N062**	**A-450P**				**Drum**				
ROOX ルークス												
660	09.12-	ML21S	**SN935**	**TP-80**				**Drum**				
SAFARI/PATOROL サファリ/パトロール												
2800	94.10-97.10	WYY60		**TP-15**				**SN839P**	**A-276P**			
	97.10-99.09	WYY61	**B1N034**	**TP-76**				**B1N018**	**TP-77**			
3000	99.09-02.11	WTY61	**B1N034**	**TP-76**				**B1N018**	**TP-77**			
4200	87.10-91.10	VRY60, VRGY60, FGY60	**SN539**	**TP-15**				**SN791**	**A-276P**			

cc	Year	Body Type	Front					Rear				
			Disc Pad	Seal Kit	Caliper		Piston	Disc Pad	Seal Kit	Caliper		Piston
					R	L				R	L	
SAFARI/PATOROL サファリ/パトロール												
	91.02-91.10	WRGY60 (Std-foof 4dr)	**SN539**	**TP-15**				**SN791**	**A-276P**			
	87.10-94.10	FGY60 (Fire Engine)	**SN539**	**TP-15**				**Drum**				
	91.10-94.10	WGY60 (Rear Drum)	**SN566**	**SP270**				**Drum**				
	91.10-93.08	WGY60 (Rear Disc)	**SN566**	**SP270**			B9N002	**SN791**	**A-276P**			
	93.08-97.10	WGY60 (Rear Disc)	**SN566**	**SP270**			B9N002	**SN839P**	**A-276P**			
	91.10-93.08	VRY60 (Rear Drum)		**TP-15**				**Drum**				
	91.10-97.10	VRGY60, WRY60, WRGY60(Rear Drum)		**TP-15**				**Drum**				
	91.10-93.08	VRY60, VRGY60, WRY60, WRGY60 (Rear Disc)		**TP-15**				**SN791**	**A-276P**			
	93.08-97.10	VRY60, VRGY60, WRY60, WRGY60 (Rear Disc)		**TP-15**				**SN839P**	**A-276P**			
	94.10-97.10	FGY60 (Fire Engine)		**TP-15**				**Drum**				
	94.10-97.10	VRGY60, WRY60, WRGY60		**TP-15**				**SN839P**	**A-276P**			
	94.10-97.10	WGY60	**SN566**	**SP270**			B9N002	**SN839P**	**A-276P**			
	97.10-99.09	WRGY61	**B1N034**	**TP-76**				**B1N018**	**TP-77**			
4500	97.10-02.11	WGY61	**B1N034**	**TP-76**				**B1N018**	**TP-77**			
4800	02.11-06.07	WFGY61	**SN905P**	**TP-109**					**TP-100**			
5600	10.02-	Y62			B5R001	B5L001	B9N004 A9N039					
SERENA セレナ												
2000	99.06-02.01	PC24, PNC24	**B1N062**	**A-450P**				**Drum**				
	02.01-05.05	TC24, TNC24	**B1N062**	**A-450P**				**Drum**				
	05.05-07.03	C25, CC25, NC25, CNC25	**B1N077**	**TP-83**				**※1**	**A-654P**			
	07.03-10.06	C25, CC25, NC25, CNC25	**B1N077**	**TP-83**				**B2N095**	**A-654AP**			
	10.6-10.11	C25, CC25, NC25, CNC25	**B1N077**	**TP-83**				**B2N096**	**A-654AP**			
	10.11-	C26, NC26, FC26	**B1N077**	**TP-83**				**B2N096**	**A-654AP**			
2500	99.06-02.01	VC24, VNC24	**B1N062**	**A-450P**				**Drum**				
	02.01-05.05	RC24	**B1N062**	**A-450P**				**Drum**				
SKYLINE スカイライン												
2000	93.08-98.05	HR33	**B1N020**	**TP-82**				**B2N056**	**A-280P**			
	98.05-00.07	HR34 (16inch)	**B1N023**	**TP-60**				**B2N056**	**A-280P**			
	00.07-01.06	HR34 (16inch)	**B1N023**	**TP-60**				**B2N056**	**A-475P**			
	98.05-00.07	HR34	**SN571P**	**C-402P**				**B2N056**	**A-480P**			
	00.07-01.06	HR34	**SN571P**	**C-402P**				**B2N056**	**A-475P**			
	14.06-	ZV37	**SN204P**						**C-745P**			
	14.11-	YV37	**SN204P**					**SN509P**	**C-745P**			
2500	93.08-98.05	ER33	**B1N023**	**TP-60**				**B2N056**	**A-280P**			
	93.08-98.05	ER33 (Turbo)	**B1N006**	**SP258**			D9N001	**B2N053**	**A-302P**			
	96.01-98.05	ER33 (GTS25 typeSS)	**B1N006**	**SP258**			D9N001	**B2N053**	**A-302P**			
	93.08-98.05	ECR33	**B1N023**	**TP-60**				**B2N056**	**A-280P**			
	93.08-98.05	ECR33 (Turbo)	**B1N006**	**SP258**			D9N001	**B2N053**	**A-302P**			
	93.11-98.05	ENR33	**B1N023**	**TP-60**				**B2N056**	**A-280P**			
	98.05-01.06	ER34	**B1N023**	**TP-60**				**B2N056**	**A-480P**			
	99.01-01.06	ER34 (4WS)	**B1N006**	**SP258**			D9N001	**B2N053**	**A-497P**			
	98.05-01.06	ER34 (Turbo)	**B1N006**	**SP258**			D9N001	**B2N053**	**A-497P**			
	98.05-00.07	ENR34	**B1N023**	**TP-60**				**B2N056**	**A-480P**			
	00.07-01.06	ENR34	**B1N023**	**TP-60**				**B2N056**	**A-475P**			
	01.06-03.01	V35	**SN596P**	**TP-82**				**B2N064**	**C-654P**			
	03.01-06.11	V35	**B1N039**	**TP-82**				**B2N064**	**C-654P**			
	01.09-06.11	NV35	**SN596P**	**TP-82**				**B2N064**	**C-654P**			
	06.11-07.11	V36, NV36	**B1N036**	**TP-83**				**B2N095**	**C-654P**			

※1 SN891P-with Shim for retaining pin. SN505P-w/ o Shim for retaining pin.

NISSAN

cc	Year	Body Type	Front					Rear				
			Disc Pad	Seal Kit	Caliper		Piston	Disc Pad	Seal Kit	Caliper		Piston
					R	L				R	L	
SKYLINE スカイライン												
	07.11-09.02	V36, NV36	**B1N036**	**TP-83**				**B2N095**	**C-654P**			
	09.02-10.01	V36, NV36	**B1N036**	**TP-83**				**B2N095**	**C-745P**			
	10.01-	V36, NV36	**B1N036**	**TP-83**				**B2N096**	**C-745P**			
	07.11-10.01	V36 (GT TypeS)						**B2N095**	**A-745P**			
	10.01-	V36 (GT TypeS)						**B2N095**	**A-745P**			
2600	95.01-99.01	BCNR33 (GT-R) (Brembo)										
	99.01-02.08	BNR34 (GT-R) (Brembo)										
3000	01.06-03.01	HV35	**SN596P**	**TP-82**				**B2N064**	**C-654P**			
	03.01-04.11	HV35	**B1N039**	**TP-82**				**B2N064**	**C-654P**			
3500	02.01-04.11	PV35, CPV35	**B1N039**	**TP-82**				**B2N064**	**C-654P**			
	03.01-04.11	CPV35 (Brembo)										
	04.11-06.11	PV35 (CVT AT, F5)	**B1N039**	**TP-82**				**B2N064**	**C-654P**			
	04.11-06.11	PV35 (MT, F6)	**B1N036**	**TP-83**				**B2N064**	**C-654P**			
	04.11-07.10	CPV35	**B1N036**	**TP-83**				**B2N064**	**C-654P**			
	06.11-08.12	PV36 (GT, GT Type P)	**B1N036**	**TP-83**				**B2N095**	**C-654P**			
	06.11-08.12	PV36 (GT Type S, SP)						**B2N095**				
	13.11-	HV37/ HNV37(HYBRID, HYBRID typeP)										
	13.11-	HV37/ HNV37(HYBRID typeSP)		**A-749P**					**A-750P**			
3700	08.12-09.02	KV36 (GT Type P)	**B1N036**	**TP-83**				**B2N095**	**C-654P**			
	09.02-10.01	KV36 (GT Type P)	**B1N036**	**TP-83**				**B2N095**	**C-745P**			
	08.12-	KV36 (GT Type S, SP)						**B2N095**	**A-745P**			
	07.10-09.01	CKV36 (GT, GT Type P)						**B2N095**	**A-745P**			
	09.01-	CKV36 (GT, GT Type P)						**B2N095**	**A-745P**			
	07.10-08.03	CKV36 (GT Type S, SP)	**B1N108**	**A-749P**				**B2N099**	**A-750P**			
	08.03-09.06	CKV36 (GT Type S, SP)	**B1N108**	**A-749P**				**B2N099**	**A-750P**			
	09.06-	CKV36 (GT Type S, SP)	**B1N108**	**A-749P**				**B2N099**	**A-750P**			
SKYLINE CROSSOVER スカイライン クロスオーバー												
3700	09.07-	J50, NJ50	**B1N036**					**B2N096**	**C-745P**			
SILVIA シルビア												
2000	93.10-96.06	S14, CS14	**B1N018**	**TP-42**				**B2N016**	**TP-21A**			
	96.06-99.01	S14, CS14	**B1N020**	**TP-82**				**B2N016**	**TP-21A**			
	93.10-99.01	S14, CS14 (Turbo)	**B1N006**	**SP258**			D9N001	**B2N016**	**TP-21A**			
	99.01-02.08	S15	**B1N019**	**TP-82**				**B2N016**	**TP-21A**			
	99.01-02.08	S15 (Turbo)	**B1N002**	**SP258**			D9N001	**B2N016**	**TP-21A**			
	99.09-02.08	S15 (Autech)	**B1N002**	**SP258**			D9N001	**B2N016**	**TP-21A**			
STAGEA ステージア												
2000	96.09-97.08	WHC34	**B1N019**	**TP-82**				**B2N056**	**C-280AP**			
	97.08-01.10	WHC34	**B1N019**	**TP-82**				**B2N056**	**A-480P**			
2500	96.09-97.08	WGC34	**B1N019**	**TP-82**				**B2N056**	**C-280AP**			
	97.08-01.10	WGC34	**B1N019**	**TP-82**				**B2N056**	**A-480P**			
	98.10-01.10	WGC34 (Turbo)	**B1N036**	**TP-83**				**B2N057**	**C-280AP**			
	96.09-97.08	WGNC34	**B1N023**	**TP-60**				**B2N056**	**C-280AP**			
	97.08-01.10	WGNC34	**B1N023**	**TP-60**				**B2N056**	**A-480P**			
	96.09-97.08	WGNC34 (Turbo)	**B1N028**	**TP-78**				**B2N056**	**C-280AP**			
	97.08-98.08	WGNC34 (Turbo)	**B1N028**	**TP-78**				**B2N056**	**A-480P**			
	98.08-01.10	WGNC34 (Turbo)	**B1N036**	**TP-83**				**B2N057**	**C-280AP**			
	01.10-04.03	M35	**SN596P**	**TP-82**				**B2N064**	**C-654P**			
	04.03-06.11	M35	**B1N039**	**TP-82**				**B2N064**	**C-654P**			
	06.11-07.07	M35	**SN596P**	**TP-82**				**B2N064**	**C-654P**			

cc	Year	Body Type	Front					Rear				
			Disc Pad	Seal Kit	Caliper		Piston	Disc Pad	Seal Kit	Caliper		Piston
					R	L				R	L	
STAGEA ステージア												
	01.10-07.07	NM35	**SN596P**	**TP-82**				**B2N064**	**C-654P**			
2600	97.11-03.01	AWC34 (Brembo)										
3000	01.10-04.03	HM35	**SN596P**	**TP-82**				**B2N064**	**C-654P**			
	04.03-04.08	HM35	**B1N039**	**TP-82**				**B2N064**	**C-654P**			
3500	03.06-04.08	AM35 (Autech Axis)	**B1N039**	**TP-82**				**B2N064**	**C-654P**			
	04.08-06.11	PM35	**B1N039**	**TP-82**				**B2N064**	**C-654P**			
	06.11-07.07	PM35	**SN596P**	**TP-82**				**B2N064**	**C-654P**			
	04.08-07.07	PNM35	**SN596P**	**TP-82**				**B2N064**	**C-654P**			
SUNNY サニー												
1300	94.01-98.10	B14	**B1N237**	**TP-13**				**Drum**				
	98.10-04.10	B15	**B1N037**	**TP-81**				**Drum**				
1500	94.01-98.10	FB14	**B1N237**	**TP-13**				**Drum**				
	94.01-98.10	FB14 (ABS)	**B1N237**	**TP-13**				**B2N029**	**TP-70**			
	94.01-98.10	FNB14	**B1N237**	**TP-13**				**Drum**				
	94.01-98.10	FNB14 (ABS)	**B1N237**	**TP-13**				**SN792P**	**A-119P+ A-214LP**			
	98.10-04.10	FB15, FNB15	**B1N037**	**TP-81**				**Drum**				
1600	94.01-98.10	EB14	**B1N237**	**TP-13**				**Drum**				
	94.01-98.10	EB14 (ABS)	**B1N237**	**TP-13**				**B2N029**	**TP-70**			
	97.08-99.04	JB14 (VZ-R)	**SN803P**	**C-350P**				**B2N022**	**TP-43**			
	98.10-01.05	JB15	**B1N019**	**TP-82**				**B2N022**	**TP-43**			
	01.05-02.05	JB15	**B1N019**	**TP-82**				**B2N040**	**TP-43**			
1800	94.01-98.10	HB14	**B1N237**	**TP-13**				**B2N029**	**TP-70**			
	95.09-97.08	HB14 (Autech)	**SN803P**	**C-350P**				**B2N022**	**TP-43**			
	98.10-02.05	QB15	**B1N037**	**TP-81**				**Drum**				
2000	94.01-98.10	SB14	**B1N237**	**TP-13**				**Drum**				
	94.01-98.10	SB14 (ABS)	**B1N237**	**TP-13**				**B2N029**	**TP-70**			
	94.01-98.10	SNB14	**B1N237**	**TP-13**				**Drum**				
	94.01-98.10	SNB14 (ABS)	**B1N237**	**TP-13**				**SN792P**	**A-119P+ A-214LP**			
2200	99.09-02.05	SB15	**B1N037**	**TP-81**				**Drum**				
SUNNY Truck サニー トラック												
1200	89.10-94.03	B122, GB122	**SN831**	**A-311P**				**Drum**				
SYLPHY シルフィ												
1800	12.12-	TB17	**B1N039**	**TP-82**				**Drum**				
TEANA ティアナ												
2300	03.02-08.06	J31	**SN596P**	**TP-82**				**B2N064**	**A-654P**			
2500	03.02-08.06	TNJ31	**SN596P**	**TP-82**				**B2N064**	**A-654P**			
	08.06-10.06	J32, TNJ32	**B1N039**	**TP-113**				**B2N095**				
	10.07-	J32, TNJ32	**B1N039**	**TP-113**				**B2N096**				
3500	03.02-08.06	PJ31	**SN596P**	**TP-82**				**B2N064**	**A-654P**			
	08.06-10.07	PJ32	**B1N039**	**TP-113**				**B2N095**				
	10.07-	PJ32	**B1N039**	**TP-113**				**B2N096**				
TERRANO/TERRANO REGULUS テラノ/テラノ レグラス												
2700	95.09-99.02	PR50	**B1N062**	**A-450P**				**Drum**				
3000	99.02-02.08	TR50, JTR50	**B1N062**	**A-450P**				**Drum**				
3200	96.08-99.02	RR50, JRR50	**B1N062**	**A-450P**				**Drum**				
3300	95.09-02.08	LR50, JLR50, LUR50, JLUR50	**B1N062**	**A-450P**				**Drum**				

NISSAN

cc	Year	Body Type	Front					Rear				
			Disc Pad	Seal Kit	Caliper		Piston	Disc Pad	Seal Kit	Caliper		Piston
					R	L				R	L	
TIIDA/TIIDA LATIO ティーダ/ティーダ ラティオ												
1500	04.10-	C11, SC11, NC11, SNC11	**B1N234**	**C-675P**				**Drum**				
1600	08.09-	SZC11	**B1N234**	**C-675P**				**Drum**				
1800	05.01-	JC11, SJC11	**B1N234**	**C-675P**				**Drum**				
1200	12.10-	N17	**B1N093**	**TP-95**				**Drum**				
TINO ティーノ												
1800	98.12-01.01	V10	**B1N039**	**TP-82**				**B2N022**	**TP-43**			
	01.01-03.03	V10	**B1N039**	**TP-82**				**B2N040**	**TP-43**			
	00.03-01.01	V10 (HV)	**B1N039**	**TP-82**				**B2N022**	**TP-43**			
	01.01-02.10	V10 (HV)	**B1N039**	**TP-82**				**B2N040**	**TP-43**			
2000	98.12-01.01	HV10	**B1N039**	**TP-82**				**B2N022**	**TP-43**			
	01.01-02.10	HV10	**B1N039**	**TP-82**				**B2N040**	**TP-43**			
VANETTE (Van・Truck) バネット (バン・トラック)												
1500	94.04-99.07	SE58TN, SS58VN	**E1N009**	**SP236**				**Drum**				
1600	91.06-98.01	VAJC23	**SN783P**	**A-240P**				**Drum**				
	98.01-99.07	VAJC23	**SN853P**	**A-240P**				**Drum**				
1800	94.04-99.07	SE88MN, SS88VN	**E1N009**	**SP236**				**Drum**				
	94.04-99.07	SE88TN, SS88MN	**E1N009**	**SP236**				**Drum**				
	99.06-10.07	SK82LN, 82MN, 82TN, 82VN	**SN281P**	**SP237**				**Drum**				
	10.08-	SKP2MN, 2TN, 2LN	**SN281P**	**SP237**				**Drum**				
2000	91.06-98.01	VVJC23	**SN783P**	**A-240P**				**Drum**				
	98.01-99.07	VVJC23	**SN853P**	**A-240P**				**Drum**				
	03.12-10.07	SKF2LN, 2MN, 2TN, 2VN	**SN281P**	**SP237**				**Drum**				
2200	94.04-99.07	SE28TN , SE28MN, SS28VN (W-tire)	**E1N009**	**SP236**				**Drum**				
	99.06-03.12	SK22MN, 22VN, 22LN, 22TN	**SN281P**	**SP237**				**Drum**				
VANETTE SERENA バネット セレナ												
1600	91.06-94.05	KAJC23 (FE)	**※1**	**A-240P**				**Drum**				
	91.06-97.01	KAJC23 (FG)	**B1N021**	**TP-82**				**Drum**				
	91.06-94.05	VAJC23	**※1**	**TP-82**				**Drum**				
	94.05-99.06	VAJC23	**※1**	**A-240P**				**Drum**				
2000	91.06-93.08	KVJC23 (FE)	**※1**	**A-240P**				**Drum**				
	91.06-93.08	KVJC23 (FG)	**B1N021**	**TP-82**				**Drum**				
	91.06-99.06	VVJC23	**※1**	**A-240P**				**Drum**				
	91.06-99.06	KBC23, KBCC23, KVC23 , KBNC23, KVNC23	**B1N021**	**TP-82**				**Drum**				
WINGROAD ウィングロード												
1500	90.10-96.05	WFY10	**SN585P**	**TP-13**				**Drum**				
	94.08-96.05	WFY10 (ABS)	**SN798P**	**C-213AP**				**Drum**				
	90.10-96.05	WFNY10	**SN798P**	**C-213AP**				**Drum**				
	96.05-99.05	WFY10, WFGY10, WFNY10	**B1N237**	**TP-81**				**Drum**				
	99.05-05.11	WFY11	**B1N037**	**TP-81**				**Drum**				
	05.11-08.09	Y12, NY12	**B1N234**	**C-675P**				**Drum**				
	08.09-	Y12, NY12	**B1N234**	**C-675P**				**Drum**				
1800	96.05-99.05	WHY10, WHNY10	**B1N237**	**TP-81**				**Drum**				
	99.05-05.11	WHY11, WHNY11	**B1N037**	**TP-81**				**Drum**				
	05.11-08.09	JY12	**B1N234**	**C-675P**				**Drum**				
	08.09-	JY12	**B1N234**	**C-675P**				**Drum**				
2000	96.05-99.05	WEY10	**B1N237**	**TP-81**				**Drum**				
	99.05-01.03	WPY11	**B1N019**	**TP-82**				**B2N022**	**TP-43**			
	01.03-01.10	WPY11	**B1N019**	**TP-82**				**B2N040**	**TP-43**			
	01.10-05.11	WRY11	**B1N037**	**TP-81**				**Drum**				

※1 SN853P-with Shim for retaining pin. SN783P-w/ o Shim for retaining pin.

cc	Year	Body Type	Front					Rear				
			Disc Pad	Seal Kit	Caliper		Piston	Disc Pad	Seal Kit	Caliper		Piston
					R	L				R	L	
X-TRAIL エクストレイル												
2000	00.10-07.08	T30, NT30, PNT30	**B1N062**	**A-450P**				**B2N064**	**A-654P**			
	07.08-10.03	T31, NT31	**B1N094**	**A-751P**				**B2N095**	**A-654AP**			
	10.03-	T31, NT31	**B1N094**	**A-751P**				**B2N095**	**A-654P**			
	13.12-	T32, NT32(2列シート)	**SN205**	**A-751P**				**SN509P**				
	13.12-	T32, NT32(2列シート) エマージェンシーブレーキ	**SN205**	**A-751P**								
	13.12-	T32, NT32(3列シート)	**SN204P**	**A-751P**				**SN509P**				
	13.12-	T32, NT32(3列シート) エマージェンシーブレーキ	**SN204P**	**A-751P**								
	15.04-	HT32, HNT32(ハイブリット)	**SN204P**	**A-751P**				**SN509P**				
	15.04-	HT32, HNT32(ハイブリット) エマージェンシーブレーキ	**SN204P**	**A-751P**								
	08.09-10.03	DNT31	**B1N094**	**A-751P**				**B2N095**	**A-654AP**			
	10.03-	DNT31	**B1N094**	**A-751P**				**B2N095**	**A-654P**			
2500	07.08-10.03	TNT31	**B1N094**	**A-751P**				**B2N095**	**A-654AP**			
	10.03-	TNT31	**B1N094**	**A-751P**				**B2N095**	**A-654P**			
	13.12-	T32, NT32	**★B1N248**									
180SX												
2000	91.01-96.08	RPS13, KRPS13	**B1N019**	**TP-82**				**B2N016**	**TP-43**			
	96.08-98.12	RPS13, KRPS13	**B1N019**	**TP-82**				**B2N016**	**TP-21A**			

NISSAN

★発売予定

SPECIFIC INDEX FOR MITSUBISHI

CAR NAME	PAGE
AIRTREK エアトレック	59
CANTER (FA5##) キャンター (FA5##)	59
CANTER (FB3, 5, 7##) キャンター (FB3, 5, 7##)	59
CANTER (FBA##) キャンター (FBA##)	59
CANTER (FC5##, FD3, 7##) キャンター (FC5##, FD3, 7##)	59
CANTER (FDA)	59
CANTER (FE3##) キャンター (FE3##)	60
CANTER (FE4##) キャンター (FE4##)	61
CANTER (FE5##) キャンター (FE5##)	61
CANTER (FE5#C, E) キャンター (FE5#C, E)	62
CANTER (FE6##) キャンター (FE6##)	62
CANTER (FE6#C, D, E) キャンター (FE6#C, D, E)	63
CANTER (FE7#B, C, D) キャンター (FE7#B, C, D)	63
CANTER (FE7#D, E) キャンター (FE7#D, E)	64
CANTER (FE8#B, C, D, E) キャンター (FE8#B, C, D, E)	64
CANTER (FE8#E) キャンター (FE8#E)	65
CANTER (FEA##) キャンター (FEA##)	65
CANTER (FEB, C, D##) キャンター (FEB, C, D##)	65
CANTER (FF6##) キャンター(FF6##)	65
CANTER (FF8#D, E) キャンター (FF8#D, E)	65
CANTER (FG3, 4, 5, 6##) キャンター (FG3, 4, 5, 6##)	65
CANTER (FG7, 8##) キャンター (FG7, 8##)	65
CANTER (FGA, B##) キャンター (FGA, B##)	65
CHALLENGER チャレンジャー	65
CHARIOT/ GRANDIS シャリオ/ グランディス	66
COLT コルト	66
COLT PLUS コルト プラス	66
DEBONAIR デボネア	66
DELICA/ STAR WAGON/ SPACE GEAR デリカ/ スターワゴン/ スペースギア	66
DELICA D:2 デリカ D：2	67
DELICA D:3 デリカ D：3	67
DELICA D:5 デリカ D：5	67
DELICA TRUCK デリカ トラック	67
DELICA VAN/ CARGO デリカ バン/ カーゴ	67
DIAMANTE ディアマンテ	67
DIAMANTE WAGON ディアマンテ ワゴン	68
DIGNITY ディグニティ	68
DION ディオン	68
ECLIPSE CROSS エクリプス/ クロス	68
ECLIPSE/ SPIDER エクリプス/ スパイダー	68

CAR NAME	PAGE
eK SPACE/ CUSTOM eKスペース/ スペースカスタム	68
eK WAGON/ SPORT/ CLASSY/ ACTIVE eK ワゴン/ スポーツ/ クラッシィ/ アクティブ	68
FTO	68
GALANT/ ASPIRE ギャラン/ アスパイア	69
GALANT/ ETERNA/ EMERAUDE ギャラン/ エテルナ/ エメロード	69
GALANT FORTIS ギャラン フォルティス	69
GALANT FORTIS SPORT BACK ギャラン フォルティス スポーツバック	69
GTO	69
I アイ	69
i-MiEV アイミーブ	69
LANCER ランサー	69
LANCER CARGO ランサー カーゴ	71
LANCER WAGON ランサー ワゴン	71
LEGNUM レグナム	71
LIBERO CARGO リベロ カーゴ	71
LIBERO WAGON リベロ ワゴン	71
MINICA/ MINICA TOPPO/ TOPPO BJ ミニカ/ ミニカ トッポ/ トッポBJ	72
MINICA/ MINICA TOPPO/ TOPPO BJ (Van) ミニカ/ ミニカ トッポ/ トッポBJ (バン)	72
MINICAB/ BRAVO (Van) ミニキャブ/ ブラボー (バン)	72
MINICAB (Panel Van) ミニキャブ (パネルバン)	72
MINICAB (Truck) ミニキャブ (トラック)	72
MINICAB/ MIEV ミニキャブ/ ミーブ	72
MIRAGE ミラージュ	72
MIRAGE DINGO ミラージュ ディンゴ	73
OUTLANDER アウトランダー	73
OUTLANDER PHEV アウトランダー PHEV	73
PAJERO パジェロ	73
PAJERO io パジェロ イオ	74
PAJERO Jr パジェロ ジュニア	74
PAJERO MINI パジェロ ミニ	74
ROSA ローザ	74
PROUDIA プラウディア	76
RVR	76
RVR/ SPORTS GEAR RVR/ スポーツギア RVR	76
SIGMA シグマ	76
STRADA ストラーダ	76
TOPPO BJ WIDE トッポBJワイド	76
TOWNBOX タウンボックス	76
TOWNBOX WIDE タウンボックス ワイド	76
TRITON トライトン	77

cc	Year	Body Type	Front					Rear				
			Disc Pad	Seal Kit	Caliper		Piston	Disc Pad	Seal Kit	Caliper		Piston
					R	L				R	L	
AIRTREK エアトレック												
2000	01.06-05.09	CU2W	**D1N048**	**A-650P**				**Drum**				
	02.05-05.09	CU2W (Turbo)	**D1N034**	**C-313P**				**D2N049**	**A-651P**			
2400	01.06-04.01	CU4W (Rear Drum)	**D1N048**	**A-650P**				**Drum**				
	03.01-04.01	CU4W (Rear Disc)	**D1N048**	**A-650P**				**D2N049**	**A-651P**			
	04.01-05.09	CU5W	**D1N048**	**A-650P**				**D2N049**	**A-651P**			
CANTER (FA5##) キャンター (FA5##)												
2000	97.06-99.04	FA500	**SN280E**	**SP280**				**Drum**				
	97.06-99.04	FA510, Super Low Floor	**D1N038**	**A-300P**				**Drum**				
	97.06-99.04	FA510, All Low Floor	**SN280E**	**SP280**				**Drum**				
	97.06-99.04	FA580, 590	**SN280E**	**SP280**				**Drum**				
2400	96.11-99.04	FA523	**SN280E**	**SP280**				**Drum**				
CANTER (FB3, 5, 7##) キャンター (FB3, 5, 7##)												
2000	99.03-	FB500	**SN280E**	**SP280**				**Drum**				
	99.03-02.06	FB510, All Low Floor	**SN280E**	**SP280**				**Drum**				
	99.03-02.06	FB510, Super Low Floor	**D1N038**	**A-300P**				**Drum**				
	03.07-	FB700, Super Low Floor, 全Low Floor	**D1N054**	**A-682P**				Disc Brake SN917E	**A-682P**			
2400	99.03-03.07	FB523	**SN280E**	**SP280**				**Drum**				
2700	85.09-89.09	FB300, Single Tire, Small Duble Tire	**D1N039**	**A-300P**				**Drum**				
	87.09-89.09	FB300, All small single Tire, All small Tire14inch, 15.5inch	**SN280P**	**SP280**				**Drum**				
2800	89.10-91.04	FB308, Single Tire, Small Double Tire	**D1N039**	**A-300P**				**Drum**				
	91.04-93.10	FB308, Single Tire, Small Double Tire	**D1N038**	**A-300P**				**Drum**				
	89.10-91.04	FB308, All small single Tire, All small Tire14inch, 15.5inch	**SN280P**	**SP280**				**Drum**				
	91.04-93.10	FB308, All small single Tire, All small Tire14inch, 15.5inch	**SN280E**	**SP280**				**Drum**				
	91.04-99.04	FB328, 501	**SN280E**	**SP280**				**Drum**				
	93.10-02.06	FB51A, 511, Super Low Floor, High Floor	**D1N038**	**A-300P**				**Drum**				
	93.10-02.06	FB51A, 511, All Low Floor	**SN280E**	**SP280**				**Drum**				
	96.01-02.06	FB51A, 511, High work car , YAMATO ver	**SN279E**	**SP279**				**Drum**				
	99.03-02.06	FB50A	**SN280E**	**SP280**				**Drum**				
	02.06-04.08	FB70A, Super Low Floor, All Low Floor, High Floor	**D1N054**	**A-682P**				Disc Brake SN917E	**A-682P**			
3000	04.07-09.04	FB70B	**D1N054**	**A-682P**				**SN917E**	**A-682P**			
	09.05-	FB70B	**★D1N082**	**A-682P**				**SN917E**	**A-682P**			
CANTER (FBA##) キャンター (FBA##)												
3000	10.11-	FBA00	**D1N081**					**D1N081**				
	10.11-	FBA20	**★D1N088**					**★D1N089**				
	10.11-	FBA30, 60										
CANTER (FC5##, FD3, 7##) キャンター (FC5##, FD3, 7##)												
2800	92.09-02.06	FD378, 50A, 501	**SN280E**	**SP280**				**Drum**				
	02.06-04.08	FD70A	**D1N054**	**A-682P**				**SN917E**	**A-682P**			
3000	04.12-09.04	FD70B, Single Cab	**D1N054**	**A-682P**				**SN917E**	**A-682P**			
	09.05-	FD70B, Single Cab Double Tire	**D1N054**	**A-682P**				**SN917E**	**A-682P**			
	09.05-	FD70B, Single Cab Double Tire	**★D1N082**					**D1N082**				
	04.12-	FD70B, Double Cab	**D1N054**	**A-682P**				**SN917E**	**A-682P**			
CANTER (FDA)												
3000	10.11-	FDA00(1.45t 1.5t)	**★D1N088**					**★D1N089**				
	10.11-	FDA20(2t)	**★D1N088**					**★D1N089**				
	11.06-	FDA40(1.85t 1.9t 2t)	**★D1N088**					**★D1N089**				

★発売予定

MITSUBISHI

cc	Year	Body Type	Front					Rear				
			Disc Pad	Seal Kit	Caliper		Piston	Disc Pad	Seal Kit	Caliper		Piston
					R	L				R	L	
CANTER (FDA)												
	14.01-	FDA50(4WD 2t 3t)	**SN193P**					**SN193P**				
	12.04-	FDA60(2t 2.6t 2.65t 2.8t 2.85t 2.9t 3t)	**SN193P**					**SN193P**				
CANTER (FE3##) キャンター (FE3##)												
3300	87.09-91.04	FE301, BFE, BFEW	**SN244P**	**SP244**				**Drum**				
	91.04-93.10	FE301, BFE, BFEW	**SN244E**	**SP244**				**Drum**				
	85.09-91.04	FE301, Without BFE, BFEW	**D1N039**	**A-300P**				**Drum**				
	91.04-93.10	FE301, Without BFE, BFEW	**D1N038**	**A-300P**				**Drum**				
	85.09-93.10	FE311 (Front Drum)						**Drum**				
	87.09-91.04	FE311 (Front Disc) Dump, Specially equipped car	**SN279**	**SP248**				**Drum**				
	91.04-93.10	FE311 (Front Disc) Dump, Specially equipped car	**SN279E**	**SP248**				**Drum**				
	85.09-91.04	FE311 (Front Disc) Cargo	**SN244P**	**SP244**				**Drum**				
	91.04-93.10	FE311 (Front Disc) Cargo	**SN244E**	**SP244**				**Drum**				
	89.09-91.04	FE321, Super Low Floor	**D1N039**	**A-300P**				**Drum**				
	91.04-93.10	FE321, Super Low Floor	**D1N038**	**A-300P**				**Drum**				
	89.09-91.04	FE321, All Low Floor	**SN244P**	**SP244**				**Drum**				
	91.04-93.10	FE321, All Low Floor	**SN244E**	**SP244**				**Drum**				
	85.09-91.04	FE331	**SN244P**	**SP244**				**Drum**				
	91.04-93.10	FE331	**SN244E**	**SP244**				**Drum**				
	85.09-89.09	FE334 (Front Drum)						**Drum**				
	85.09-89.09	FE334 (Front Disc)	**SN244P**	**SP244**				**Drum**				
3600	85.09-93.10	FE305 (Front Drum)						**Drum**				
	87.09-91.04	FE305 (Front Disc) BF AllLow Floor	**SN244P**	**SP244**				**Drum**				
	91.04-93.10	FE305 (Front Disc) BF AllLow Floor	**SN244E**	**SP244**				**Drum**				
	89.10-91.04	FE305 (Front Disc) BF AllLow Floor	**SN279**	**SP248**				**Drum**				
	91.04-93.10	FE305 (Front Disc) BF AllLow Floor	**SN279E**	**SP248**				**Drum**				
	85.09-91.04	FE305 (Front Disc)	**D1N039**	**A-300P**				**Drum**				
	91.04-93.10	FE305 (Front Disc)	**D1N038**	**A-300P**				**Drum**				
	85.09-93.10	FE315 (Front Drum)						**Drum**				
	87.09-91.04	FE315 (Front Disc) BD, BN	**SN279**	**SP248**				**Drum**				
	91.04-93.10	FE315 (Front Disc) BD, BN	**SN279E**	**SP248**				**Drum**				
	85.09-91.04	FE315 (Front Disc) BH	**SN244P**	**SP244**				**Drum**				
	91.04-93.10	FE315 (Front Disc) BH	**SN244E**	**SP244**				**Drum**				
	85.09-93.10	FE325 (Front Drum)						**Drum**				
	85.09-89.01	FE325 (Front Disc) BV, EV	**D1N039**	**A-300P**				**Drum**				
	85.09-91.04	FE325 (Front Disc) ET	**D1N039**	**A-300P**				**Drum**				
	91.04-93.10	FE325 (Front Disc) ET	**D1N038**	**A-300P**				**Drum**				
	87.09-91.04	FE325 (Front Disc) EF, BF	**SN244P**	**SP244**				**Drum**				
	91.04-93.10	FE325 (Front Disc) EF, BF	**SN244E**	**SP244**				**Drum**				
	85.09-93.10	FE335 (Front Drum) BV, EH, EV						**Drum**				
	85.09-87.08	FE335 (Front Disc) EHEW	**D1N039**	**A-300P**				**Drum**				
	87.09-91.04	FE335 (Front Disc) EHEW	**SN244P**	**SP244**				**Drum**				
	91.04-93.10	FE335 (Front Disc) EHEW	**SN244E**	**SP244**				**Drum**				
	87.05-91.04	FE335 (Front Disc) EH	**SN244P**	**SP244**				**Drum**				
	91.04-93.10	FE335 (Front Disc) EH	**SN244E**	**SP244**				**Drum**				
	87.09-91.04	FE335 (Front Disc) BV, EV, BG, BH	**SN279**	**SP248**				**Drum**				
	91.04-93.10	FE335 (Front Disc) BV, EV, BG, BH	**SN279E**	**SP248**				**Drum**				
	85.09-93.10	FE355						**Drum**				
4200	87.03-91.04	FE307, 317, 337	**SN279**	**SP248**				**Drum**				
	91.04-93.10	FE307, 317, 337	**SN279E**	**SP248**				**Drum**				

cc	Year	Body Type	Front					Rear				
			Disc Pad	Seal Kit	Caliper		Piston	Disc Pad	Seal Kit	Caliper		Piston
					R	L				R	L	
CANTER (FE4##) キャンター (FE4##)												
3300	85.09-89.09	FE431	**SN244P**	**SP244**				**Drum**				
	85.09-89.09	FE434 (Front Drum)						**Drum**				
	85.09-89.09	FE434 (Front Disc) CHES, CHESQ, EHES, EHESQ, EHESH, EHESHQ	**SN244P**	**SP244**				**Drum**				
	85.09-89.09	FE434 (Front Disc) EVHESQY, EVHESY, FHESH, FHESHQ	**SN279**	**SP248**				**Drum**				
	85.09-93.10	FE435 (Front Drum)						**Drum**				
	89.09-91.04	FE435 (Front Disc) CHE, CHEQ, EHE, EHEQ, EHEW, EHEK, EHEKQ, EHEM, EHEMQ	**SN244P**	**SP244**				**Drum**				
	91.04-93.09	FE435 (Front Disc) CHE, CHEQ, EHE, EHEQ, EHEW, EHEK, EHEKQ, EHEM, EHEMQ	**SN244E**	**SP244**				**Drum**				
	87.09-93.09	FE435 (Front Disc) EDHEY, EVHEKQY, FGE, FGEQ, FHE, EVGEM, EVGE, EVGEMQ, EVGEQ, EVHE, EVHEM, EVHEMQ, EVHEQ	SN279/(SN279E ※1)	**SP248**				**Drum**				
	87.06-93.10	FE437 (Front Drum)						**Drum**				
	87.06-91.04	FE437 (Front Disc)	**SN279**	**SP248**				**Drum**				
	91.04-93.10	FE437 (Front Disc)	**SN279E**	**SP248**				**Drum**				
	85.09-89.10	FE444						**Drum**				
3600	85.09-93.10	FE425 (Front Drum)						**Drum**				
	85.09-87.08	FE425 (Front Disc) ETEQ	**SN244P**	**SP244**				**Drum**				
	87.08-89.09	FE425 (Front Disc) ETEQ	**D1N039**	**A-300P**				**Drum**				
3000	85.09-91.04	FE425 (Front Disc) ETEQ	**SN244P**	**SP244**				**Drum**				
	91.04-93.10	FE425 (Front Disc) ETEQ	**SN244E**	**SP244**				**Drum**				
	85.09-93.10	FE445, 465						**Drum**				
3900	89.10-93.10	FE439 (Front Drum)						**Drum**				
	89.10-91.04	FE439 (Front Disc)	**SN279**	**SP248**				**Drum**				
	91.04-93.10	FE439 (Front Disc)	**SN279E**	**SP248**				**Drum**				
	89.10-93.10	FE449						**Drum**				
4200	85.09-93.10	FE447, 467						**Drum**				
CANTER (FE5##) キャンター (FE5##)												
2400	99.03-02.06	FE533 (Front Drum)						**Drum**				
	99.03-02.06	FE533 (Front Disc)	**D1N020**	**SP201**				**Drum**				
3600	93.10-99.04	FE516 (Front Drum)						**Drum**				
	93.10-99.04	FE516 (Front Disc) BC, BD4, BN, B1, B4	**SN279E**	**SP279**				**Drum**				
	93.10-99.04	FE516 (Front Disc) BT	**D1N038**	**A-300P**				**Drum**				
	93.10-99.04	FE536	**SN279E**	**SP279**				**Drum**				
	96.11-99.04	FE566 (Front Drum)						**Drum**				
	96.11-99.04	FE566 (Front Disc)	**D1N020**	**SP201**				**Drum**				
4200	93.10-99.04	FE507, 527	**SN279E**	**SP278**				**Drum**				
	93.10-99.04	FE517 (Front Drum)						**Drum**				
	93.10-99.04	FE517 (Front Disc)	**SN279E**	**SP279**				**Drum**				
	93.10-99.04	FE537 (Front Drum)						**Drum**				
	96.11-99.04	FE537 (Front Disc) BD	**D1N020**	**SP201**				**Drum**				
	93.10-99.04	FE537 (Front Disc)	**SN279E**	**SP279**				**Drum**				
	96.11-99.04	FE567 (Front Drum)						**Drum**				
	96.11-99.04	FE567 (Front Disc) EV1, 4	**SN279E**	**SP279**				**Drum**				
	96.11-99.04	FE567 (Front Disc) B1, 3, 4, 6	**D1N020**	**SP201**				**Drum**				
4600	93.10-99.04	FE508, 528	**SN279E**	**SP278**				**Drum**				
	93.10-99.04	FE518	**SN279E**	**SP279**				**Drum**				

※1 Option

MITSUBISHI

cc	Year	Body Type	Front					Rear				
			Disc Pad	Seal Kit	Caliper		Piston	Disc Pad	Seal Kit	Caliper		Piston
					R	L				R	L	
CANTER (FE5##) キャンター (FE5##)												
	93.10-99.04	FE538 (Front Drum)						**Drum**				
	96.11-99.04	FE538 (Front Disc) BD, E3, 3Q, 6, 6Q	**D1N020**	**SP201**				**Drum**				
	93.10-99.04	FE538 (Front Disc) BD	**SN279E**	**SP279**				**Drum**				
	95.03-99.04	FE548						**Drum**				
	96.11-99.04	FE568 (Front Drum)						**Drum**				
	96.11-99.04	FE568 (Front Disc) EV1, 4	**SN279E**	**SP279**				**Drum**				
	96.11-99.04	FE568 (Front Disc) C1M69, 169	**SN279E**	**SP278**				**Drum**				
	96.11-99.04	FE568 (Front Disc) B1, 3, 4, 6, C1	**D1N020**	**SP201**				**Drum**				
5200	97.10-99.04	FE512	**SN279E**	**SP279**				**Drum**				
	97.10-99.04	FE532, Van	**SN279E**	**SP279**				**Drum**				
	97.10-99.04	FE532, Dump	**D1N020**	**SP201**				**Drum**				
	97.10-99.04	FE542						**Drum**				
	97.10-99.04	FE562 (Front Disc) EV1, 4	**SN279E**	**SP279**				**Drum**				
	97.10-99.04	FE562 (Front Disc) B1, 3, 4, 6, C1, 3, 4	**D1N020**	**SP201**				**Drum**				
CANTER (FE5#C, E) キャンター (FE5#C, E)												
4200	99.03-02.06	FE50C, 52C	**SN279E**	**SP278**				**Drum**				
	99.03-02.06	FE51C	**SN279E**	**SP279**				**Drum**				
	99.03-02.06	FE53C (Front Drum)						**Drum**				
	99.03-02.06	FE53C (Front Disc) B1 (Van) , E4, EV1, 4	**SN279E**	**SP279**				**Drum**				
	99.03-02.06	FE53C (Front Disc) B1, B4, EV6	**D1N020**	**SP201**				**Drum**				
5200	99.03-02.06	FE50E, 52E	**SN279E**	**SP278**				**Drum**				
	99.03-02.06	FE51E, BD1, 3, 4, 6	**SN279E**	**SP279**				**Drum**				
	00.06-02.06	FE51E, BD1, 4	**SN279E**	**SP279**				**Drum**				
	00.06-02.06	FE51E, BD3, 6	**D1N020**	**SP201**				**Drum**				
	99.03-02.06	FE53E (Front Drum)						**Drum**				
	99.03-02.06	FE53E (Front Disc) C1M168, 169, 369	**SN279E**	**SP278**				**Drum**				
	99.03-02.06	FE53E (Front Disc) EV1, C1	**SN279E**	**SP279**				**Drum**				
	99.03-02.06	FE53E (Front Disc) B1, 3, 4, 6, C6, BD, BX, EV6	**D1N020**	**SP201**				**Drum**				
	99.03-02.06	FE59E (Front Drum)						**Drum**				
	99.03-02.06	FE59E (Front Disc)	**SN279E**	**SP279**				**Drum**				
CANTER (FE6##) キャンター (FE6##)												
3600	93.10-99.04	FE636	**SN279E**	**SP279**				**Drum**				
3900	93.10-99.04	FE639 (Front Drum)						**Drum**				
	93.10-99.04	FE639 (Front Disc) Rear W Tire1.5t, 2t, All Low FloorW Tire1.5t, 2t, 4t	**SN279E**	**SP279**				**Drum**				
	96.11-99.04	FE639 (Front Disc) All Low FloorW Tire3t, 3.5t, Rear W Tire3t, 3.5t, 4t	**D1N020**	**SP201**				**Drum**				
	97.10-99.04	FE649						**Drum**				
	96.11-99.04	FE669 (Front Disc) , All Low FloorW Tire1.5t, 2, 4tOverRear W Tire1.5t, 2t	**SN279E**	**SP279**				**Drum**				
	96.11-99.04	FE669 (Front Disc) All Low FloorW Tire3t, 3.5t, Rear W Tire3t, 3.5t, 4t	**D1N020**	**SP201**				**Drum**				
4200	93.10-99.04	FE637 (Front Drum)						**Drum**				
	93.10-99.04	FE637 (Front Disc) Over Low Floor1.5t, 2t, Rear W Tire1.5t, 2t, All Low FloorW Tire1.5t, 2t, 4t	**SN279E**	**SP279**				**Drum**				
	96.10-99.04	FE667, EV1, 1A, 4, 4A, 4MA, 488	**SN279E**	**SP279**				**Drum**				
	96.10-99.04	FE667, EV688	**D1N020**	**SP201**				**Drum**				
4600	93.10-99.04	FE638 (Front Drum)						**Drum**				
	96.11-99.04	FE638 (Front Disc) C6, E3, 6	**D1N020**	**SP201**				Disc Brake SN295E	**SP201**			

cc	Year	Body Type	Front					Rear				
			Disc Pad	Seal Kit	Caliper		Piston	Disc Pad	Seal Kit	Caliper		Piston
					R	L				R	L	
CANTER (FE6##) キャンター (FE6##)												
	96.11-99.04	FE638 (Front Disc)	**SN279E**	**SP279**				**Drum**				
	97.10-99.04	FE648 (Front Drum)						**Drum**				
	97.10-99.04	FE648 (Front Disc)	**D1N020**	**SP201**				**SN295E**	**SP201**			
	95.04-99.04	FE658, 659						**Drum**				
	96.11-99.04	FE668, EV1, 4	**SN279E**	**SP279**				**Drum**				
	96.11-99.04	FE668, EV3, 6	**D1N020**	**SP201**				**Drum**				
5200	97.10-99.04	FE632, 642, 652 (Front Drum)						**Drum**				
	97.10-99.04	FE632, 662 (Front Disc) C1, G1, 4, E1, EV1.4	**SN279E**	**SP279**				**Drum**				
	97.10-99.04	FE632, 662 (Front Disc) C6, G3, 6, E3, EV3, 6	**D1N020**	**SP201**				**Drum**				
CANTER (FE6#C, D, E) キャンター (FE6#C, D, E)												
4200	99.03-02.06	FE63C (Front Drum)						**Drum**				
	99.03-02.06	FE63C (Front Disc) EV3, 6	**D1N020**	**SP201**				**Drum**				
	99.03-02.06	FE63C (Front Disc) ET, EV1, 4, E1, 4	**SN279E**	**SP279**				**Drum**				
4900	99.03-02.06	FE63D (Front Drum)						**Drum**				
	99.03-02.06	FE63D (Front Disc) EV1, 4, G1, 4	**SN279E**	**SP279**				**Drum**				
	99.03-02.06	FE63D (Front Disc) EV3, 6, E3, 6, G3, 6	**D1N020**	**SP201**				Disc Brake SN295E	**SP201**			
5200	99.03-02.06	FE62E	**D1N020**	**SP201**				Disc Brake SN295E	**SP201**			
	99.03-02.06	FE63E, 69E (Front Drum)						**Drum**				
	99.03-02.06	FE63E, 69E (Front Disc) C4, EV1, 4, EV11	**SN279E**	**SP279**				**Drum**				
	99.03-02.06	FE63E (Front Disc) C6, E6, G6, EV3, 6, EV31	**D1N020**	**SP201**				Disc Brake SN295E	**SP201**			
CANTER (FE7#B, C, D) キャンター (FE7#B, C, D)												
3000	04.04-09.04	FE70B	**D1N005**	**SP117**			D9N010	**Drum**				
	09.05-	FE70B, BS1, B1, 4, 8	**D1N083**	**SP117**			D9N010	**Drum**				
	10.01-	FE70B, B3A6, B36	**D1N084**	**SP118**				**Drum**				
	04.04-09.04	FE72B	**D1N005**	**SP117**				**Drum**				
	09.05-	FE72B, CS1, 4, C1, 4, ES1, 4, E1, 4	**D1N083**	**SP117**				**Drum**				
	10.01-	FE72B, E3A6, E36	**D1N084**	**SP118**				**Drum**				
	04.04-09.04	FE71B	**D1N005**	**SP117**				Disc Brake SN117E	**SP117**			
	09.05-	FE71B	**D1N083**	**SP117**				**Drum**				
	04.04-06.07	FE73B, EV1, 4	**D1N005**	**SP117**				**Drum**				
	04.04-09.04	FE73B, B1, 4	**D1N006**	**SP118**				**SN118E**	**SP118**			
	09.05-	FE73B, B3, 4, 6, C3	**D1N084**	**SP118**				**Drum**				
	09.04-	FE73B (HV) B4UKL6, B6UKL6	**D1N006**	**SP118**				**Drum**				
	06.05-09.04	FE74B (Single cab) BSV1, 4, BV1	**D1N005**	**SP117**				**Drum**				
	09.05-	FE74B (Single cab) BSV1, 4, BV1, 4, ESV1, 4, EV1, 4	**D1N083**	**SP117**				**Drum**				
	10.01-	FE74B (Single cab) EV3A6, EV36, EV6A6, EV66	**D1N084**	**SP118**				**Drum**				
	06.05-	FE74B (HV) BSV1, BV1, ESV1, ES1, EV1	**D1N005**	**SP117**				**Drum**				
	06.05-	FE74B (HV) BV3, EV3, E3, 6	**D1N006**	**SP118**				**Drum**				
4200	02.06-04.08	FE70C, 71C, 72C	**D1N005**	**SP117**			D9N010	**Drum**				
	02.06-04.08	FE73C (Front Drum)						**Drum**				
	02.06-04.08	FE73C (Front Disc) EV1, 4	**D1N005**	**SP117**				**Drum**				
	02.06-04.08	FE73C (Front Disc) B1, 4, EV6(ABS+EZGO)	**D1N006**	**SP118**				**Drum**				
4900	04.02-09.04	FE70D, B0, 1, 4, 8	**D1N005**	**SP117**			D9N010	**Drum**				
	09.05-	FE70D, B0, 1, 4, 8	**D1N083**	**SP117**			D9N010	**Drum**				
	04.02-09.04	FE70D, B3, 6	**D1N006**	**SP118**				**Drum**				
	09.05-	FE70D, B3, 6	**D1N084**	**SP118**				**Drum**				
	04.02-09.04	FE71D, B1, BD1, 4, BSD1, 4	**D1N005**	**SP117**				Disc Brake SN117E	**SP117**			
	09.05-	FE71D, B1, BD1, 4, BSD1, 4	**D1N083**	**SP117**				**Drum**				

MITSUBISHI

cc	Year	Body Type	Front					Rear				
			Disc Pad	Seal Kit	Caliper		Piston	Disc Pad	Seal Kit	Caliper		Piston
					R	L				R	L	
CANTER (FE7#B, C, D) キャンター (FE7#B, C, D)												
	04.02-09.04	FE71D, BD3, 6	**D1N006**	**SP118**				**Drum**				
	09.05-	FE71D, BD3, 6	**D1N084**	**SP118**				**Drum**				
	04.02-09.04	FE72D, B1, 4, C1, 4, E1, 4, EV1, 4	**D1N005**	**SP117**				**Drum**				
	09.05-	FE72D, B1, 4, C1, 4, E1, 4, EV1, 4	**D1N083**	**SP117**				**Drum**				
	04.02-09.04	FE72D, E3, 6, EV3, 6	**D1N006**	**SP118**				**Drum**				
	09.05-	FE72D, E3, 6, EV3, 6	**D1N084**	**SP118**				**Drum**				
	04.02-	FE73D (Front Drum)						**Drum**				
	04.02-09.04	FE73D (Front Disc)	**D1N006**	**SP118**				Disc Brake SN118E	**SP118**			
	09.05-	FE73D (Front Disc)	**D1N084**	**SP118**				**Drum**				
CANTER (FE7#D, E) キャンター (FE7#D, E)												
4900	07.01-09.04	FE74D, BV1, 4, EV1, 4	**D1N005**	**SP117**				**Drum**				
	09.05-	FE74D, BV1, 4, EV1, 4	**D1N083**	**SP117**				**Drum**				
	07.01-09.04	FE74D, BV3, 6, EV3, 6	**D1N006**	**SP118**				**Drum**				
	09.05-	FE74D, BV3, 6, EV3, 6	**D1N084**	**SP118**				**Drum**				
	04.02-	FE78D	**D1N005**	**SP117**				**Drum**				
5200	02.06-04.08	FE70E, B0, 1, 4, 8, 12, 13, BD	**D1N005**	**SP117**			D9N010	Disc Brake SN117E	**SP117**			D9N010
	02.06-04.08	FE70E, B3, 6	**D1N006**	**SP118**				Disc Brake SN118E	**SP118**			
	02.06-04.08	FE71E, BD1, 4	**D1N005**	**SP117**				Disc Brake SN117E	**SP117**			
	02.06-04.08	FE71E, BD3, 6	**D1N006**	**SP118**				Disc Brake SN118E	**SP118**			
	02.06-04.08	FE72E, B1, 4, C1, 4, E1, 4, EV1, 4	**D1N005**	**SP117**				Disc Brake SN117E	**SP117**			
	02.06-04.08	FE72E, E3, 6, EV3, 6	**D1N006**	**SP118**				Disc Brake SN118E	**SP118**			
	02.06-04.08	FE73E (Front Drum)						**Drum**				
	02.06-04.08	FE73E (Front Disc)	**D1N006**	**SP118**				**Drum**				
	02.06-04.08	FE78E	**D1N005**	**SP117**				**Drum**				
CANTER (FE8#B, C, D, E) キャンター (FE8#B, C, D, E)												
3000	06.08-09.04	FE82B, CS1, 4, C1, 4, ES1	**D1N005**	**SP117**				**Drum**				
	09.05-	FE82B, CS1, 4, ES1, 4, E1, 4, G1, 4	**D1N083**	**SP117**				**Drum**				
	10.01-	FE82B, E3A6, E36, E6A6, E66	**D1N084**	**SP118**				**Drum**				
	07.02-09.03	FE84B (HV) E3VL2	**D1N005**	**SP117**				**Drum**				
	09.04-	FE84B (HV) EV1, E1	**D1N005**	**SP117**				**Drum**				
	09.04-	FE84B (HV) EV3, E3, GV1, 3	**D1N006**	**SP118**				**Drum**				
	09.04-	FE84B EV1A6, EV16, EV4A6, EV46		**SP117**				**Drum**				
4200	02.06-04.08	FE82C	**D1N005**	**SP117**				**Drum**				
	02.06-04.08	FE83C, EV1, 4	**D1N005**	**SP117**				**Drum**				
	02.06-04.08	FE83C, EV3, 6	**D1N006**	**SP118**				**Drum**				
4900	02.05-09.04	FE82D, C1, 4, EV1, 4, E0, 1, 4, G1, 4	**D1N005**	**SP117**				Disc Brake SN117E	**SP117**			
	09.05-	FE82D, E1, 4, G1, 4	**D1N083**	**SP117**				**Drum**				
	02.05-09.04	FE82D, EV3, 6, EX3, 6, E3, 6, G3, 6	**D1N006**	**SP118**				Disc Brake SN118E	**SP118**			
	09.05-	FE82D, E3, 6, G3, 6	**D1N084**	**SP118**				**Drum**				
	02.05-	FE83D (Front Drum)						**Drum**				
	02.05-	FE83D (Front Disc)	**D1N006**	**SP118**				Disc Brake SN118E	**SP118**			
	06.12-09.04	FE84D, EV1, 4	**D1N005**	**SP117**				Disc Brake SN117E	**SP117**			
	09.05-	FE84D, EV1, 4	**D1N083**	**SP117**				**Drum**				
	06.12-09.04	FE84D, EV3, 6	**D1N006**	**SP118**				Disc Brake SN118E	**SP118**			
	09.05-	FE84D, EV3, 6	**D1N084**	**SP118**				**Drum**				
	04.04-	FE88D, EV1	**D1N005**	**SP117**				**Drum**				
	04.04-	FE88D, EV3	**D1N006**	**SP118**				**Drum**				
5200	02.06-04.08	FE82E, C4, EV1, 4, E1, 4, G1, 4	**D1N005**	**SP117**				Disc Brake SN117E	**SP117**			
	02.06-04.08	FE82E, E3, 6, EV3, 6, EX3, 6, G3, 6	**D1N006**	**SP118**				Disc Brake SN118E	**SP118**			

cc	Year	Body Type	Front					Rear				
			Disc Pad	Seal Kit	Caliper		Piston	Disc Pad	Seal Kit	Caliper		Piston
					R	L				R	L	
CANTER (FE8#E) キャンター (FE8#E)												
5200	02.06-04.08	FE83E (Front Drum)						**Drum**				
	02.06-04.08	FE83E (Front Disc)	**D1N006**	**SP118**				**Drum**				
	02.06-04.08	FE88E, EV1	**D1N005**	**SP117**				**Drum**				
	02.06-04.08	FE88E, EV3	**D1N006**	**SP118**				**Drum**				
CANTER (FEA##) キャンター (FEA##)												
3000	10.11-	FEA13, 20, 50, 53, 70, 73, 80	**★D1N088**	**SP459**				**★D1N089**				
CANTER (FEB, C, D##) キャンター (FEB, C, D##)												
3000	10.11-	FEB20, 50, 73, 80, 90, FEC90, FED00, 20, 40	**★D1N088**	**SP459**				**★D1N089**				
CANTER (FF6##) キャンター(FF6##)												
3900	96.10-99.05	FF659						**Drum**				
4600	96.10-99.05	FF658						**Drum**				
4900	99.03-02.06	FF63D						**Drum**				
5200	99.03-02.06	FF63E						**Drum**				
CANTER (FF8#D, E) キャンター (FF8#D, E)												
4900	02.06-	FF83D						**Drum**				
5100	02.06-04.08	FF83E						**Drum**				
CANTER (FG3, 4, 5, 6##) キャンター (FG3, 4, 5, 6##)												
3600	85.12-93.10	FG325, 335, 435, 437						**Drum**				
4200	89.10-95.03	FG327, 337, 537						**Drum**				
	96.10-99.04	FG507	**SN279E**	**SP278**				**Drum**				
4600	96.10-99.04	FG508	**SN279E**	**SP278**				**Drum**				
	93.10-99.04	FG538, 638						**Drum**				
5200	99.03-02.06	FG50E, 52E	**SN279E**	**SP278**				**Drum**				
	99.03-02.06	FG53E, 63E						**Drum**				
	99.03-02.06	FG62E, 68E	**D1N020**	**SP201**				**Drum**				
CANTER (FG7, 8##) キャンター (FG7, 8##)												
4900	04.02-09.04	FG70D, B1, BD1, BS1	**D1N005**	**SP117**				**Drum**				
	09.05-	FG70D, B1, BD1, BS1	**D1N083**	**SP117**				**Drum**				
	04.02-09.04	FG70D, B3, BD3	**D1N006**	**SP118**				**Drum**				
	09.05-	FG70D, B3, BD3	**D1N084**	**SP118**				**Drum**				
	04.02-	FG72D, C1, E1	**D1N005**	**SP117**				**Drum**				
	04.02-	FG72D, B3, C3	**D1N006**	**SP118**				Disc Brake SN118E	**SP118**			
	04.02-	FG73D, 83D	**D1N084**					**Drum**				
	07.06-09.04	FG74D, C1, E1	**D1N005**	**SP117**				**Drum**				
	09.05-	FG74D, C1, E1	**D1N083**	**SP117**				**Drum**				
	07.06-09.04	FG74D, C3, D3	**D1N006**	**SP118**				Disc Brake SN118E	**SP118**			
	09.05-	FG74D, C3, D3	**D1N084**	**SP118**				**Drum**				
	04.02-	FG82D, 84D, 88D	**D1N005**	**SP117**				**Drum**				
5200	02.06-04.08	FG70E, BD1, B1	**D1N005**	**SP117**				**Drum**				
	02.06-04.08	FG70E, BD3, B3	**D1N006**	**SP118**				**Drum**				
	02.06-04.08	FG72E, C1, E1	**D1N005**	**SP117**				**Drum**				
	02.06-04.08	FG72E, B3, C3	**D1N006**	**SP118**				**Drum**				
	02.06-04.08	FG73E, 83E						**Drum**				
	02.06-04.08	FG82E, 88E	**D1N005**	**SP117**				**Drum**				
CANTER (FGA, B##) キャンター (FGA, B##)												
3000	10.11-	FGA20, FGB70	**★D1N088**					**★D1N089**				
CHALLENGER チャレンジャー												
2500	96.05-97.07	K94W, 94WG	**D1N034**	**C-313P**				**D2N022**	**SP298**	D5R016	D5L016	D9N010
2800	96.05-99.05	K97WG	**D1N034**	**C-313P**				**D2N022**	**SP298**	D5R016	D5L016	D9N010

★発売予定

MITSUBISHI

cc	Year	Body Type	Front					Rear				
			Disc Pad	Seal Kit	Caliper		Piston	Disc Pad	Seal Kit	Caliper		Piston
					R	L				R	L	
CHALLENGER チャレンジャー												
3000	96.05-98.07	K96W	**D1N034**	**C-313P**				**D2N022**	**SP298**	D5R016	D5L016	D9N010
3500	97.08-01.08	K99W	**D1N034**	**C-313P**				**D2N022**	**SP298**	D5R016	D5L016	D9N010
CHARIOT/GRANDIS シャリオ/グランディス												
2000	91.05-97.10	N33W, 38W, 48W	**D1N035**	**C-312P ※1**				**Drum**				
	91.05-97.10	N33W, 38W, 48W (ABS)	**D1N035**	**C-312P ※1**				**D2N032**	**C-224P**			
	91.05-95.03	N43W	**D1N035**	**C-312P**				**Drum**				
	91.05-95.03	N43W (ABS)	**D1N035**	**C-312P**				**D2N032**	**C-224P**			
	95.04-97.10	N43W	**D1N035**	**C-312P**				**Drum**				
	95.04-97.10	N43W (Turbo)	**D1N034**	**C-313P**				**D2N032**	**C-224P**			
2400	93.05-97.10	N34W, 44W	**D1N035**	**C-312P ※1**				**D2N032**	**C-224P**			
	97.08-00.03	N84W, 94W	**D1N045**	**A-487P**				**Drum**				
	00.04-03.05	N84W, 94W	**D1N048**	**A-650P**				**Drum**				
	03.05-09.03	NA4W	**D1N048**	**A-650P**				**D2N097**	**A-651P**			
3000	99.10-02.06	N86W, 96W	**D1N045**	**A-487P**				**D2N036**	**A-348P**			
COLT コルト												
1300	02.10-04.10	Z25A, 26A	**D1N050**	**A-608P**				**Drum**				
	04.09-	Z21A, 22A	**D1N050**	**A-608P**				**Drum**				
1500	02.11-04.10	Z28A	**D1N050**	**A-608P**				**Drum**				
	04.09-	Z23A, 24A	**D1N050**	**A-608P**				**Drum**				
	02.10-04.09	Z27A	**D1N050**	**A-608P**				**Drum**				
	04.09-	Z27A	**SN127**	**SP114**			E9N006	**D2N040**	**A-128P+ C-128LP**			
	06.05-	Z27AG						**D2N074**				
COLT PLUS コルト プラス												
1300	10.04-	Z21W, 22W	**D1N050**	**A-608P**				**Drum**				
1500	04.08-	Z23W (size up brake)	**SN127**	**SP114**			E9N006	**D2N040**	**A-128P+ C-128LP**			
	04.08-	Z23W	**D1N050**	**A-608P**				**Drum**				
	04.08-	Z24W	**D1N050**	**A-608P**				**Drum**				
	04.08-	Z27W, 27WG	**SN127**	**SP114**			E9N006	**D2N040**	**A-128P+ C-128LP**			
DEBONAIR デボネア												
2000	89.09-92.08	S11A (Rear Drum)	**D1N035**	**A-312P**				**Drum**				
	89.09-92.08	S11A (Rear Disc)	**D1N035**	**A-312P**				**D2N032**	**A-224P**			
3000	89.09-92.08	S12A (SOHC)	**D1N035**	**A-312P**				**D2N032**	**A-224P**			
	89.09-92.08	S12A (DOHC)	**D1N034**	**A-313P**				**D2N032**	**A-224P**			
	92.08-00.02	S22A (LPG含)	**D1N034**	**C-313P**				**D2N036**	**A-348P**			
3500	92.08-00.02	S26A, 27A	**D1N034**	**C-313P**				**D2N036**	**A-348P**			
DELICA/STAR WAGON/SPACE GEAR デリカ/スターワゴン/スペースギア												
2000	86.04-94.05	P03W	**D1N033**	**A-233P**				**Drum**				
2400	89.08-93.06	P04W	**D1N033**	**A-233P**				**Drum**				
	89.08-94.05	P24W	**D1N033**	**A-223P**				**Drum**				
	94.03-97.09	PD4W	**D1N034**	**C-313P**				**D2N037**	**A-348P**			
	94.03-02.07	PA4W, PB4W, PC4W	**D1N042**	**C-313P**				**Drum**				
2500	86.04-99.08	P05W, P15W, P25W	**D1N033**	**A-233P**				**Drum**				
	86.04-99.08	P35W	**D1N033**	**A-223P**				**Drum**				
	94.03-99.04	PA5W, PB5W, PC5W	**D1N042**	**C-313P**				**Drum**				
2800	94.03-04.10	PD8W, PE8W, PF8W	**D1N034**	**C-313P**				**D2N037**	**A-348P**			
3000	94.03-99.04	PB6W	**D1N042**	**C-313P**				**Drum**				

※1 Crystal

cc	Year	Body Type	Front					Rear				
			Disc Pad	Seal Kit	Caliper		Piston	Disc Pad	Seal Kit	Caliper		Piston
					R	L				R	L	
DELICA/ STAR WAGON/ SPACE GEAR デリカ/ スターワゴン/ スペースギア												
	94.03-06.12	PD6W, PF6W	**D1N034**	**C-313P**				**D2N037**	**A-348P**			
DELICA D:2 デリカ D：2												
1200	11.03-	MB15S	**H1N025**	**TP-81**				**Drum**				
	17.02-	MB36S, MB46S	**SN949P**									
DELICA D:3 デリカ D：3												
1600	11.10-	BM20	**SN959P**	**TP-114**				**Drum**				
DELICA D:5 デリカ D：5												
2000	10.01-12.06	CV2W, 4W	**D1N048**	**C-650P**				**D2N097**	**A-651P**			
	12.07-	CV2W	**SN889**	**C-650P**				**★E2N086**	**A-786P**			
2300	13.01-	CV1W	**D1N048**	**C-650P**				**★E2N086**	**A-786P**			
2400	07.01-	CV5W	**D1N048**	**C-650P**				**D2N097**	**A-651P**			
DELICA TRUCK デリカ トラック												
1400	86.04-94.05	L036P						**Drum**				
1600	86.04-94.05	L063P	**SN732**	**A-97P**				**Drum**				
	94.03-99.06	P02T	**D1N042**	**A-312P**				**Drum**				
1800	99.06-	SK82T, SK82L	**SN281P**	**SP237**				**Drum**				
	10.09-	SKP2TM, SKP2TL	**SN281P**	**SP237**				**Drum**				
2000	94.03-99.06	P13T	**D1N042**	**A-312P**				**Drum**				
	94.03-99.06	P13T(ABS)	**D1N042**	**C-313P**				**Drum**				
	03.12-	SKF2L, SKF2T	**SN281P**	**SP237**				**Drum**				
2200	99.06-03.12	SK22L, SK22T	**SN281P**	**SP237**				**Drum**				
2500	86.04-94.05	L039P, L069P	**SN732**	**A-97P**				**Drum**				
	88.08-94.05	L039G	**D1N033**	**A-233P**				**Drum**				
	94.03-99.06	P05T	**D1N042**	**A-312P**				**Drum**				
	94.03-99.06	P15T	**D1N042**	**A-312P**				**Drum**				
	94.03-99.06	P15T(ABS)	**D1N042**	**C-313P**				**Drum**				
	94.03-99.06	P25T	**D1N042**	**A-312P**				**Drum**				
	94.03-99.06	P25T (ABS)	**D1N034**	**C-313P**				**Drum**				
DELICA VAN/ CARGO デリカ バン/ カーゴ												
1400	86.04-93.04	P01V						**Drum**				
1600	88.08-99.08	P02V, P06V, P12V	**D1N033**	**A-233P**				**Drum**				
	11.10-	BVM20	**SN959P**	**TP-114**				**Drum**				
1800	99.06-	SK82V, SK82M	**SN281P**	**SP237**				**Drum**				
	10.09-	SKP2VM, SKP2MM	**SN281P**	**SP237**				**Drum**				
2000	88.08-99.08	P03V, P07V, P13V, P17V, P23V, P27V	**D1N033**	**A-233P**				**Drum**				
	94.03-99.04	PA3V	**D1N042**	**A-312P**				**Drum**				
	94.03-99.04	PA3V(ABS)	**D1N042**	**C-313P**				**Drum**				
	99.09-	SKE6V, SKF6V, SKF6M	**E1N021**	**SP281**				**Drum**				
	03.02-	SKF2M, SKF2V	**SN281P**	**SP237**				**Drum**				
2200	99.06-03.12	SK22M, SK22V	**SN281P**	**SP237**				**Drum**				
2500	86.04-94.03	P05V, P15V, P25V, P45V	**D1N033**	**A-233P**				**Drum**				
	94.03-99.04	PA5V	**D1N042**	**A-312P**				**Drum**				
	94.03-99.04	PA5V(ASB)	**D1N042**	**C-313P**				**Drum**				
	94.03-99.04	PB5V	**D1N042**	**C-313P**				**Drum**				
	94.03-99.04	PD5V	**D1N042**	**A-312P**				**Drum**				
	94.03-99.04	PD5V (ABS)	**D1N034**	**C-313P**				**Drum**				
	99.06-03.12	SK56V, SK56M	**E1N021**	**SP281**				**Drum**				
DIAMANTE ディアマンテ												
2000	90.02-95.01	F11A, 12A	**D1N035**	**A-312P**				**D2N032**	**C-224P**			

★発売予定

MITSUBISHI

cc	Year	Body Type	Front					Rear				
			Disc Pad	Seal Kit	Caliper		Piston	Disc Pad	Seal Kit	Caliper		Piston
					R	L				R	L	
DIAMANTE ディアマンテ												
2500	90.05-95.01	F13A (25E, 25 Espada)	**D1N035**	**A-312P**				**D2N032**	**C-224P**			
	92.10-93.09	F13A (25V-S)	**D1N034**	**A-313P**				**D2N032**	**A-224P**			
	93.10-95.01	F13A (25V-S)	**D1N035**	**A-313P**				**D2N032**	**C-224P**			
	93.11-95.01	F13A (25V, 25V-SE)	**D1N034**	**A-313P**				**D2N032**	**A-224P**			
	90.05-93.11	F15A	**D1N034**	**A-313P**				**D2N032**	**A-224P**			
	90.05-95.01	F25A	**D1N034**	**A-313P**				**D2N036**	**A-348P**			
	95.01-02.09	F31A	**D1N034**	**C-313P**				**D2N032**	**A-348P**			
	95.01-02.09	F41A	**D1N034**	**C-313P**				**D2N036**	**A-348P**			
	02.10-05.12	F34A	**D1N034**	**C-313P**				**D2N032**	**A-348P**			
3000	90.05-95.01	F17A	**D1N034**	**A-313P**				**D2N032**	**A-224P**			
	90.05-95.01	F27A	**D1N034**	**A-313P**				**D2N036**	**A-348P**			
	95.01-02.09	F36A	**D1N034**	**C-313P**				**D2N032**	**A-348P**			
	95.01-02.09	F46A, 47A	**D1N034**	**C-313P**				**D2N036**	**A-348P**			
DIAMANTE WAGON ディアマンテ ワゴン												
3000	92.12-96.10	F07W (ABS)	**D1N034**	**C-313P**				**D2N036**	**A-348P**			
	94.08-96.10	F07W										
	97.10-98.12	F36W										
DIGNITY ディグニティ												
3500	12.07-	BHGY51										
DION ディオン												
1800	02.05-05.12	CR5W	**D1N048**	**A-650P**				**Drum**				
2000	00.01-05.12	CR6W, 9W	**D1N035**	**A-312P**				**Drum**				
ECLIPSE CROSS エクリプス/クロス												
1500	18.02-	GK1W, GK9W										
ECLIPSE/SPIDER エクリプス/スパイダー												
2000	89.09-94.04	D22A	**D1N035**	**C-312P**					**A-128P+ C-128LP ※1**			
	89.09-90.09	D27A	**D1N035**	**A-312P**					**A-314P**			
	90.10-92.06	D27A	**D1N035**	**A-312P**				**D2N028**	**A-314P**			
	92.07-95.05	D27A	**D1N034**	**A-313P**				**D2N028**	**A-314P**			
	95.02-99.05	D32A, 38A	**D1N035**	**A-312P**				**D2N032**				
3000	04.10-06.03	D53A	**D1N048**					**D2N032**				
eK SPACE/CUSTOM eKスペース/スペースカスタム												
660	14.01-	B11A		**A-607P**				**Drum**				
	14.01-	B11A(Turbo)						**Drum**				
eK WAGON/SPORT/ CLASSY/ACTIVE eK ワゴン/スポーツ/ クラッシィ/アクティブ												
660	01.10-06.08	H81W	**D1N046**	**A-607P**				**Drum**				
	06.09-07.07	H82W	**SN882**	**A-607P**				**Drum**				
	07.08-	H82W	**SN876**	**A-607P**				**Drum**				
	07.08-	H82W (Turbo)	**SN882**	**A-607P**				**Drum**				
	13.06-	B11W		**A-607P**				**Drum**				
FTO												
1800	94.09-00.07	DE2A	**D1N035**	**C-312P**				**D2N040**	**A-128P+ C-128LP**			
2000	94.09-00.07	DE3A (MIVEC Engine)	**D1N034**	**C-313P**				**D2N040**	**A-128P+ C-128LP**			
	94.09-00.07	DE3A	**D1N035**	**C-312P**				**D2N040**	**A-128P+ C-128LP**			

※1 91.03～Seal kit MB895028

cc	Year	Body Type	Front					Rear				
			Disc Pad	Seal Kit	Caliper		Piston	Disc Pad	Seal Kit	Caliper		Piston
					R	L				R	L	
GALANT/ ASPIRE ギャラン/アスパイア												
1800	96.07-00.05	EA1A, EC1A (Rear Drum)	**D1N035**	**A-312P**				**Drum**				
	96.07-00.05	EA1A, EC1A (Rear Disc)	**D1N035**	**A-312P**				**D2N032**	**C-224P**			
2000	00.05-02.09	EA7A, EC7A	**D1N035**	**A-312P**				**Drum**				
	02.09-05.12	EA7A, EC7A (16inch)	**D1N035**	**A-312P**				**D2N032**	**C-224P**			
	02.09-05.12	EA7A, EC7A	**D1N035**	**A-312P**				**Drum**				
2400	98.08-00.04	EA3A, EC3A	**D1N034**	**C-313P**				**D2N032**	**C-224P**			
	00.05-02.07	EA3A, EC3A	**D1N048**	**A-650P**				**D2N032**	**C-224P**			
2500	96.07-02.07	EC5A	**D1N034**	**C-313P**				**D2N036**	**A-348P**			
GALANT/ ETERNA/ EMERAUDE ギャラン/エテルナ/エメロード												
1800	92.03-96.08	E52A, 53A, 72A	**D1N035**	**C-312P**				**Drum**				
2000	92.03-93.08	E54A	**D1N035**	**A-312P※1**				**Disc Brake SN775P**	**C-224P**			
	93.09-95.07	E54A (MIVEC Engine)	**D1N034**	**C-313P**				**D2N032**	**A-348P**			
	93.09-95.07	E54A	**D1N035**	**A-312P※1**				**Disc Brake SN775P**	**C-224P**			
	95.08-96.08	E54A (DOHC)	**D1N034**	**C-313P**				**D2N032**	**A-348P**			
	95.08-96.08	E54A (SOHC)	**D1N035**	**A-312P**				**D2N032**	**C-224P**			
	92.06-96.08	E57A	**D1N035**	**C-312P**				**Drum**				
	92.03-93.10	E64A (GALANT/ ETERNA)	**D1N035**	**A-312P**				**D2N032**	**C-224P**			
	92.07-93.08	E64A (EMERAUDE)	**D1N035**	**A-312P**				**D2N032**	**C-224P**			
	93.09-96.08	E64A (EMERAUDE)	**D1N034**	**C-313P**				**D2N032**	**A-348P**			
	92.03-96.08	E74A, 84A	**D1N034**	**C-313P**				**D2N032**	**A-348P**			
	92.03-96.08	E74A, 84A (Turbo)	**D1N034**	**C-313P**				**D2N036**	**A-348P**			
	92.06-96.08	E77A	**D1N035**	**C-312P**				**Drum**				
GALANT FORTIS ギャラン フォルティス												
1800	09.12-	CY3A (16inch)	**D1N048**	**C-650P**				**D2N049**	**C-632P**			
	09.12-	CY3A (18inch)	**D1N048**	**C-650P**				**D2N097**	**C-632P**			
	11.10-	CY6A	**D1N048**	**C-650P**				**D2N049**	**C-632P**			
	11.10-	CX6A	**D1N048**	**C-650P**				**D2N097**	**C-632P**			
2000	07.08-09.12	CY4A (16inch)	**D1N048**	**C-650P**				**D2N049**	**C-632P※2**			
	07.08-09.12	CY4A (18inch)	**D1N048**	**C-650P**				**D2N097**	**C-632P※2**			
	08.06-	CY4A (RALLI ART)	**D1N034**	**C-313P**				**D2N097**	**A-651P**			
GALANT FORTIS SPORT BACK ギャラン フォルティス スポーツバック												
1800	09.12-	CX3A (16inch)	**D1N048**	**C-650P**				**D2N049**	**C-632P**			
	09.12-	CX3A (18inch)	**D1N048**	**C-650P**				**D2N097**	**C-632P**			
2000	08.12-09.12	CX4A (16inch)	**D1N048**	**C-650P**				**D2N049**	**C-632P**			
	08.12-09.12	CX4A (18inch)	**D1N048**	**C-650P**				**D2N097**	**C-632P**			
	08.12-	CX4A (RALLI ART)	**D1N034**	**C-313P**				**D2N097**	**A-651P**			
GTO												
3000	94.08-95.06	Z15A		**SP267**					**SP269**			
	95.07-00.08	Z15A		**SP267**				**D2N036**	**A-348P**			
	95.07-00.08	Z15A (Turbo)		**SP267**					**SP269**			
	90.09-92.09	Z16A		**SP267**				**D2N036**	**A-348P**			
	92.10-00.08	Z16A		**SP267**					**SP269**			
I アイ												
660	06.01-	HA1W	**H1N009**	**TP-80**				**Drum**				
i-MiEV アイミーブ												
EV	09.06-10.09	HA3W	**H1N009**	**TP-80**				**Drum**				
	10.10-13.04	HA3W	**D1N075**					**Drum**				
LANCER ランサー												
1300	91.08-95.11	CB1A	**D1N014**	**SP260**			D9N006	**Drum**				

※1 Rear Drum Car Seal kit (92.02～95.07) C-312P
※2 '09.12～ A-651P

MITSUBISHI

cc	Year	Body Type	Front					Rear				
			Disc Pad	Seal Kit	Caliper		Piston	Disc Pad	Seal Kit	Caliper		Piston
					R	L				R	L	
LANCER ランサー												
	91.08-95.11	CB1A (ABS)	**D1N013**	**SP261**			E9N006	**D2N040**	**A-128P+ C-128LP**			
	95.08-00.05	CK1A	**D1N013**	**SP261**			E9N006	**Drum**				
1500	91.08-95.11	CB2A, 3A	**D1N014**	**SP260**			D9N006	**Drum**				
	91.08-95.11	CB2A, 3A (ABS)	**D1N013**	**SP261**			E9N006	**D2N040**	**A-128P+ C-128LP**			
	91.08-94.08	CD3A	**D1N013**	**SP261**			E9N006	**Drum**				
	94.09-95.11	CD3A	**D1N014**	**SP260**			D9N006	**Drum**				
	91.08-95.11	CD3A (ABS)	**D1N013**	**SP261**			E9N006	**D2N040**	**A-128P+ C-128LP**			
	95.08-00.05	CK2A, CM2A	**D1N013**	**SP261**			E9N006	**Drum**				
	95.08-00.05	CK2A, CM2A (ABS)	**D1N013**	**SP261**			E9N006	**D2N040**	**A-128P+ C-128LP**			
	00.05-	CS2A	**D1N004**	**SP114**	D5R018	D5L018	E9N006	**Drum**				
1600	91.12-00.05	CB4A, 6A, CK4A	**D1N035**	**C-312P**				**D2N040**	**A-128P+ C-128LP**			
1800	91.08-92.10	CB7A, CD7A	**D1N013**	**SP261**			E9N006	**Drum**				
	91.08-92.10	CB7A, CD7A (ABS)	**D1N013**	**SP261**			E9N006	**D2N040**	**A-128P+ C-128LP**			
	91.10-95.11	CD5A	**D1N035**	**A-312P**				**D2N040**	**A-314P**			
	92.10-00.05	CB5AR, CK5AR	**D1N013**	**SP261**			E9N006	**Drum**				
	95.08-00.05	CK6A, CM5A	**D1N035**	**C-312P**				**D2N040**	**A-128P+ C-128LP**			
	01.09-	CS5AR, CS5AZ	**D1N004**	**SP114**	D5R018	D5L018	E9N006	**Drum**				
	00.05-04.11	CS5A	**D1N004**	**SP114**	D5R018	D5L018	E9N006	**Drum**				
	03.11-08.06	CS5A (Turbo)	**D1N048**	**A-650P**				**D2N049**	**A-651P**			
2000	92.10-95.11	CD8A	**D1N013**	**SP261**			E9N006	**Drum**				
	92.10-95.11	CD8A (ABS)	**D1N013**	**SP261**			E9N006	**D2N040**	**A-128P+ C-128LP**			
	92.10-96.10	CB8AR	**D1N013**	**SP261**			E9N006	**Drum**				
	95.08-99.06	CK8A, CM8A	**D1N013**	**SP261**			E9N006	**Drum**				
	95.08-99.06	CK8A, CM8A (ABS)	**D1N013**	**SP261**			E9N006	**D2N040**	**A-128P+ C-128LP**			
	05.01-08.06	CS6A	**D1N004**	**SP114**	D5R018	D5L018	E9N006	**Drum**				
	92.10-93.12	CD9A(Evolution1 '93Model)		**C-313P**					**A-314P**			
	94.01-96.07	CE9A(Evolution2, 3 '94, '95Model)		**C-313P**					**A-314P**			
	96.08-97.12	CN9A(Evolution4 '97Model)		**C-313P**					**C-224P**			
	98.01-98.12	CP9A(Evolution5 '98Model RS)		**C-313P**					**C-224P**			
	98.01-98.12	CP9A(Evolution5 '98Model Brembo)										
	99.01-00.05	CP9A(Evolution6 '99Model RS)		**C-313P**					**C-224P**			
	99.01-00.05	CP9A(Evolution6 '99ModelBrembo)										
	01.01-03.01	CT9A(Evolution7 '01Model RS)		**C-313P**					**C-224P**			
	01.01-03.01	CT9A(Evolution7 '01Model Brembo)										
	02.02-03.01	CT9A(Evolution7 '02Model GT-A)										
	03.01-04.01	CT9A(Evolution8 '03nodel RS)		**C-313P**					**C-224P**			
	03.01-04.01	CT9A(Evolution8 '03Model Brembo)										
	04.02-05.02	CT9A(Evolution8 '04Model RS)		**C-313P**					**C-224P**			
	04.02-05.02	CT9A(Evolution8 '04Model Brembo)										
	05.03-07.01	CT9A(Evolution9 '05Model RS)		**C-313P**					**C-224P**			

cc	Year	Body Type	Front					Rear				
			Disc Pad	Seal Kit	Caliper		Piston	Disc Pad	Seal Kit	Caliper		Piston
					R	L				R	L	
LANCER ランサー												
	05.03-07.01	CT9A(Evolution9 '05Model Brembo)										
	07.10-	CZ4A(Evolution10 '08Model RS)		**C-313P**					**A-475P**			
	07.10-	CZ4A(Evolution10 '08Model Brembo)										
LANCER CARGO ランサー カーゴ												
1200	08.12-	CVAY12	**B1N234**	**C-675P**				**Drum**				
1500	02.11-11.09	CS2V	**B1N037**	**TP-95**				**Drum**				
	08.12-	CVY12	**B1N234**	**C-675P**				**Drum**				
1600	08.12-	CVZNY12	**B1N234**	**C-675P**				**Drum**				
1800	08.12-	CVJY12	**B1N234**	**C-675P**				**Drum**				
LANCER WAGON ランサー ワゴン												
1500	05.01-08.06	CS2W	**D1N004**	**SP114**	D5R018	D5L018	E9N006	**Drum**				
1800	00.11-02.12	CS5W (Rear Drum)	**D1N004**	**SP114**	D5R018	D5L018	E9N006	**Drum**				
	01.05-08.06	CS5W (Rear Disc)	**D1N048**	**A-650P**				**D2N049**	**A-651P**			
2000	05.09-06.11	CT9W(Evolution Wagon Brembo)										
LEGNUM レグナム												
1800	96.08-00.05	EA1W, EC1W (Rear Drum)	**D1N035**	**A-312P**				**Drum**				
	96.08-00.05	EA1W, EC1W (Rear Disc)	**D1N035**	**A-312P**				**D2N032**	**C-224P**			
2000	96.08-98.08	EA4W (Rear Drum)	**D1N035**	**A-312P**				**Drum**				
	96.08-98.08	EA4W, EC4W (Rear Disc)	**D1N035**	**A-312P**				**D2N032**	**C-224P**			
	00.05-02.08	EA7W, EC7W	**D1N035**	**A-312P**				**Drum**				
2400	98.08-00.04	EA3W, EC3W	**D1N034**	**C-313P**				**D2N032**	**C-224P**			
	00.04-02.08	EA3W, EC3W	**D1N048**	**A-650P**				**D2N032**	**C-224P**			
2500	96.08-98.08	EA5W	**D1N035**	**A-312P**				**D2N032**	**C-224P**			
	96.08-02.08	EC5W	**D1N035**	**A-312P**				**D2N032**	**C-224P**			
	96.08-02.08	EC5W (Turbo)	**D1N034**	**C-313P**				**D2N036**	**A-348P**			
LIBERO CARGO リベロ カーゴ												
1300	92.04-95.08	CB1V	**D1N014**	**SP260**			D9N006	**Drum**				
	95.09-02.08	CB1V	**D1N014**	**SP261**			E9N006	**Drum**				
	95.09-02.08	CB1V (ABS)	**D1N013**	**SP261**			E9N006	**D2N040**	**A-314P**			
1500	92.04-99.05	CB2V	**D1N014**	**SP260**			D9N006	**Drum**				
	99.06-02.08	CB2V	**D1N013**	**SP261**			E9N006	**Drum**				
	92.04-02.08	CB2V (ABS)	**D1N013**	**SP261**			E9N006	**D2N040**	**A-314P**			
	92.04-02.08	CD2V	**D1N013**	**SP261**			E9N006	**Drum**				
2000	92.04-02.08	CB8V	**D1N013**	**SP261**			E9N006	**Drum**				
	92.04-02.08	CB8V (ABS)	**D1N013**	**SP261**			E9N006	**D2N040**	**A-314P**			
	92.04-02.08	CD8V	**D1N013**	**SP261**			E9N006	**Drum**				
LIBERO WAGON リベロ ワゴン												
1500	93.12-99.05	CB2W	**D1N014**	**SP260**			D9N006	**Drum**				
	99.06-02.08	CB2W	**D1N013**	**SP261**			E9N006	**Drum**				
	93.12-99.05	CB2W (ABS)	**D1N014**	**SP261**			E9N006	**D2N040**	**A-314P**			
	99.06-02.08	CB2W (ABS)	**D1N013**	**SP261**			E9N006	**D2N040**	**A-314P**			
1600	97.09-00.05	CB4W	**D1N013**	**SP261**			E9N006	**Drum**				
	97.09-00.05	CB4W (ABS)	**D1N013**	**SP261**			E9N006	**D2N040**	**A-314P**			
1800	92.04-00.05	CB5W	**D1N013**	**SP261**			E9N006	**Drum**				
	92.04-00.05	CB5W (ABS)	**D1N013**	**SP261**			E9N006	**D2N040**	**A-314P**			
	92.04-00.05	CD5W	**D1N035**	**C-312P**				**Drum**				
	92.04-00.05	CD5W (Turbo)	**D1N035**	**C-312P**				**SN842P**	**A-314P**			
2000	92.06-02.08	CB8W	**D1N013**	**SP261**			E9N006	**Drum**				
	92.06-02.08	CB8W (ABS)	**D1N013**	**SP261**			E9N006	**D2N040**	**A-314P**			

MITSUBISHI

cc	Year	Body Type	Front					Rear				
			Disc Pad	Seal Kit	Caliper		Piston	Disc Pad	Seal Kit	Caliper		Piston
					R	L				R	L	
LIBERO WAGON リベロ ワゴン												
	92.04-99.06	CD8W	**D1N035**	**C-312P**				**Drum**				
MINICA/ MINICA TOPPO/ TOPPO BJ ミニカ/ ミニカ トッポ/ トッポBJ												
660	93.08-98.12	H31A, 32A, 37A	**SN257**	**SP257**			G9N006	**Drum**				
	93.08-98.10	H36A (DANGAN)	**SN257**	**SP257**			G9N006	**SN843**	**A-128P+ C-128LP**			
	93.08-98.10	H36A	**SN257**	**SP257**			G9N006	**Drum**				
	98.08-07.07	H41A, 42A, 46A, 47A	**D1N046**	**A-607P**				**Drum**				
	08.09-	H82A	**SN876**	**A-607P**				**Drum**				
	08.09-	H82A (Turbo)	**SN882**	**A-607P**				**Drum**				
MINICA/ MINICA TOPPO/ TOPPO BJ (Van) ミニカ/ ミニカ トッポ/ トッポBJ (バン)												
660	93.08-98.10	H32V, 37V	**SN257**	**SP257**			G9N006	**Drum**				
	98.08-00.12	H42V, 47V	**D1N046**	**A-607P**				**Drum**				
	01.01-	H42V, 47V	**SN876**	**A-607P**				**Drum**				
	01.01-	H42V, 47V (ABS)	**D1N046**	**A-607P**				**Drum**				
MINICAB/ BRAVO (Van) ミニキャブ/ ブラボー (バン)												
660	90.12-95.01	U41V, 42V, 43V, 44V	**SN654**	**SP423**				**Drum**				
	95.01-99.08	U41V, 42V, 43V, 44V	**SN670**	**SP423**				**Drum**				
	98.11-	U61V, 62V	**SN876**	**A-607P**				**Drum**				
	14.02-	DS64V	**SN935**	**TP-80**								
MINICAB (Panel Van) ミニキャブ (パネルバン)												
660	90.12-95.01	U41TP, 42TP	**SN654**	**SP423**				**Drum**				
	95.01-99.08	U41TP, 42TP	**SN670**	**SP423**				**Drum**				
	98.11-	U61TP, 62TP	**SN876**	**A-607P**				**Drum**				
MINICAB (Truck) ミニキャブ (トラック)												
660	90.12-95.01	U41T, 42T	**SN654**	**SP423**				**Drum**				
	95.01-99.08	U41T, 42T	**SN670**	**SP423**				**Drum**				
	98.11-	U61T, 62T	**SN876**	**A-607P**				**Drum**				
	14.02-	DS16T	**H1N052**	**TP-80**								
MINICAB/ MIEV ミニキャブ/ ミーブ												
-	11.11-	U67V	**SN876**					**Drum**				
MIRAGE ミラージュ												
1000	12.08-	A05A	**D1N046**	**C-607P**				**Drum**				
1200	14.11-	A03A	**D1N046**	**C-607P**								
1300	91.08-95.11	CA1A, CB1A	**D1N014**	**SP260**			D9N006	**Drum**				
	91.08-95.11	CA1A, CB1A (ABS)	**D1N013**	**SP261**			E9N006	**D2N040**	**A-128P+ C-128LP**			
	95.08-00.08	CJ1A, CK1A	**D1N013**	**SP261**			E9N006	**Drum**				
1500	91.08-95.11	CA2A, 3A, CB2A, 3A	**D1N014**	**SP260**			D9N006	**Drum**				
	91.08-95.11	CA2A, 3A, CB2A, 3A(ABS)	**D1N013**	**SP261**			E9N006	**D2N040**	**A-128P+ C-128LP**			
1600	91.08-94.08	CC3A, CD3A	**D1N013**	**SP261**			E9N006	**Drum**				
	94.09-95.11	CC3A, CD3A	**D1N014**	**SP260**			D9N006	**Drum**				
	91.08-95.11	CC3A, CD3A (ABS)	**D1N013**	**SP261**			E9N006	**D2N040**	**A-128P+ C-128LP**			
	95.08-00.08	CK2A, CM2A, CJ2A, CL2A	**D1N013**	**SP261**			E9N006	**Drum**				
	95.08-00.08	CK2A, CM2A, CJ2A, CL2A(ABS)	**D1N013**	**SP261**			E9N006	**D2N040**	**A-128P+ C-128LP**			
	91.08-95.11	CC4A	**D1N035**	**A-312P**				**D2N040**	**A-314P**			

cc	Year	Body Type	Front					Rear				
			Disc Pad	Seal Kit	Caliper		Piston	Disc Pad	Seal Kit	Caliper		Piston
					R	L				R	L	
MIRAGE ミラージュ												
	91.12-95.11	CA4A, CB4A, 6A	**D1N035**	**C-312P**				**D2N040**	**A-128P+ C-128LP**			
	95.08-00.08	CJ4A (Down size tire)						**D2N040**	**A-128P+ C-128LP**			
	95.08-00.08	CJ4A (1POT)	**D1N035**	**C-312P**				**D2N040**	**A-128P+ C-128LP**			
	95.08-00.08	CJ4A (2POT)	**D1N034**	**C-313P**				**D2N040**	**A-128P+ C-128LP**			
	95.08-00.08	CK4A	**D1N035**	**C-312P**				**D2N040**	**A-128P+ C-128LP**			
1800	91.08-92.10	CB7A, CD7A	**D1N013**	**SP261**			E9N006	**Drum**				
	91.08-92.10	CB7A, CD7A (ABS)	**D1N013**	**SP261**			E9N006	**D2N040**	**A-128P+ C-128LP**			
	95.08-00.08	CK6A, CM5A	**D1N035**	**C-312P**				**D2N040**	**A-128P+ C-128LP**			
2000	92.10-95.11	CD8A	**D1N013**	**SP261**			E9N006	**Drum**				
	92.10-95.11	CD8A (ABS)	**D1N013**	**SP261**			E9N006	**D2N040**	**A-128P+ C-128LP**			
	92.10-94.08	CB8A	**D1N013**	**SP261**			E9N006	**Drum**				
	94.09-95.11	CB8A	**D1N014**	**SP260**			D9N006	**Drum**				
	92.10-95.11	CB8A (ABS)	**D1N013**	**SP261**			E9N006	**D2N040**	**A-128P+ C-128LP**			
	95.08-99.06	CK8A, CM8A	**D1N013**	**SP261**			E9N006	**Drum**				
	95.08-99.06	CK8A, CM8A (ABS)	**D1N013**	**SP261**			E9N006	**D2N040**	**A-128P+ C-128LP**			
MIRAGE DINGO ミラージュ ディンゴ												
1300	00.01-00.11	CQ1A	**D1N035**	**C-312P**				**Drum**				
	00.12-02.08	CQ1A	**D1N004**	**SP114**	D5R018	D5L018	E9N006	**Drum**				
1500	98.11-00.11	CQ2A	**D1N035**	**C-312P**				**Drum**				
	00.12-02.08	CQ2A	**D1N004**	**SP114**	D5R018	D5L018	E9N006	**Drum**				
1800	00.02-00.11	CQ5A	**D1N035**	**C-312P**				**Drum**				
	00.12-02.08	CQ5A	**D1N004**	**SP114**	D5R018	D5L018	E9N006	**Drum**				
OUTLANDER アウトランダー												
2000	10.01-	CW4W	**D1N048**	**C-650P**				**D2N097**	**C-632P**			
2400	05.10-	CW5W	**D1N048**	**C-650P**				**D2N097**	**C-632P**			
3000	07.10-12.10	CW6W	**D1N048**	**C-650P**				**D2N097**	**C-632P**			
	12.08-	GF7W	**D1N048**	**C-650P**				**★E2N086**	**A-786P**			
2000	12.08-	GG2W	**D1N048**	**C-650P**								
3000	12.08-	GF8W	**D1N048**	**C-650P**				**★E2N086**	**A-786P**			
OUTLANDER PHEV アウトランダー PHEV												
2000	12.12-15.06	GG2W	**SN889**	**C-650P**				**★E2N086**	**A-786P**			
	15.07-17.01	GG2W	**D1N034**	**C313P**				**★E2N086**	**A-786P**			
2400	18.08-	GG3W	**D1N034**	**C313P**								
PAJERO パジェロ												
2400	96.05-99.09	V21W	**D1N034**	**C-313P**				**D2N037**	**A-366P**			
2500	90.10-93.06	V14V, 34V	**D1N033**	**A-233P**				**Drum**				
	90.10-93.06	V24V	**D1N033**	**A-233P**				**D2N037**	**A-366P**			
	90.10-97.03	V24C	**D1N034**	**C-313P**				**D2N037**	**A-366P**			
	90.10-93.06	V24W, 24WG, 44W, 44WG	**D1N033**	**A-233P**				**D2N037**	**A-366P**			

★発売予定

MITSUBISHI

cc	Year	Body Type	Front					Rear				
			Disc Pad	Seal Kit	Caliper		Piston	Disc Pad	Seal Kit	Caliper		Piston
					R	L				R	L	
PAJERO パジェロ												
	90.10-93.06	V24W, 24WG, 44W, 44WG(ABS)	**D1N034**	**C-313P**				**D2N037**	**A-366P**			
	93.07-97.03	V24W, 24WG, 47WG	**D1N034**	**C-313P**				**D2N037**	**A-366P**			
2800	93.07-99.09	V26W, 26WG, 46W, 46WG, V26C, 46V	**D1N034**	**C-313P**				**D2N037**	**A-366P**			
3000	90.10-99.09	V23C, 23W, 43W	**D1N034**	**C-313P**				**D2N037**	**A-366P**			
	00.08-06.09	V63W, 73W	**D1N003**	**SP107**			D9N007	**D2N097**	**A-632P**			
	06.10-	V83W, 93W	**D1N003**	**SP107**			D9N007	**D2N097**	**A-632P**			
3200	99.06-04.11	V68W, 78W	**D1N003**	**SP107**			D9N007	**D2N097**	**A-632P**			
	08.10-	V98W	**A1N011**	**SP119A**	D5R020	D5L020	A9N016	**A2N012**	**SP259**			
	09.03-	V88W	**D1N003**	**SP107**			D9N007	**D2N097**	**A-632P**			
3500	93.07-99.09	V25C, 25W, 45W	**D1N034**	**C-313P**				**D2N037**	**A-366P**			
	97.08-99.09	V55W	**D1N003**	**SP107**			D9N007	**D2N037**	**A-366P**			
	99.06-05.11	V65W, 75W	**D1N003**	**SP107**				**D2N097**	**A-632P**			
3800	05.11-06.09	V77W	**D1N003**	**SP107**			D9N007	**D2N097**	**A-632P**			
	06.10-	V87W	**D1N003**	**SP107**			D9N007	**D2N097**	**A-632P**			
	06.10-	V97W	**A1N011**	**SP119A**	D5R020	D5L020	A9N016	**A2N012**	**SP259**	D5R015	D5L015	
PAJERO io パジェロ イオ												
1800	98.03-00.06	H61W, 66W, 71W	**D1N021**	**SP226**			D9N005	**Drum**				
	98.05-07.06	H76W	**D1N021**	**SP226**			D9N005	**Drum**				
	98.05-07.06	H76W (Turbo)	**D1N021**	**SP226**			D9N005	**D2N032**	**C-224P**			
2000	00.06-07.06	H62W, 67W, 72W, 77W	**D1N021**	**SP226**			D9N005	**Drum**				
PAJERO Jr パジェロ ジュニア												
1100	95.10-96.11	H57A	**D1N019**	**SP257**			G9N006	**Drum**				
	96.11-98.06	H57A	**D1N021**	**SP296**			D9N011	**Drum**				
PAJERO MINI パジェロ ミニ												
660	94.11-97.05	H51A, 56A	**D1N019**	**SP257**			G9N006	**Drum**				
	97.06-98.08	H51A, 56A	**D1N021**	**SP296**			D9N001	**Drum**				
	98.08-	H53A, 58A	**D1N021**	**SP296**			D9N001	**Drum**				
ROSA ローザ												
3000		BE640, BG640										
3600	85.11-89.10	BE435 (Front Drum)						**Drum**				
	85.11-89.10	BE435 (Front Disc) ED, EDH, EK44, EMD, EMH, ES	**SN244P**	**SP244**				**Drum**				
	89.10-91.09	BE435 (Front Disc) FK, FS, FKB, FMK, FMKB, FMKH	**SN279**	**SP268**				**Drum**				
	91.10-93.10	BE435 (Front Disc) FK, FS, FKB, FMK, FMKB, FMKH	**SN279E**	**SP268**				**Drum**				
	89.10-91.09	BE435 (Front Disc)	**SN244P**	**SP244**				**Drum**				
	91.10-93.10	BE435 (Front Disc)	**SN244E**	**SP244**				**Drum**				
	93.10-95.03	BE436 (Front Disc) FHK, FK54, 54A, FMKH, FMK54, 54A	**SN279E**	**SP202**				**Drum**				
	93.10-95.03	BE436 (Front Disc) ED, EDH, EDHJ, EK42, 42A, 44	**SN244E**	**SP244**				**Drum**				
	95.04-97.11	BE436 (Front Disc) EDH, EDHJ, EK44, 44A, EMD, EMK42, 44, ES, EMDA, EMK42A, 44A	**D1N020**	**M/T SP202**				**Drum**				
	95.04-97.11	BE436 (Front Disc) EDH, EDHJ, EK44, 44A, EMD, EMK42, 44, ES, EMDA, EMK42A, 44A	**D1N020**	**A/T SP201**				**Drum**				
	97.08-99.04	BE636, EDH, EK44, EMD, EMK42, 44, ES	**SN279E**	**SP202**				**Drum**				
	97.08-99.04	BE636, EK44A, EMDA, EMK42A, 44A	**D1N020**	**SP201**				**Drum**				
3900	89.10-91.09	BE439, 449, 459	**SN279**	**SP268**				**Drum**				
	91.10-93.10	BE439, 449, 459	**SN279E**	**SP268**				**Drum**				
	93.11-95.03	BE439, 449, 459	**SN279E**	**SP202**				**Drum**				

cc	Year	Body Type	Front					Rear				
			Disc Pad	Seal Kit	Caliper		Piston	Disc Pad	Seal Kit	Caliper		Piston
					R	L				R	L	
ROSA ローザ												
	95.04-97.11	BE439, 449, 459	**D1N020**	**SP201**				**Drum**				
4200	89.10-91.09	BE437	**SN279**	**SP268**				**Drum**				
	91.09-95.05	BE437, EMD, EMDA, EMH, EMHA, EMHJ, EU6	**SN244E**	**SP244**				**Drum**				
	91.09-93.10	BE437, FD, FDA, FDH, FDHA, FDHJ, FDM, FMHJA, FMK54, 54A	**SN279E**	**SP268**				**Drum**				
	93.11-95.05	BE437, FD, FDA, FDH, FDHA, FDHJ, FDM, FMHJA, FMK54, 54A	**SN279E**	**SP202**				**Drum**				
	89.08-95.05	BG437						**Drum**				
	99.04-03.08	BE63C, EMK4455	**SN279E**	**SP202**				**Drum**				
	03.09-04.08	BE63C, EMK4455	**D1N020**	**SP108**				**Drum**				
	99.04-04.08	BE63C, ES, EDH, EK44, EMD, EMHB, EMHJ, EMK42, 44	**SN279E**	**SP202**				**Drum**				
	99.04-	BE63C, EK44A, EMDA, EMK44A, GDH, GMD, GMHB, GMHBJ, EMK42A, GMHB55, GMHBJ55, GMKH55, EMHBA	**D1N020**	**SP108**				**Drum**				
	99.04-	BE63C, Size up brake	**D1N020**	**SP108**				**Drum**				
4600	95.04-97.09	BE438, EMH, EMHJ, EU6	**SN279E**	**SP202**				**Drum**				
	95.04-97.09	BE438, EMHA, EU6A, FDH, FDHA, FK, FKA, FMD, FMH, FMHA, FMHJ, FMHJA, FMK, FMKA, FMKH, FU9, FU9A	**D1N020**	**SP201**				**Drum**				
	89.12-95.03	BG438						**Drum**				
4900	97.08-99.04	BE644, 654	**D1N020**	**SP201**				**Drum**				
	04.09-07.06	BG64D, GCA3, GCJA3, GCJN3, GCN3, GDN3, GUA3, GUN3	**D1N020**	**SP108**				**SN295E**	**SP108**			
	07.06-	BG64D, GCA4, GCJA4, GCJN4, GCN4, GKA4, GKN4, GUA4, GUN4	**D1N020**	**SP201**				**Drum**				
	99.04-07.06	BE66D, GGA5, GGN5, GRA5, GSRV, GSRVA, GUG9, GUV5, GUV5A, GU6, GU6A, GU9, GU9A	**D1N020**	**SP108**				**SN295E**	**SP108**			
	07.06-	BE66D, GU6A5, GU6N5, GU9A5, GU9N5	**D1N020**	**SP201**				**Drum**				
	99.04-07.06	BE64D, GMH, GMHA, GMHJ, GMHJA, GMHL, GMHLA, GUG9, GUG9A, CU6, CU6A, GU9, GU9A, EUA4, EUN4, GLA4, GLA5, GLN4, GLN5	**D1N020**	**SP108**				**SN295E**	**SP108**			
	99.04-07.06	BE64D, JMH, JMHA, JMHJ, JMHJA, JU9, JU9A, JCA5, JCJA5, JCJN5, JCN5, JUA5, JUN5	**D1N020**	**SP201**				**Drum**				
	07.06-	BE64D, EUA4, EUN4, GLA5, GLN5, JCA5, JCJA5, JCJN5, JCN5, JUA5, JUNL5	**D1N020**	**SP201**				**Drum**				
	04.06-	BE63D (Front Drum)						**Drum**				
	04.06-07.06	BE63D (Front Disc)	**D1N020**	**SP108**				**SN295E**	**SP108**			
	07.06-	BE63D (Front Disc)	**D1N020**	**SP201**				Disc Brake SN295E	**SP108**			
5200	97.08-99.04	BG642, BE642, BE642J	**D1N020**	**SP201**				**Drum**				
	97.08-99.04	BE632 (Front Drum)						**Drum**				
	97.08-99.04	BE632 (Front Disc) EDH, EMH, EMHJ, EU6	**SN279E**	**SP202**				**Drum**				
	97.08-99.04	BE632 (Front Disc) EMHA, EU6A, GDH, GK, GKA, GMD, GMH, GMHA, GMHJ, GMHJA, GMK, GMKA, GMKH, GMKHA	**D1N020**	**SP201**				**Drum**				
	99.04-04.08	BG64E	**D1N020**	**SP108**				**SN295E**	**SP108**			
	99.04-04.08	BE63E (Front Drum)						**Drum**				

MITSUBISHI

MITSUBISHI

cc	Year	Body Type	Front					Rear				
			Disc Pad	Seal Kit	Caliper		Piston	Disc Pad	Seal Kit	Caliper		Piston
					R	L				R	L	
ROSA ローザ												
		BE63E (Front Disc) EMHA, EMHA3, EMHJA,										
		EMK42A, EU6A, DGH, GK, GKA, GMD, GMH,										
	99.04-04.08	GMHA, GMHA3, GMHJ, GMHJA, GMHL,	**D1N020**	**SP108**				**SN295E**	**SP108**			
		GMHLA, GMH3, GMK, GMKA, GMKH, GMKHA,										
		EMK42A3, GMKHA3, GMKH3										
	99.04-04.08	BE63E (Front Disc) EDH, EMHJ, EMH, EMH3, EU6, EMK42, EMK423	**SN279E**	**SP202**				**Drum**				
	99.04-04.08	BE63E Size up brake ver	**D1N020**	**SP108**				**SN295E**	**SP108**			
	99.04-01.04	BE64E, JMH, JMHA, JMHJ, JMHJA	**D1N020**	**SP201**				**Drum**				
	99.04-04.08	BE64E, GMH, GMHA, GU9, GU9A	**D1N020**	**SP108**				**SN295E**	**SP108**			
PROUDIA プラウディア												
2500	12.07-	BY51	**B1N036**	**TP-83**				**SN509P**	**C-745P**			
3500	00.02-01.05	S32A	**D1N003**	**SP107**			D9N007	**D2N036**	**A-348P**			
3700	12.07-	BKY51, BKNY51	**B1N036**	**TP-83**				**SN509P**	**C-745P**			
4500	00.02-01.05	S33A, 43A	**D1N003**	**SP107**			D9N007	**D2N036**	**A-348P**			
RVR												
1800	10.02-	GA3W	**D1N048**	**C-650P**				**D2N097**	**C-632P**			
	11.10-12.09	GA4W	**D1N048**	**C-650P**				**D2N097**	**C-632P**			
	12.10-	GA4W	**D1N048**	**C-650P**				**★E2N086**	**A-786P**			
RVR/ SPORTS GEAR RVR/ スポーツギア RVR												
1800	91.05-97.11	N11W, 21W, 21WG	**D1N035**	**A-312P**				**Drum**				
	91.05-97.11	N11W, 21W, 21WG (ABS)	**D1N035**	**A-312P**				**D2N032**	**C-224P**			
	97.09-02.08	N61W, 71W	**D1N045**	**A-487P**				**Drum**				
2000	91.01-97.11	N13W	**D1N035**	**A-312P**				**D2N032**	**C-224P**			
	91.01-94.08	N23W, 23WG	**D1N035**	**A-312P**				**D2N032**	**C-224P**			
	94.09-97.11	N23W, 23WG	**D1N035**	**A-312P**				**D2N032**	**C-224P**			
	94.09-97.11	N23W, 23WG (Turbo)	**D1N034**	**C-313P**				**D2N032**	**C-224P**			
	92.09-97.11	N28W, 28WG	**D1N035**	**A-312P**				**Drum**				
	92.09-97.11	N28W, 28WG (ABS)	**D1N035**	**A-312P**				**D2N032**	**C-224P**			
	97.09-00.11	N73WG	**D1N045**	**A-487P**				**D2N032**	**C-224P**			
2400	97.09-02.08	N64WG, 74WG	**D1N045**	**A-487P**				**Drum**				
SIGMA シグマ												
2000	90.10-95.08	F11A, 12A	**D1N035**	**A-312P**				**D2N032**	**C-224P**			
2500	90.10-93.09	F13A (25E)	**D1N035**	**A-312P**				**D2N032**	**C-224P**			
	93.10-95.08	F13A	**D1N034**	**A-313P**				**D2N032**	**A-224P**			
	90.10-93.09	F15A	**D1N034**	**A-313P**				**D2N032**	**A-224P**			
	90.10-95.08	F25A	**D1N034**	**A-313P**				**D2N036**	**A-348P**			
3000	90.10-95.08	F17A	**D1N034**	**A-313P**				**D2N032**	**A-224P**			
	90.10-93.09	F27A	**D1N034**	**A-313P**				**D2N036**	**A-348P**			
STRADA ストラーダ												
2500	91.03-97.05	K34T	**D1N033**	**A-233P**				**Drum**				
	97.06-99.11	K74T	**D1N034**	**C-313P**				**Drum**				
TOPPO BJ WIDE トッポBJワイド												
1100	98.11-01.05	H43A, 48A	**D1N046**	**A-607P**				**Drum**				
TOWNBOX タウンボックス												
660	98.11-	U61W, 62W, 63W, 64W	**D1N046**	**A-607P**				**Drum**				
	14.02-	DS64W	**H1N052**	**TP-80**								
TOWNBOX WIDE タウンボックス ワイド												
1100	99.06-01.05	U65W, 66W	**D1N046**	**A-607P**				**Drum**				

★発売予定

cc	Year	Body Type	Front					Rear				
			Disc Pad	Seal Kit	Caliper		Piston	Disc Pad	Seal Kit	Caliper		Piston
					R	L				R	L	
TRITON トライトン												
3500	06.09-	KB9T						**Drum**				

MITSUBISHI

SPECIFIC INDEX FOR MAZDA

CAR NAME	PAGE
ATENZA SEDAN/ SPORTS アテンザ セダン/ スポーツ	79
ATENZA SPORTS WAGON アテンザ スポーツ ワゴン	79
AXELA SEDAN/ SPORTS アクセラ セダン/ スポーツ	79
AZ-OFFROAD AZ-オフロード	79
AZ WAGON AZ ワゴン	80
AZ-3/ EUNOS PRESSO AZ-3/ ユーノス プレッソ	80
BONGO(Van) ボンゴ(バン)	80
BONGO(Wagon) ボンゴ(ワゴン)	80
BONGO(Truck) ボンゴ(トラック)	80
BONGO BRAWNY (Wagon) ボンゴ ブローニィ (ワゴン)	80
BONGO BRAWNY (Van) ボンゴ ブローニィ (バン)	81
BONGO BRAWNY (Truck) ボンゴ ブローニィ (トラック)	81
BONGO FRIENDEE (Wagon) ボンゴ フレンディ (ワゴン)	81
BIANTE ビアンテ	81
CAPELLA カペラ	81
CAPELLA WAGON カペラ ワゴン	81
CAPELLA CARGO カペラ カーゴ	82
CAROL キャロル	82
CX-3	82
CX-5	82
CX-7	82
DEMIO デミオ	82
FAMILIA ファミリア	82
FAMILIA (Training Vehicle) ファミリア (教習車)	83
FAMILIA S-WAGON ファミリア S-ワゴン	83
FAMILIA(Van) ファミリア(バン)	83
FAMILIA (Wagon) ファミリア (ワゴン)	84
FESTIVA フェスティバ	84
FESTIVA MINI WAGON フェスティバ ミニワゴン	84
FRAIR/ FRAIR WAGON フレア/ フレアワゴン	84
FREDA フリーダ	84
IXION イクシオン	84
J100 (Truck) J100 (トラック)	84
J100 (Van) J100 (バン)	85
LANTIS ランティス	85

CAR NAME	PAGE
LAPUTA ラピュタ	85
LASER レーザー	85
LASER RIDEA レーザー リデア	85
MILLENIA/ EUNOS 800 ミレーニア/ ユーノス 800	85
MPV	85
MS-8	86
PREMACY プレマシー	86
PROBE プローブ	86
PROCEED LEVANTE プロシードレバンテ	86
PROCEED/ PROCEED MARVIE プロシード/ プロシード マービー	86
REVUE レビュー	86
RX-7	86
RX-8	86
ROADSTER ロードスター	86
SCRUM (Van/ Wagon/ Truck) スクラム (バン/ ワゴン/ トラック)	87
SENTIA/ MS-9 センティア/ MS-9	87
SPECTRON (Wagon) スペクトロン (ワゴン)	87
SPECTRON/ J80 (Van) スペクトロン/ J80 (バン)	87
SPECTRON/ J80 (Truck) スペクトロン/ J80 (トラック)	87
SPIANO スピアーノ	87
TELSTAR テルスター	87
TELSTAR Ⅱ テルスターⅡ	87
TELSTAR (Wagon) テルスター (ワゴン)	87
TITAN 2000 タイタン 2000	88
TITAN 2500 タイタン 2500	88
TITAN 3000 タイタン 3000	88
TITAN 3100 タイタン 3100	89
TITAN 4000 タイタン 4000	89
TITAN 4300 タイタン 4300	90
TITAN 4600 タイタン 4600	90
TITAN 4800 タイタン 4800	91
TITAN 5200 タイタン 5200	91
TRIBUTE トリビュート	91
VERISA ベリーサ	92

cc	Year	Body Type	Front					Rear				
			Disc Pad	Seal Kit	Caliper		Piston	Disc Pad	Seal Kit	Caliper		Piston
					R	L				R	L	
ATENZA SEDAN/SPORTS アテンザ セダン/スポーツ												
2000	02.05-07.12	GGEP, GGES	**SN599P**	**TP-104N**				**E2N033**	**C-AD35P**			
	08.01-10.01	GHEFS	**E1N071**	**SP143**				**E2N033**	**C-AD35P**			
	08.01-12.10	GHEFP	**E1N071**	**SP143**				**E2N033**	**C-AD35P**			
	12.10-15.04	GJEFP(2WD)		**SP460**					**C-786P**			
2200	12.10-15.04	GJEFP(2WD)		**SP460**								
2300	02.05-07.12	GG3P, GG3S	**SN599P**	**TP-104N**				**E2N033**	**C-AD35P**			
	02.05-05.04	GG3S (18inch)	**SN919P**	**TP-105N**				**E2N033**	**C-AD35P**			
	05.05-07.12	GG3S (18inch)	**E1N068**	**TP-105N**				**E2N067**				
2500	07.12-	GH5FP, GH5AP, GH5AS, GH5FS	**E1N071**	**SP143**				**E2N033**	**C-AD35P**			
	07.12-	GH5FS(18inch)	**E1N068**					**E2N067**				
	12.09-15.01	GJ5FW(2WD)		**SP460**								
	12.10-15.04	GJ5FP(2WD)		**SP460**								
ATENZA SPORTS WAGON アテンザ スポーツ ワゴン												
2000	02.06-07.12	GYEW	**SN599P**	**TP-104N**				**E2N033**	**C-AD35P**			
	08.01-12.09	GHEFW	**E1N071**	**SP143**				**E2N033**	**C-AD35P**			
	12.09-15.01	GJEFW(2WD)		**SP460**								
2200	12.09-15.01	GJ2FW(2WD)		**SP460**								
2300	02.06-07.12	GY3W	**SN599P**	**TP-104N**				**E2N033**	**C-AD35P**			
	02.05-05.04	GY3W (4WD, 18inch)	**SN919P**	**TP-105N**				**E2N033**	**C-AD35P**			
	05.05-07.12	GY3W (4WD, 18inch)	**E1N068**					**E2N067**				
2500	07.12-	GH5FW , GH5AW		**SP143**				**E2N033**	**C-AD35P**			
	07.12-10.01	GH5FW (18inch)	**E1N068**					**E2N067**				
	12.09-	GJ5FW		**SP460**								
AXELA SEDAN/SPORTS アクセラ セダン/スポーツ												
1500	03.09-	BK5P (Rear Drum)	**SN918**					**Drum**				
	03.09-	BK5P (Rear Disc)	**SN918**					**E2N065**				
	09.06-	BL5FW, BL5FP	**SN918**					**E2N065**				
	13.11-17.03	BM5FS, BM5AS	**★E1N108**					**★E2N109**				
	17.03-	BM5FS(2WD) , BM5AS(4WD)	**SN203P**					**SN216P**				
	13.11-17.03	BM5FP(2WD) BM5AP(4WD)	**★E1N108**					**★E2N109**				
	17.03-		**SN203P**					**SN216P**				
	16.07-17.03	BMLFS(2WD)	**★E1N108**					**★E2N109**				
	17.03-	BMLFS(2WD)	**SN203P**					**SN216P**				
	17.08-	BMLFP(2WD)	**SN203P**					**SN216P**				
2000	03.09-	BKEP	**SN918**					**E2N065**				
	09.06-	BLEFW, BLEAW, BLEFP, BLEAP	**SN918**					**E2N065**				
	13.11-	BMEFS	**★E1N108**					**★E2N109**				
	13.11-	BM2FS(Diesel)										
	13.11-15.10	BYEFP	**SN188**	**SP460**				**★E2N086**	**C-786P**			
2200	13.11-	BM2FS	**★E1N108**					**★E2N109**				
	15.12-17.03	BM2FP(2WD) , BM2AP(4WD)	**★E1N108**									
	17.03-	BM2FP(2WD) , BM2AP(4WD)	**SN203P**									
	16.07-17.03	BM2FS(2WD) , BM2AS(4WD)	**★E1N108**									
	17.03-	BM2FS(2WD) , BM2AS(4WD)	**★E1N108**									
2300	03.09-	BK3P	**SN918**					**E2N065**				
	06.06-	BK3P (Mazda Speed)						**E2N065**				
	09.06-	BL3FW						**E2N065**				
AZ-OFFROAD AZ-オフロード												
660	98.10-	JM23W	**H1N011**	**MP-40**				**Drum**				

★発売予定

MAZDA

MAZDA

cc	Year	Body Type	Front					Rear				
			Disc Pad	Seal Kit	Caliper		Piston	Disc Pad	Seal Kit	Caliper		Piston
					R	L				R	L	
AZ WAGON AZ ワゴン												
660	94.07-97.01	CY21S, CZ21S (C/ #~110001)	**H1N005**	**TP-13**				**Drum**				
	95.01-98.10	CY21S, CZ21S (C/ #110002~)	**H1N008**	**TP-80**				**Drum**				
	94.07-98.10	CY21S, CZ21S (Turbo)	**H1N014**	**MP-34**				**Drum**				
	97.04-98.10	CY21S, CZ21S(ZG-4S, FX, ZG Without ABS)	**H1N008**	**TP-80**				**Drum**				
	97.04-98.10	CY21S, CZ21S(ZG-4S, FX With ABS)	**H1N014**	**MP-34**				**Drum**				
	97.04-98.10	CY51S, CZ51S	**H1N008**	**TP-80**				**Drum**				
	97.04-98.10	CY51S, CZ51S (Turbo)	**H1N014**	**MP-34**				**Drum**				
	97.04-98.10	CY51S, CZ51S(FX, FM, ZX, Without ABS)	**H1N008**	**TP-80**				**Drum**				
	97.04-98.10	CY51S, CZ51S(FX ABS)	**H1N014**	**MP-34**				**Drum**				
	98.10-03.09	MD11S, 12S, 21S, 22S	**H1N009**	**TP-80**				**Drum**				
	03.10-04.11	MJ21S	**SN935**	**TP-80**				**Drum**				
	04.12-07.04	MJ21S	**SN935**	**TP-80**				**Drum**				
	03.10-05.09	MJ21S (Turbo)	**SN935**	**TP-80**				**Drum**				
	05.10-07.04	MJ21S (Turbo)	**SN935**	**TP-80**				**Drum**				
	07.05-08.09	MJ22S	**SN935**	**TP-80**				**Drum**				
	08.09-	MJ23S	**SN935**	**TP-80**				**Drum**				
AZ-3/ EUNOS PRESSO AZ-3/ ユーノス プレッソ												
1500	91.06-93.09	EC5SA (Rear Drum)	**E1N016**	**SP252**				**Drum**				
	91.06-93.09	EC5SA (Rear Disc)	**E1N016**	**SP252**				**G2N010**	**TP-85N**			
	93.09-98.06	EC5SA (Rear Disc)	**E1N016**	**SP252**				**E2N032**	**C-209AP**			
	93.09-98.03	EC5S (Rear Drum)	**E1N016**	**SP252**				**Drum**				
	93.09-98.03	EC5S (Rear Disc)	**E1N016**	**SP252**				**E2N032**	**C-209AP**			
1800	91.04-98.03	EC8S (GT)	**E1N016**	**SP252**				**E2N032**	**C-209AP**			
	91.04-98.03	EC8S (HIX)	**E1N016**	**SP252**				**G2N010**	**TP-85N**			
	93.09-98.06	ECPSA	**E1N016**	**SP252**				**E2N032**	**C-209AP**			
	91.06-93.09	EC8SE	**E1N016**	**SP252**				**G2N010**	**TP-85N**			
BONGO(Van) ボンゴ(バン)												
1500	90.07-95.09	SS58V	**E1N009**	**SP236**				**Drum**				
1800	84.10-99.05	SS88M, 88H, 88V	**E1N009**	**SP236**				**Drum**				
	99.05-	SK82M, 82V	**SN281P**	**SP237**				**Drum**				
	10.08-	SKP2V, 2M	**SN281P**	**SP237**				**Drum**				
2000	83.09-95.09	SSF8V	**E1N009**	**SP236**				**Drum**				
	03.12-	SKF2M, SKF2V	**SN281P**	**SP237**				**Drum**				
2200	86.11-99.05	SS28M, 28H, 28V	**E1N009**	**SP236**				**Drum**				
	99.05-03.12	SK22M, 22V	**SN281P**	**SP237**				**Drum**				
BONGO(Wagon) ボンゴ(ワゴン)												
2000	89.01-99.05	SSE8R, 8W, SSF8R, 8W	**E1N009**	**SP236**				**Drum**				
BONGO(Truck) ボンゴ(トラック)												
1500	90.07-95.09	SE58T	**E1N009**	**SP236**				**Drum**				
1800	85.09-99.05	SE88M, SE88T	**E1N009**	**SP236**				**Drum**				
	99.05-	SK82L, 82T	**SN281P**	**SP237**				**Drum**				
	10.08-	SKP2T, SKP2L	**SN281P**	**SP237**				**Drum**				
2000	84.04-93.08	SEF8T						**Drum**				
	03.12-	SKF2L, SKF2T	**SN281P**	**SP237**				**Drum**				
2200	87.09-99.05	SE28M, SE28T	**E1N009**	**SP236**				**Drum**				
	99.05-03.12	SK22L, 22T	**SN281P**	**SP237**				**Drum**				
BONGO BRAWNY (Wagon) ボンゴ ブローニィ (ワゴン)												
2000	83.05-95.09	SRE9W, SRF9W	**E1N009**	**SP236**				**Drum**				

C/ #=Chassis Number

cc	Year	Body Type	Front					Rear				
			Disc Pad	Seal Kit	Caliper		Piston	Disc Pad	Seal Kit	Caliper		Piston
					R	L				R	L	
BONGO BRAWNY (Van) ボンゴ ブローニィ (バン)												
1800	83.05-93.08	SR89V	**E1N009**	**SP236**				**Drum**				
2000	85.07-97.05	SRE9V	**E1N009**	**SP236**				**Drum**				
	85.07-99.06	SREAV	**E1N009**	**SP236**				**Drum**				
	99.06-10.07	SKE6V	**E1N021**	**SP281**				**Drum**				
	04.11-10.07	SKF6V	**E1N021**	**SP281**				**Drum**				
	04.11-07.08	SKFHV, SKF6M, SKFHM	**E1N021**	**SP281**				**Drum**				
2200	83.05-97.05	SR29V, 2AV, 2AM	**E1N009**	**SP236**				**Drum**				
2500	97.04-99.06	SR5AM, 5AV, 59V	**E1N009**	**SP236**				**Drum**				
	99.06-04.11	SK5HM, 5HV, 54V, SK56M, 56V	**E1N021**	**SP281**				**Drum**				
3000	92.02-97.05	SRS9V, SRSAV	**E1N009**	**SP236**				**Drum**				
BONGO BRAWNY (Truck) ボンゴ ブローニィ (トラック)												
1800	83.12-99.06	SD89T	**E1N009**	**SP236**				**Drum**				
2000	83.12-99.06	SDEAT	**E1N009**	**SP236**				**Drum**				
	99.06-00.10	SKE6T, 4T (1.1t)	**E1N021**	**SP281**				**Drum**				
	99.06-00.10	SKE4T (1.35t)	**SN116**	**SP281**				**Drum**				
2200	83.12-99.06	SD29T, 29M, 2AT, 2AM	**E1N009**	**SP236**				**Drum**				
	99.06-00.10	SK24T, 24L, 26T, 26L	**E1N021**	**SP281**				**Drum**				
2500	97.04-99.06	SD5AM, 5AT, 59M, 59T	**E1N009**	**SP236**				**Drum**				
	99.06-00.10	SK54L, 56T, 56L	**E1N021**	**SP281**				**Drum**				
	99.06-00.10	SK54T	**SN116**	**SP281**				**Drum**				
BONGO FRIENDEE (Wagon) ボンゴ フレンディ (ワゴン)												
2000	95.05-05.11	SGEW, SGE3	**E1N021**	**SP281**				**SN657P**	**A-344P**			
2500	95.05-05.11	SG5W, SGLW, SGLR, SGL3, SGL5	**E1N021**	**SP281**				**SN657P**	**A-344P**			
BIANTE ビアンテ												
2000	08.07-	CCEFW, CCEAW	**SN918**					**E2N065**				
2300	08.07-	CC3FW	**SN918**					**E2N065**				
CAPELLA カペラ												
1800	94.07-97.06	CG2PP (Rear Drum)	**E1N026**					**Drum**				
	94.07-97.06	CG2PP (Rear Disc)	**E1N026**					**SN656**				
	97.06-02.08	GF8P	**E1N026**					**Drum**				
2000	94.07-97.06	CG2SP (Rear Drum)	**E1N026**					**Drum**				
	94.07-97.06	CG2SP (Rear Disc)	**E1N026**					**SN656**				
	94.07-97.06	CG2SR (Rear Drum)	**E1N026**					**Drum**				
	94.07-97.06	CG2SR (Rear Disc)	**E1N026**					**E2N033**	**C-219P**			
	97.06-99.09	GFEP	**E1N026**					**SN656**	**TP-85N**			
	99.09-02.08	GFEP	**E1N026**					**E2N043**	**TP-85N**			
	97.06-02.08	GFER	**E1N026**					**E2N033**	**A-AD35P**			
	98.06-99.09	GFFP	**E1N026**					**Drum**				
CAPELLA WAGON カペラ ワゴン												
1800	88.01-97.10	GV8W	**E1N035**	**A-249P**				**SN785**	**A-250P**			
	97.10-02.08	GW8W	**E1N026**					**Drum**				
2000	89.05-97.10	GVFW	**E1N035**	**A-249P**				**SN785**	**A-250P**			
	92.07-97.10	GVFR	**SN848P**	**A-454P**				**E2N033**	**C-219P**			
	95.12-97.10	GVER (FX, FX-CR)	**SN848P**	**A-454P**				**E2N033**	**C-219P**			
	96.06-97.10	GVEW	**E1N035**	**A-249P**				**SN785**	**A-250P**			
	97.10-02.08	GWEW	**E1N026**					**E2N033**	**A-AD35P**			
	97.10-02.08	GWER, GWFW	**E1N042**					**E2N033**	**A-AD35P**			
2500	97.10-02.08	GW5R	**E1N042**					**E2N033**	**A-AD35P**			

MAZDA

cc	Year	Body Type	Front					Rear				
			Disc Pad	Seal Kit	Caliper		Piston	Disc Pad	Seal Kit	Caliper		Piston
					R	L				R	L	
CAPELLA CARGO カペラ カーゴ												
1600	88.01-99.06	GV6V (Rear Drum)	**E1N035**	**A-249P**				**Drum**				
	88.01-99.06	GV6V (Rear Disc)	**E1N035**	**A-249P**				**SN785**	**A-250P**			
2000	88.01-99.04	GVFV (Rear Drum)	**E1N035**	**A-249P**				**Drum**				
	88.01-99.04	GVFV (Rear Disc)	**E1N035**	**A-249P**				**SN785**	**A-250P**			
CAROL キャロル												
660	95.10-98.09	AC6P	**H1N008**	**TP-80**				**Drum**				
	95.10-98.09	AC6P (Turbo, ABS)	**H1N014**	**MP-34**				**Drum**				
	95.10-98.09	AC6R	**H1N008**	**TP-80**				**Drum**				
	98.10-00.12	HB12S	**H1N009**	**TP-80**				**Drum**				
	98.10-02.02	HB22S	**H1N009**	**TP-80**				**Drum**				
	00.12-04.09	HB23S	**H1N009**	**TP-80**				**Drum**				
	04.09-05.02	HB24S	**H1N009**	**TP-80**				**Drum**				
	05.02-09.12	HB24S (C/ #103419~) (C/ #502192~)	**SN935**	**TP-80**				**Drum**				
	09.12-	HB25S	**H1N052**	**TP-80**				**Drum**				
	12.11-	HB35S	**H1N052**	**TP-80**				**Drum**				
	15.01-	HB36S		**TP-80**								
CX-3												
1500	14.12-	DK5FW(2WD) , DK5AW(4WD)	**★E1N108**					**★E2N088**	**TP-124**			
1800	18.05-	DK8FW										
2000	17.06-	DKEAW(4WD) , DKEFW(2WD)	**★E1N108**					**★E2N088**	**TP-124**			
CX-5												
2000	12.10-14.11	KEEAW(4WD) , KEEFW(2WD)	**★E1N085**					**★E2N088**				
	14.11-	KEEAW(4WD) , KEEFW(2WD)	**★E1N085**									
	16.11	KFEP	**★E1N085**									
2200	12.01-14.11	KE2AW(4WD) , KE2FW(2WD)	**★E1N085**					**★E2N088**				
	14.11-	KE2AW(4WD) , KE2FW(2WD)	**★E1N085**									
	16.11-	KF2P(ディーゼル)	**★E1N085**									
2500	13.10-14.11	KE5AW(4WD) , KE5FW(2WD)	**★E1N085**					**★E2N088**				
	14.11-	KE5AW(4WD) , KE5FW(2WD)	**★E1N085**									
	16.11-	KF5P	**★E1N085**									
CX-7												
2300	06.12-	ER3P	**E1N053**	**SP401**				**SN586**				
DEMIO デミオ												
1300	96.07-02.08	DW3W	**E1N014**	**SP282**				**Drum**				
	02.08-07.05	DY3W, 3R	**SN901**					**Drum**				
	07.05-	DE3FS, DE3AS	**E1N080**	**TP-107**				**Drum**				
	11.07-14.09	DEJFS	**E1N080**	**TP-107**				**Drum**				
	14.09-	DJ3FS	**★E1N107**	**TP-107**				**Drum**				
	14.09-	DJ3AS	**★E1N107**	**TP-117**				**Drum**				
1500	96.07-02.08	DW5W	**E1N014**	**SP282**				**Drum**				
	02.08-07.05	DY5W, 5R	**SN901**					**Drum**				
	07.05-	DE5FS	**E1N080**	**TP-107**				**Drum**				
	07.05-	DE5FS (Side Spoiler)	**A1N197**	**TP-108**				**Drum**				
	14.09-	DJ5FS/ DJ5AS	**★E1N107**	**TP-117**				**Drum**				
	15.10-	DJLFS	**★E1N107**	**TP-117**				**Drum**				
	18.08-	DJLAS	**SN210**									
FAMILIA ファミリア												
1300	89.01-99.05	BG3P, 3S, BHA3P, 3S	**E1N014**	**SP252**				**Drum**				
	98.04-00.09	BJ3P	**E1N003**	**SP104**				**Drum**				

★発売予定

C/ #=Chassis Number

cc	Year	Body Type	Front					Rear				
			Disc Pad	Seal Kit	Caliper		Piston	Disc Pad	Seal Kit	Caliper		Piston
					R	L				R	L	
FAMILIA ファミリア												
1500	89.01-96.01	BG5P, 5S (Rear Drum)	**E1N014**	**SP252**				**Drum**				
	90.11-96.01	BG5P, 5S (Rear Disc)	**E1N014**	**SP252**				**E2N032**	**C-209AP**			
	94.03-99.05	BHALS, BHALP (Rear Drum)	**E1N014**	**SP252**				**Drum**				
	94.03-99.05	BHALS, BHALP (Rear Disc)	**E1N014**	**SP252**				**E2N029**	**TP-85N**			
	94.05-96.10	BHA5S, BHA5P (Rear Drum)	**E1N016**	**SP252**				**Drum**				
	94.05-96.10	BHA5S, BHA5P (Rear Disc)	**E1N016**	**SP252**				**E2N029**	**TP-85N**			
	98.04-03.09	BJ5P (Rear Drum)	**E1N003**	**SP104**				**Drum**				
	98.04-00.09	BJ5P (Rear Disc)	**E1N003**	**SP104**				**E2N043**	**TP-85N**			
	00.09-03.09	BJ5P (RS, LS AT)	**E1N003**	**SP104**				**E2N043**	**TP-85N**			
	00.09-03.09	BJ5P (LS MT)	**E1N003**	**SP104**				**E2N033**	**A-AD35P**			
	00.09-03.09	BJ5P (With Variable valve)	**E1N026**					**E2N043**	**TP-85N**			
	98.04-03.09	BJ5P (4WD)	**E1N026**					**E2N033**	**A-AD35P**			
1600	94.03-98.05	BHA6R	**E1N016**	**SP252**				**E2N029**	**TP-85N**			
1700	94.09-99.05	BHA7P	**E1N016**	**SP252**				**Drum**				
	94.09-98.05	BHA7R (Rear Drum)	**E1N016**	**SP252**				**Drum**				
	94.09-98.05	BHA7R (Rear Disc)	**E1N016**	**SP252**				**E2N029**	**TP-85N**			
1800	94.05-99.05	BHA8P, 8S (Rear Drum)	**E1N016**	**SP252**				**Drum**				
	94.05-99.05	BHA8P, 8S (Rear Disc)	**E1N016**	**SP252**				**E2N029**	**TP-85N**			
2000	98.04-00.10	BJEP	**E1N003**	**SP104**				**Drum**				
	01.12-03.09	BJFP	**E1N026**					**E2N043**	**TP-85N**			
	01.05-03.09	BJ5P改(MAZDA SPEED)	**E1N042**					**E2N043**	**TP-85N**			
FAMILIA (Training Vehicle) ファミリア (教習車)												
1500	94.03-99.05	BHALP (Rear Drum)	**E1N014**	**SP252**				**Drum**				
	94.03-99.05	BHALP (Rear Disc)	**E1N014**	**SP252**				**E2N029**	**TP-85N**			
1700	94.09-99.05	BHA7P	**E1N016**	**SP252**				**Drum**				
FAMILIA S-WAGON ファミリア S-ワゴン												
1500	00.09-03.09	BJ5W (S-F)	**E1N003**	**SP104**				**Drum**				
	00.09-03.09	BJ5W (RS)	**E1N026**					**Drum**				
	00.09-03.09	BJ5W (RS-S)	**E1N026**					**E2N043**	**TP-85N**			
	00.09-03.09	BJ5W (S-4)	**E1N026**					**E2N033**	**A-AD35P**			
1800	98.05-00.10	BJ8W	**E1N026**					**E2N033**	**A-AD35P**			
2000	99.06-03.09	BJFW (2WD)	**E1N026**					**E2N043**	**TP-85N**			
	99.06-03.09	BJFW (4WD)	**E1N026**					**E2N033**	**A-AD35P**			
FAMILIA(Van) ファミリア(バン)												
1200	07.01-08.12	BVAY12	**B1N234**	**C-675P**				**Drum**				
	08.12-	BVAY12	**B1N234**	**C-675P**				**Drum**				
1300	85.11-94.08	BF3V (Rear Drum)	**SN240P**	**SP240**				**Drum**				
	85.11-94.08	BF3V (Rear Disc)	**SN240P**	**SP240**				**E2N032**	**A-209P**			
	94.08-97.05	BVY10 (C/ #~513000)	**SN585P**	**TP-13**				**Drum**				
	97.05-99.04	BVY10 (C/ #513001~)	**SN798P**	**C-213AP**				**Drum**				
	99.05-07.01	BVY11	**B1N037**	**TP-81**				**Drum**				
1500	85.11-94.08	BF5V (Rear Drum)	**SN240P**	**SP240**				**Drum**				
	85.11-94.08	BF5V (Rear Disc)	**SN240P**	**SP240**				**E2N032**	**A-209P**			
	94.08-97.05	BMVFY10	**SN585P**	**TP-13**				**Drum**				
	94.08-97.05	BVFY10 (C/ #~513001)	**SN585P**	**TP-13**				**Drum**				
	97.05-99.04	BVFY10 (C/ #513001~)	**SN798P**	**C-213AP**				**Drum**				
	94.08-99.04	BVFY10 (ABS) , VFNY10	**SN798P**	**C-213AP**				**Drum**				
	99.05-08.12	BVFY11	**B1N037**	**TP-81**				**Drum**				
	07.01-08.12	BVY12	**B1N234**	**C-675P**				**Drum**				

C/ #=Chassis Number

MAZDA

cc	Year	Body Type	Front					Rear				
			Disc Pad	Seal Kit	Caliper		Piston	Disc Pad	Seal Kit	Caliper		Piston
					R	L				R	L	
FAMILIA(Van) ファミリア(バン)												
	08.12-	BVY12	**B1N234**	**C-675P**				**Drum**				
	18.06-	NCP160M, NCP165M										
1600	08.12-	BVZNY12	**B1N234**	**C-675P**				**Drum**				
1700	84.08-97.05	BVSY10	**SN585P**	**TP-13**				**Drum**				
	94.08-97.05	BVSY10 , BVSNY10	**SN798P**	**C-213AP**				**Drum**				
1800	99.05-08.12	BVHNY11	**B1N037**	**TP-81**				**Drum**				
	04.05-08.12	BVGY11(CNG)	**B1N037**	**TP-81**				**Drum**				
	07.01-08.12	BVJY12	**B1N234**	**C-675P**				**Drum**				
	08.12-	BVJY12	**B1N234**	**C-675P**				**Drum**				
2000	97.05-99.04	BVEY10, BVENY10	**SN798P**	**C-213AP**				**Drum**				
2200	99.05-04.05	BVEY11, BVENY11	**B1N037**	**TP-81**				**Drum**				
FAMILIA (Wagon) ファミリア (ワゴン)												
1300	89.10-94.08	BW3W	**SN240P**	**SP240**				**Drum**				
1500	89.10-94.08	BW5W	**SN240P**	**SP240**				**Drum**				
	94.08-96.05	BWFY10 (C/ #～508000)	**SN585P**	**TP-13**				**Drum**				
	94.08-96.05	BWFY10 (ABS) (C/ #～508000)	**SN798P**	**C-213AP**				**Drum**				
	94.08-96.05	BWFNY10(C/ #～508000)	**SN798P**	**C-213AP**				**Drum**				
	96.05-99.04	BWFY10, WFNY10(C/ #508001～)	**B1N237**	**TP-81**				**Drum**				
	99.05-99.12	BWFY11	**B1N037**	**TP-81**				**Drum**				
1600	87.03-94.08	BWMR	**SN240P**	**SP240**				**E2N032**	**A-209P**			
1700	89.10-94.08	BW7W	**SN240P**	**SP240**				**Drum**				
1800	96.05-99.04	BWHY10, BWHNY10	**B1N237**	**TP-81**				**Drum**				
	99.05-99.12	BWHNY11	**B1N037**	**TP-81**				**Drum**				
2000	94.08-96.05	BWEY10 (C/ #～508000)	**SN585P**	**TP-13**				**Drum**				
	94.08-96.05	BWEY10 (ABS) (C/ #～508000)	**SN798P**	**C-213AP**				**Drum**				
	96.05-99.04	BWEY10(C/ #508001～)	**B1N237**	**TP-81**				**Drum**				
FESTIVA フェスティバ												
1300	92.11-97.10	D23PF (M/ T)	**E1N014**	**SP252**				**Drum**				
	92.11-97.10	D23PF (A/ T)	**E1N014**	**SP282**				**Drum**				
1500	92.11-97.10	D25PF	**E1N014**	**SP252**				**Drum**				
FESTIVA MINI WAGON フェスティバ ミニワゴン												
1300	96.07-01.08	DW3WF	**E1N014**	**SP282**				**Drum**				
1500	96.07-01.08	DW5WF	**E1N014**	**SP282**				**Drum**				
FRAIR/ FRAIR WAGON フレア/ フレアワゴン												
660	12.06-	MM21S	**SN935**									
	12.10-	MJ34S	**H1N052**	**TP-80**								
	13.04-	MM32S	**H1N052**	**TP-80**								
	14.08-	MJ44S	**H1N052**	**TP-80**								
	15.05-	MM42S	**H1N052**	**TP-80**								
	17.02-	MJ55S		**TP-80**								
	18.01-	MM53S										
FREDA フリーダ												
2000	95.06-02.10	SGEWF, SGE3F	**E1N021**	**SP281**				**SN657P**	**A-344P**			
2500	95.06-02.10	SGLWF, SGL3F, SGL5F, SGLRF, SG5WF	**E1N021**	**SP281**				**SN657P**	**A-344P**			
IXION イクシオン												
1800	99.04-03.01	CP8WF (2WD)	**E1N026**					**Drum**				
	99.04-03.01	CP8WF (4WD)	**E1N026**					**E2N033**	**A-AD35P**			
J100 (Truck) J100 (トラック)												
2000	87.09-93.09	SDEATF (Front Drum)						**Drum**				

C/ #=Chassis Number

cc	Year	Body Type	Front					Rear				
			Disc Pad	Seal Kit	Caliper		Piston	Disc Pad	Seal Kit	Caliper		Piston
					R	L				R	L	
J100 (Truck) J100 (トラック)												
	93.09-97.05	SDEATF (Front Disc)	**E1N009**	**SP236**				**Drum**				
2200	87.09-93.09	SD2ATF (Front Drum)						**Drum**				
	93.09-97.05	SD2ATF (Front Disc) , SD29MF	**E1N009**	**SP236**				**Drum**				
2500	97.04-99.06	SD5ATF	**E1N009**	**SP236**				**Drum**				
J100 (Van) J100 (バン)												
2000	87.09-93.09	SREAVF (Front Drum)						**Drum**				
	93.09-97.05	SREAVF (Front Disc)	**E1N009**	**SP236**				**Drum**				
2200	87.09-92.12	SR2AVF	**E1N009**	**SP236**				**Drum**				
	87.09-93.09	SR2AMF (Front Drum)						**Drum**				
	93.09-97.05	SR2AMF (Front Disc)	**E1N009**	**SP236**				**Drum**				
2500	97.04-99.06	SR5AMF, 5AVF	**E1N009**	**SP236**				**Drum**				
3000	92.02-97.05	SRSAVF	**E1N009**	**SP236**				**Drum**				
LANTIS ランティス												
1800	93.06-97.06	CBA8P	**E1N016**	**SP252**				**E2N029**				
2000	93.06-97.06	CBAEP	**SN272**	**SP276**				**E2N029**				
LAPUTA ラピュタ												
660	99.03-01.03	HP11S, 21S	**H1N009**	**TP-80**				**Drum**				
	01.04-01.10	HP12S	**H1N009**	**TP-80**				**Drum**				
	01.04-05.12	HP22S (STurbo)	**H1N009**	**TP-80**				**C2N022**	**TP-91**			
	01.04-05.12	HP22S (XTurbo)	**H1N009**	**TP-80**				**Drum**				
	01.04-04.12	HP22S	**H1N009**	**TP-80**				**Drum**				
	04.12-05.12	HP22S	**SN935**	**TP-80**				**Drum**				
LASER レーザー												
1300	96.08-98.10	BHA3PF	**E1N014**	**SP252**				**E2N029**	**TP-85N**			
1500	94.04-98.10	BHALPF, BHALSF	**E1N014**	**SP252**				**E2N029**	**TP-85N**			
	94.04-96.09	BHA5PF, 5SF	**E1N016**	**SP252**				**E2N029**	**TP-85N**			
1600	94.09-98.10	BHA6RF	**E1N016**	**SP252**				**E2N029**	**TP-85N**			
1700	94.09-98.05	BHA7RF, 7PF (Rear Drum)	**E1N016**	**SP252**				**Drum**				
	94.09-98.05	BHA7RF, 7PF (Rear Disc)	**E1N016**	**SP252**				**E2N029**	**TP-85N**			
1800	94.04-98.10	BHA8SF, 8PF (Rear Drum)	**E1N016**	**SP252**				**Drum**				
	94.04-98.10	BHA8SF (Rear Disc)	**E1N016**	**SP252**				**E2N029**	**TP-85N**			
LASER RIDEA レーザー リデア												
1300	98.11-00.12	BJ3PF	**E1N003**	**SP104**				**Drum**				
1500	98.11-00.12	BJ5PF, 5WF (2WD)	**E1N003**	**SP104**				**Drum**				
	98.11-00.12	BJ5PF, 5WF (4WD)	**E1N026**					**E2N033**	**A-AD35P**			
1800	98.11-00.12	BJ8WF	**E1N026**					**E2N033**	**A-AD35P**			
2000	98.11-00.12	BJEPF	**E1N003**	**SP104**				**Drum**				
MILLENIA/ EUNOS 800 ミレーニア/ ユーノス 800												
2000	98.06-02.10	TAFP	**E1N038**	**A-423P**				**SN847**	**A-424P**			
2300	93.08-00.07	TA3A, 3P, 3Y, 3Z	**E1N038**	**A-423P**				**SN847**	**A-424P**			
2500	93.08-03.08	TA5A, 5P, 5Y, 5Z	**E1N038**	**A-423P**				**SN847**	**A-424P**			
MPV												
2000	99.05-02.04	LWEW	**E1N004**	**SP281**			E9N003	**Drum**				
2300	02.04-06.01	LW3W (B, G)	**E1N004**	**SP281**			E9N003	**Drum**				
	02.04-06.01	LW3W	**E1N004**	**SP281**			E9N003	**E2N048**				
	06.02-	LY3P	**E1N053**	**SP401**				**SN586**				
2500	95.10-99.05	LVLR, LVLW, LV5W	**E1N021**	**SP281**				**SN657P**	**A-344P**			
	99.05-02.04	LW5W	**E1N004**	**SP281**				**Drum**				
3000	89.11-91.08	LVEW(C/ #~200000)	**E1N018**	**SP275**				**Drum**				

C/ #=Chassis Number

MAZDA

cc	Year	Body Type	Front					Rear				
			Disc Pad	Seal Kit	Caliper		Piston	Disc Pad	Seal Kit	Caliper		Piston
					R	L				R	L	
MPV												
	91.08-95.10	LVEW (Rear Drum) (C/ #200001~)	**SN281P**	**SP281**				**Drum**				
	91.08-99.05	LVEW (Rear Disc) (C/ #200001~)	**E1N021**	**SP281**				**SN657P**	**A-344P**			
	02.04-06.01	LWFW	**E1N004**	**SP281**				**E2N048**				
MS-8												
2000	92.01-97.06	MBEP	**E1N026**					**SN656**				
	97.06-98.02	MBEP	**E1N026**					**SN656**	**TP-85N**			
2500	92.01-97.01	MB5A, 5P	**E1N026**					**SN656**				
	97.06-98.02	MB5A, 5P	**E1N026**					**SN656**	**TP-85N**			
PREMACY プレマシー												
1800	99.02-05.01	CP8W (2WD)	**E1N026**					**Drum**				
	99.02-05.01	CP8W (4WD)	**E1N026**					**E2N033**	**A-AD35P**			
2000	01.06-05.01	CPEW	**E1N026**					**E2N033**	**A-AD35P**			
	05.02-	CREW	**SN918**					**E2N065**				
	10.07-	CWEFW, CWEAW	**SN918**					**E2N065**				
	13.01-	CWFFW	**SN918**					**E2N065**				
2300	05.02-	CR3W	**SN918**					**E2N065**				
PROBE プローブ												
2500	92.09-97.12	CT22B	**E1N026**					**SN656**	**A-AD35P**			
PROCEED LEVANTE プロシードレバンテ												
2000	95.01-99.09	TF11W, 31W, 51W, TJ11W, 31W, 32W	**H1N001**	**SP291**				**Drum**				
	97.11-99.09	TF52W, TJ52W	**H1N059**	**TP-71**				**Drum**				
2500	96.10-99.09	TJ61W, 62W	**H1N001**	**SP291**				**Drum**				
PROCEED/ PROCEED MARVIE プロシード/ プロシード マービー												
2500	96.02-99.02	UV56R, UVL6R	**E1N038**					**Drum**				
2600	96.02-99.02	UF66M	**E1N038**					**Drum**				
REVUE レビュー												
1300	90.08-99.02	DB3PA	**E1N014**	**SP282**				**Drum**				
1500	90.08-99.02	DB5PA	**E1N014**	**SP282**				**Drum**				
RX-7												
Rotary	91.10-02.08	FD3S	**E1N019**	**SP242**			E9N001	**E2N033**	**A-219P+ A-219BP**			
	98.12-02.08	FD3S (17inch)	**E1N019**	**SP227**				**E2N033**	**A-219P+ A-219BP**			
RX-8												
Rotary	03.02-	SE3P	**E1N006**	**SP104**				**SN433P**	**TP-101**			
ROADSTER ロードスター												
1600	97.12-00.06	NB6C	**E1N022**	**SP285**	E5R003 ※1	E5L003 ※1	D9N006	**E2N030**	**TP-86N**			
	00.06-05.08	NB6C (Normal sus)	**E1N022**	**SP285**	E5R003 ※1	E5L003 ※1	D9N006	**E2N030**	**TP-86N**			
	00.06-05.08	NB6C (Hard sus)	**E1N054**	**SP104**				**SN952P**				
1800	93.08-98.05	NA8C	**E1N022**	**SP285**	E5R003 ※1	E5L003 ※1	D9N006	**E2N030**	**TP-86N**			
	98.05-00.06	NA8C	**E1N022**	**SP285**	E5R003 ※1	E5L003 ※1	D9N006	**E2N030**	**TP-86N**			
	97.12-00.06	NB8C	**E1N022**	**SP285**	E5R003 ※1	E5L003 ※1	D9N006	**E2N030**	**TP-86N**			
	00.06-05.08	NB8C(Normal sus)	**E1N022**	**SP285**	E5R003	E5L003	D9N006	**E2N030**	**TP-86N**			
	00.06-05.08	NB8C(Hard sus)	**E1N054**	**SP104**				**SN952P**				

C/ #=Chassis Number
※1 E5R003/ E5L003:Without Mounting

cc	Year	Body Type	Front					Rear				
			Disc Pad	Seal Kit	Caliper		Piston	Disc Pad	Seal Kit	Caliper		Piston
					R	L				R	L	
ROADSTER ロードスター												
2000	05.08-	NCEC		**SP104**								
SCRUM (Van/ Wagon/ Truck) スクラム (バン/ ワゴン/ トラック)												
660	91.09-98.10	DJ51B, 51T, DK51B, 51T, DL51V, DM51V	**H1N006**	**MP-40**				**Drum**				
	99.01-01.11	DG52T, 52V, DH52T, 52V, 52W	**SN674**	**MP-91**				**Drum**				
	01.09-05.09	DG62V, 62W	**SN674**	**MP-91**				**Drum**				
	02.05-05.09	DG63T	**H1N009**	**MP-80**				**Drum**				
	05.09-	DG64V, 64W, 63T	**SN946**	**MP-80**				**Drum**				
	13.09-	DG16T	**H1N053**	**TP-80**				**Drum**				
	15.03-	DG17V, DG17W	**H1N053**	**TP-80**				**Drum**				
SENTIA/ MS-9 センティア/ MS-9												
2500	91.03-96.01	HD5S, 5P		**A-367P**				**SN657P**	**A-344P**			
3000	91.03-00.09	HDES, HDEP, HEEA, HEEP		**A-367P**				**SN657P**	**A-344P**			
SPECTRON (Wagon) スペクトロン (ワゴン)												
2000	86.11-97.10	SSE8RF, 8WF, SSF8RF, 8WF	**E1N009**	**SP236**				**Drum**				
SPECTRON/ J80 (Van) スペクトロン/ J80 (バン)												
1500	90.07-95.09	SS58VF	**E1N009**	**SP236**				**Drum**				
1800	95.08-99.05	SS88VF, 88HF	**E1N009**	**SP236**				**Drum**				
2000	83.09-95.08	SSF8VF	**E1N009**	**SP236**				**Drum**				
2200	86.11-99.05	SS28MF	**E1N009**	**SP236**				**Drum**				
	93.08-99.05	SS28VF, 28HF	**E1N009**	**SP236**				**Drum**				
SPECTRON/ J80 (Truck) スペクトロン/ J80 (トラック)												
1500	90.07-93.09	SE58TF (C/ #~200000)						**Drum**				
	93.09-95.09	SE58TF (C/ #200001~)	**E1N009**	**SP236**				**Drum**				
1800	95.08-99.05	SE88TF	**E1N009**	**SP236**				**Drum**				
2000	87.09-93.08	SEF8TF						**Drum**				
2200	93.09-99.05	SE28TF, SS28MF	**E1N009**	**SP236**				**Drum**				
SPIANO スピアーノ												
660	02.02-05.02	HF21S	**H1N009**	**TP-80**				**Drum**				
	05.02-05.12	HF21S	**SN935**	**TP-80**				**Drum**				
	05.02-05.12	HF21S (Turbo)	**H1N009**	**TP-80**				**Drum**				
	05.12-08.09	HF21S	**SN935**	**TP-80**				**Drum**				
TELSTAR テルスター												
1800	97.06-99.08	GF8PF	**E1N026**					**Drum**				
2000	91.10-99.08	GEEPF, GEFPF, GFEPF, GFFPF	**E1N026**					**SN656**				
	91.11-94.07	GESRF	**E1N026**					**E2N033**	**C-219P**			
	97.06-99.08	GFERF	**E1N026**					**E2N033**	**A-AD35P**			
2500	92.04-96.01	GE5PF	**E1N026**					**SN656**				
TELSTAR Ⅱ テルスターⅡ												
1800	94.07-97.06	CG2PPF	**E1N026**					**Drum**				
	94.07-97.06	CG2PPF (ABS)	**E1N026**					**SN656**				
2000	94.07-97.06	CG2SPF	**E1N026**					**SN656**				
	94.07-97.06	CG2SRF	**E1N026**					**E2N033**	**C-219P**			
TELSTAR (Wagon) テルスター (ワゴン)												
1800	92.07-97.10	GV8WF	**E1N035**	**A-249P**				**SN785**	**A-250P**			
	97.10-99.08	GW8WF	**E1N026**					**Drum**				
2000	90.07-97.10	GW8WF	**E1N035**	**A-249P**				**SN785**	**A-250P**			
	90.07-92.07	GW8WF	**E1N035**	**A-249P**				**SN785**	**A-250P**			
	92.07-97.10	GW8WF	**E1N035**	**A-249P**				**E2N033**	**C-219P**			
	92.07-97.10	GW8WF	**SN848P**	**A-454P**				**E2N033**	**C-219P**			

C/ #=Chassis Number

MAZDA

cc	Year	Body Type	Front					Rear				
			Disc Pad	Seal Kit	Caliper		Piston	Disc Pad	Seal Kit	Caliper		Piston
					R	L				R	L	
TELSTAR (Wagon) テルスター (ワゴン)												
	92.07-97.10	GW8WF	**SN848P**	**A-454P**				**E2N033**	**C-219P**			
	96.06-97.10	GW8WF	**E1N035**	**A-249P**				**SN785**	**A-250P**			
	97.10-99.08	GWEWF	**E1N026**					**E2N033**	**A-AD35P**			
	97.10-99.08	GWERF, GWFWF	**E1N042**					**E2N033**	**A-AD35P**			
2500	97.11-99.08	GW5RF	**E1N042**					**E2N033**	**A-AD35P**			
TITAN 2000 タイタン 2000												
2000	00.09-10.07	SYE4T, SYF4T, SYF4L(Normal Body 1.0t, 1.25t)	**E1N021**	**SP281**				**Drum**				
	00.09-10.07	SYE4T, SYF4T(Normal Body1.35t)	**SN116**	**SP281**				**Drum**				
	00.09-10.07	SYE6T, SYF6T、SYF6L(Long body)	**E1N021**	**SP281**				**Drum**				
TITAN 2500 タイタン 2500												
2500	00.09-04.08	SY54T (1.0t) SY54L, 56T, 56L	**E1N021**	**SP281**				**Drum**				
	00.09-04.08	SY54T (1.35t)	**SN116**	**SP281**				**Drum**				
TITAN 3000 タイタン 3000												
3000	89.05-02.06	WGFAD, WGSAT, WHS5T(Front Drum)						**Drum**				
	99.04-04.06	WGSAT, WHS5T(Front Disc)	**J1N018**	**C-617P**				**Drum**				
		LLR85/ LMR85 (Middle S Cab)										
	07.02-	Front Drum						**Drum**				
	07.02-	Withou Independent Suspending	**J1N018**	**C-617AP**				**Drum**				
	07.02-	Independent Suspending (Under GVW=5.0t)	**SN932**	**A-721P**				**Drum**				
	07.02-	Independent Suspending (Over GVW=5.0t) 2.0t Garbage chassis	**J1N018**	**C-617AP**				**Drum**				
	07.02-	Independent Suspending (Over GVW=5.0t)	**SN932**	**A-721P**				**Drum**				
	07.02-	Independent Suspending (Over GVW=5.0t) 2. 95t, 3.0t	**J1N018**	**C-617AP**				**Drum**				
		LLR85/ LMR85 (Middle W Cab)										
	07.02-	Front Drum						**Drum**				
	07.02-	Without Independent Suspending	**J1N018**	**C-617AP**				**Drum**				
	07.02-	Independent Suspending (Under GVW=5.0t)	**SN932**	**A-721P**				**Drum**				
	07.02-08.01	Independent Suspending (Over GVW=5.0t) 2.0t, With TPOFly Wheel	**J1N018**	**C-617AP**				**Drum**				
	07.02-	Independent Suspending (Over GVW=5.0t) 2.0t	**SN932**	**A-721P**				**Drum**				
	08.01-	Independent Suspending (Over GVW=5.0t) 2.0t, Fire Enginechassis	**J1N018**	**C-617AP**				**Drum**				
	08.01-	Independent Suspending (Over GVW=5.0t) 2.0t, TPOFly Whee,	**J1N018**	**C-617AP**				**Drum**				
	07.02-	Independent Suspending (Over GVW=5.0t) 3.0t	**J1N018**	**C-617AP**				**Drum**				
		LLS85/ LMS85 (Middle S/ W Cab)										
	07.02-09.05	S Cab	**SN932**	**A-721P**				**Drum**				
	09.05-	S Cab (Under GVW=5.0t)	**SN932**	**A-721P**				**Drum**				
	09.05-	S Cab (Over GVW=5.0t)	**SN932**	**A-721P**				**Drum**				
	09.05-	S Cab (Over GVW=5.0t) High work car chassis	**J1N018**	**C-617AP**				**Drum**				
	07.02-	W Cab (Under GVW=5.0t)	**SN932**	**A-721P**				**Drum**				
	07.02-08.01	W Cab (Over GVW=5.0t)	**SN932**	**A-721P**				**Drum**				
	07.02-08.01	W Cab (Over GVW=5.0t) PTOFly Wheel	**J1N018**	**C-617AP**				**Drum**				
		LLS85/ LMS85 (Middle S/ W Cab)										
	08.01-	W Cab (Over GVW=5.0t) Fire Engine	**J1N018**	**C-617AP**				**Drum**				
	08.01-	W Cab (Over GVW=5.0t) Fire Engine chassis	**J1N018**	**C-617AP**				**Drum**				
	08.01-	W Cab Fire Engine chassis	**SN932**	**A-721P**				**Drum**				
		LNR85/ LPR85 (Wide S/ W Cab)										

GVW=Gross Vehicle Weight

cc	Year	Body Type	Front					Rear				
			Disc Pad	Seal Kit	Caliper		Piston	Disc Pad	Seal Kit	Caliper		Piston
					R	L				R	L	
TITAN 3000 タイタン 3000												
	07.02-	Front Drum						**Drum**				
	07.02-09.05	(S Cab) Without Hydraulic brake assist	**J1N018**	**C-617AP**				**Drum**				
	09.05-	(S Cab) Without Hydraulic brake assist(Over GVW=5.0t)	**J1N018**	**C-617AP**				**Drum**				
	07.02-	(S Cab) With Hydraulic brake assist(Over GVW= 5.0t)	**SN904**	**A-656P**				**Drum**				
	09.05-	(S Cab) (Under GVW=5.0t)	**J1N018**	**C-617AP**				**Drum**				
	07.02-	W Cab	**J1N018**	**C-617AP**				**Drum**				
		LNS85/ LPS85 (Wide S Cab)										
	07.02-09.05	All	**J1N018**	**C-617AP**				**Drum**				
	09.05-	With Hydraulic brake assist(Over GVW=5.0t)	**SN904**	**A-656P**				**Drum**				
	09.05-	Without Hydraulic brake assist(Over GVW=5.0t)	**J1N018**	**C-617AP**				**Drum**				
	09.05-	Under GVW=5.0t	**J1N018**	**C-617AP**				**Drum**				
		LJR85/ LKR85 (Normal S/ W Cab)										
	07.02-	Front Drum						**Drum**				
	07.02-	S Cab Without Independent Suspending	**J1N018**	**C-617AP**				**Drum**				
	07.02-	S Cab (Under GVW=5.0)	**SN932**	**A-721P**				**Drum**				
	07.02-	S Cab 2.0t, Independent Suspending (Over GVW =5.0) (Without Dump chassis, Vacuum Truck, or Without garbage Truck, WithoutPTOfly wheel, Without high work car chassis)	**SN932**	**A-721P**				**Drum**				
	07.02-	S Cab 2.0t, Independent Suspending (Over GVW =5.0) (Dump chassis, Vacuum Truck, or garbage Truck, PTOfly wheel, high work car chassis)	**J1N018**	**C-617AP**				**Drum**				
	07.02-	S Cab 2.95t, 3.0t, Independent Suspending (Over GVW=5.0)	**J1N018**	**C-617AP**				**Drum**				
	07.02-	W Cab Independent Suspending	**SN932**	**A-721P**				**Drum**				
	07.08-	W Cab	**J1N018**	**C-617AP**				**Drum**				
		LJS85/ LKS85 (Normal S/ W Cab)										
	07.02-	Independent Suspending (Under GVW=5.0)	**SN932**	**A-721P**				**Drum**				
	07.02-	Independent Suspending (Over GVW=5.0) S Cab, 2.0t	**SN932**	**A-721P**				**Drum**				
	07.02-	Independent Suspending (Over GVW=5.0) S Cab, 2.0t Dump chassis	**J1N018**	**C-617AP**				**Drum**				
		LJS85/ LKS85 (Normal S Cab)										
	07.02-	Independent Suspending (Over GVW=5.0) S Cab, 3.0t	**J1N018**	**C-617AP**				**Drum**				
		LHR85 (Normal S/ W Cab)										
	07.02-	Front Drum						**Drum**				
	07.02-	Without Independent Suspending	**J1N018**	**C-617AP**				**Drum**				
	07.02-	Independent Suspending	**SN932**	**A-721P**				**Drum**				
		LHS85 (Normal S/ W Cab)										
	07.02-	Independent Suspending	**SN932**	**A-721P**				**Drum**				
TITAN 3100 タイタン 3100												
3100	04.07-07.01	LHR69	**SN888**	**A-485P**				**Drum**				
	04.10-07.01	LHS69	**SN836P**	**A-429P**				**Drum**				
TITAN 4000 タイタン 4000												
4000	95.05-99.04	WGEAT (Front Drum)						**Drum**				
	95.05-99.04	WGEAT (Front Disc)	**SN865**					**Drum**				

GVW=Gross Vehicle Weight

MAZDA

cc	Year	Body Type	Front					Rear				
			Disc Pad	Seal Kit	Caliper		Piston	Disc Pad	Seal Kit	Caliper		Piston
					R	L				R	L	
TITAN 4000 タイタン 4000												
	99.04-00.05	WGEAT (Front Disc)	**J1N018**	**C-617P**				**Drum**				
	95.05-00.05	WGE1T, WGEAH, WGEAD, WGFAK, WGEAH (Front Drum)						**Drum**				
	99.04-00.05	WGE4T (Front Drum)						**Drum**				
	99.04-00.05	WGE4T (Front Disc)	**J1N018**	**C-617P**				**Drum**				
	00.04-02.06	WHF3F, WHF3G, WHF5D, WHF5G, WHF5T(Front Drum)						**Drum**				
	00.04-	WHF3F, WHF3G, WHF5D, WHF5G, WHF5T, WH6HH(Front Disc)	**J1N018**	**C-617P**				**Drum**				
TITAN 4300 タイタン 4300												
4300	95.05-00.05	WG31T, WG34T, WG3AD, WG3AD, WG3AN, WG3AH, WGJ4T, WG3AM(Front Drum)						**Drum**				
	95.05-99.04	WG3AT (Front Drum)						**Drum**				
	99.04-00.05	WG3AT (Front Disc)	**J1N018**	**C-617P**				**Drum**				
	99.04-00.05	WG34T	**J1N018**	**C-617P**				**Drum**				
	00.04-04.07	WH3HH, WH38H, WH35D, WH3HD, WH35H, WH35T, WH33G, WH33F(Front Drum)						**Drum**				
	00.04-04.07	WH3HH, WH38H, WH35D, WH3HD, WH35H, WH35T, WH33G, WH33F(Front Disc)	**J1N018**	**C-617P**				**Drum**				
	04.07-	LKR81, LPR81 (CNG Front drum)						**Drum**				
	04.07-	LKR81 (Front Disc)	**J1N018**	**C-617AP**				**Drum**				
	04.07-05.01	LPR81 (CNG, 3.0t) High Floor, Full Flat low	**SN904**	**A-656P**				**Drum**				
	04.07-05.01	LPR81 (CNG, 3.0t) Flat low	**J1N018**	**C-617AP**				**Drum**				
	04.07-	LPR81 (CNG, 2.0t)	**J1N018**	**C-617AP**				**Drum**				
	05.01-	LPR81 (CNG, 3.5t)	**SN904**	**A-656P**				**Drum**				
TITAN 4600 タイタン 4600												
4600	89.04-00.04	WGM7H, WGM4T, WGM4S, WGM7T, WGM4H, WGM1D, WG6AD, WG6AF, WG61K, WG64T, WG61D, WGZ4T, WG61T, WG67T, WG61H, WG67H, WG64H(Front Drum)						**Drum**				
	99.04-00.04	WG6AT (Front Drum)						**Drum**				
	99.04-00.04	WG6AT (Front Disc)	**J1N018**	**C-617P**				**Drum**				
	00.04-04.07	WH65T, WH63F, WH68G, WH63G, WH63H, WH65D, WH65G, WH65H, WH6HD, WH6HH, WH68H, WH68K, WH69H, WH69G(Front Drum)						**Drum**				
	00.04-04.07	WH65T, WH63F, WH68G, WH63G, WH63H, WH65D, WH65G, WH65H, WH6HD, WH6HH, WH68H, WH68K, WH69H, WH69G(Front Disc)	**J1N018**	**C-617P**				**Drum**				
	05.05-	LKR, LPR82 (CNGFront Drum)						**Drum**				
	05.05-07.07	LPR82 (CNGFront Disc) (2.0, 2.95t)	**J1N018**	**C-617AP**				**Drum**				
	05.05-07.07	LPR82 (CNGFront Disc) (3.0t)	**SN904**	**A-656P**				**Drum**				
	07.07-	LPR82 (CNG) Hydraulic brake assist	**SN904**	**A-656P**				**Drum**				
	07.07-	LPR82 (CNG)	**J1N018**	**C-617AP**				**Drum**				
	04.07-07.07	LKR81, 82 (CNGFront Disc)	**J1N018**	**C-617AP**				**Drum**				
	07.07-	LKR, LJR, LMR, LLR82 (CNG) Front Drum						**Drum**				
	07.07-	LKR, LJR, LMR, LLR82 (CNG)	**J1N018**	**C-617AP**				**Drum**				
	07.07-	LKR, LJR, LMR, LLR82 (CNG) Independent Suspending(Under GVW 5.0t)	**SN932**	**A-721P**				**Drum**				

GVW=Gross Vehicle Weight

cc	Year	Body Type	Front					Rear				
			Disc Pad	Seal Kit	Caliper		Piston	Disc Pad	Seal Kit	Caliper		Piston
					R	L				R	L	
TITAN 4600 タイタン 4600												
	07.07-	LKR, LJR, LMR, LLR82 (CNG) Independent Suspending(Under GVW 5.0t)	**J1N018**	**C-617AP**				**Drum**				
	04.07-	LKR, LPR81 (LPGFront Drum)						**Drum**				
	04.07-	LKR81 (LPG) S Tire	**SN932**	**A-721P**				**Drum**				
	04.07-	LKR81 (LPG) W Tire	**J1N018**	**C-617P**				**Drum**				
	04.07-	LPR81 (LPGFront Disc) 2.0t	**J1N018**	**C-617AP**				**Drum**				
	05.08-	LPR81 (LPGFront Disc) 2.95t	**J1N018**	**C-617AP**				**Drum**				
	04.07-	LPR81 (LPGFront Disc) 3.0t	**SN904**	**A-656P**				**Drum**				
TITAN 4800 タイタン 4800												
4800	04.07-07.01	LKR81, LPR81 (Front Drum)						**Drum**				
	04.07-07.01	LKR81 (Front Disc) (Low Floor, S Tire)	**SN932**	**A-721P**				**Drum**				
	04.07-07.01	LKR81 (Front Disc) 2.0t(Dump chassis, Garbage Truck or Vacuum Truck PTOFly Wheel)	**J1N018**	**C-617AP**				**Drum**				
	04.07-07.01	LKR81 (Front Disc) 2.0t	**SN932**	**A-721P**				**Drum**				
	04.07-07.01	LKR81 (Front Disc)	**J1N018**	**C-617AP**				**Drum**				
	04.07-07.01	LKR81 (Front Disc) 2.0t(Heavy Duty Dump)	**J1N018**	**C-617AP**				**Drum**				
	04.07-07.01	LKR81 (Front Disc) 3.0t(Independent Suspending, ABS&ASR)	**J1N018**	**C-617AP**				**Drum**				
	04.07-07.01	LKR81 (Front Disc) W Cab(With Low Floor, ABS, ASR)	**SN932**	**A-721P**				**Drum**				
	04.07-07.01	LKR81 (Front Disc) W Cab(Semilong, Without ABS&ASR)	**J1N018**	**C-617AP**				**Drum**				
	04.07-07.01	LPR81N (Front Disc) 3.0t(Independent Suspending, High Floor, Full Flat low)	**SN904**	**A-656P**				**Drum**				
	04.07-07.01	LPR81N (Front Disc) 3.0t(Independent Suspending, Flat low)	**J1N018**	**C-617AP**				**Drum**				
	04.07-07.01	LPR81 (Front Disc) 3.0t, Independent Suspending, ABS&ASR	**J1N018**	**C-617AP**				**Drum**				
	04.07-07.01	LPR81 (Front Disc) ABS&ASR	**J1N018**	**C-617AP**				**Drum**				
	04.07-07.01	LPR81 (Front Disc) 2.0t, Independent Suspending	**J1N018**	**C-617AP**				**Drum**				
	05.07-07.01	LPR81 (Front Disc) 3.5t, Independent Suspending	**J1N018**	**C-617AP**				**Drum**				
	05.08-07.01	LPR81 (Front Disc) , 2.0t, 3.0t Base , Independent Suspending	**J1N018**	**C-617AP**				**Drum**				
TITAN 5200 タイタン 5200												
5200	05.08-07.01	LPR81 (Front Disc) , Independent ABS&ASR	**J1N018**	**C-617AP**				**Drum**				
	04.07-07.01	LPR81 (Front Disc) W Cab	**J1N018**	**C-617AP**				**Drum**				
	05.08-07.01	LPR81 (Front Disc) 3.5t, Independent Suspending	**SN904**	**A-656P**				**Drum**				
	04.07-07.01	LKS, LPS81 (Front Drum)						**Drum**				
	04.07-07.01	LPS81 (Front Disc) (2t)	**J1N018**	**C-617AP**				**Drum**				
	04.07-07.01	LPS81 (Front Disc) (3.5t)	**SN904**	**A-656P**				**Drum**				
	04.07-07.01	LPS81 (Front Disc) , Semi Long Body	**SN904**	**A-656P**				**Drum**				
	04.07-07.01	LKS81 (Front Disc)	**SN836P**	**A-429P**				**Drum**				
	07.02-	LPR75 (Front Drum)						**Drum**				
	07.02-	LPR75	**J1N018**	**C-617AP**				**Drum**				
	07.02-	LPR75 Hydraulic Brake Assist	**SN904**	**A-656P**				**Drum**				
TRIBUTE トリビュート												
2000	00.10-03.12	EPEW	**E1N066**					**Drum**				
2300	03.10-05.10	EP3W	**E1N066**					**Drum**				
3000	00.10-05.10	EPFW	**E1N066**					**Drum**				

GVW=Gross Vehicle Weight

MAZDA

cc	Year	Body Type	Front					Rear				
			Disc Pad	Seal Kit	Caliper		Piston	Disc Pad	Seal Kit	Caliper		Piston
					R	L				R	L	
VERISA ベリーサ												
1500	04.06-	DC5R, 5W	**SN901**					**Drum**				

SPECIFIC INDEX FOR HONDA

CAR NAME	PAGE
ACCORD アコード	94
ACCORD HYBRID アコードハイブリッド	94
ACCORD COUPE アコード クーペ	94
ACCORD/ TORNEO アコード/ トルネオ	94
ACCORD TOURER アコード ツアラー	94
ACCORD WAGON アコード ワゴン	94
ACTY TRUCK アクティ トラック	94
ACTY VAN/ STREET アクティ バン/ ストリート	94
AIRWAVE エアウェイブ	94
ASCOT アスコット	94
ASCOT INNOVA アスコット イノーバー	95
AVANCIER アヴァンシア	95
BEAT ビート	95
CAPA キャパ	95
CITY シティ	95
CIVIC シビック	95
CIVIC FERIO シビック フェリオ	96
CROSS ROAD クロスロード	96
CR-V	96
CR-X	97
CR-Z	97
DOMANI ドマーニ	97
EDIX エディックス	97
ELEMENT エレメント	97
ELYSION エリシオン	97
FIT/ FIT ARIA フィット/ フィット アリア	97
FIT HYBRID フィット HV	98
FIT SHUTTLE フィット シャトル	98
FREED フリード	98
FREED/ FREEDPLUS フリード/ フリードプラス	98
FREEDSPIKE フリード スパイク	98
FREED HYBRID フリード HV	98
GRACE グレイス	98
HORIZON ホライゾン	98
HR-V	98
INSIGHT インサイト	98
INSPIRE/ SABER インスパイア/ セイバー	98

CAR NAME	PAGE
INTEGRA インテグラ	98
JAZZ ジャズ	99
JADE ジェイド	99
LAGREAT ラグレイト	99
LEGEND レジェンド	99
LIFE ライフ	99
LOGO ロゴ	99
MDX	100
MOBILIO/ MOBILIO SPIKE モビリオ/ モビリオ スパイク	100
N BOX	100
N BOX+	100
N-ONE	100
N VAN	100
N WGN	100
NSX	100
N WGN Nワゴン	100
ODYSSEY オデッセイ	100
ODYSSEY HYBRID オデッセイ ハイブリッド	100
ORTHIA オルティア	100
PARTNER パートナー	100
RAFAGA ラファーガ	101
PRELUDE プレリュード	101
S-MX	101
STEP WGN ステップ ワゴン	101
STEP WGN SPADA ステップ ワゴン スパーダ	101
STREAM ストリーム	101
S660	101
S2000	101
THAT'S ザッツ	101
TODAY トゥディ	101
VAMOS バモス	101
VAMOS HOBIO バモス ホビオ	101
VEZEL ヴェゼル	102
VIGOR ビガー	102
Z	102
ZEST/ ZEST SPARK ゼスト/ ゼストスパーク	102

HONDA

cc	Year	Body Type	Front					Rear				
			Disc Pad	Seal Kit	Caliper		Piston	Disc Pad	Seal Kit	Caliper		Piston
					R	L				R	L	
ACCORD アコード												
1800	89.09-97.09	CB1, CD3 (Rear Drum)	**SN418P**	**TP-53**				**Drum**				
	89.09-97.09	CB1, CD3, CB2 (Rear Disc)	**SN418P**	**TP-53**				**C2N015**	**TP-54**			
2000	89.09-97.09	CB3, CD4 (Rear Drum)	**SN418P**	**TP-53**				**Drum**				
	89.09-97.09	CB3, 4, CD4 (Rear Disc)	**SN418P**	**TP-53**				**C2N015**	**TP-54**			
	01-	CL7(UK)	**C1N083**									
	02.10-08.11	CL7 (EURO-R)	**C1N026**	**TP-53**				**C2N015**	**TP-54**			
	02.10-08.11	CL7 , CL8	**SN435P**	**TP-53**				**C2N015**	**TP-54**			
2200	93.09-97.09	CD5 (Rear Drum)	**SN418P**	**TP-53**				**Drum**				
	93.09-97.09	CD5 (Rear Disc)	**SN418P**	**TP-53**				**C2N015**	**TP-54**			
	93.09-97.09	CD6	**C1N018**	**TP-53**				**C2N015**	**TP-54**			
2400	02.10-08.11	CL9	**C1N026**	**TP-53**				**C2N015**	**TP-54**			
	11.02-	CU1	**C1N026**	**TP-53**								
	08.12-13.03	CU2	**C1N026**	**TP-53**					**TP-64**			
	08.12-	CU2(Type-S)		**A-778**				**SN598P**				
	20.13.06-	CR5.6							**TP-64**			
ACCORD HYBRID アコードハイブリッド												
2000	13.06-	CR5, CR6	**SN213P**					**SN598P**				
	16.04-	CR7	**SN213P**					**★C2N139**				
ACCORD COUPE アコード クーペ												
2000	90.04-94.02	CB6	**SN418P**	**TP-53**				**C2N015**	**TP-54**			
2200	90.04-94.02	CB7	**SN418P**	**TP-53**				**C2N015**	**TP-54**			
	94.02-96.12	CD7	**C1N034**	**A-455P**				**C2N015**	**TP-54**			
	94.02-96.12	CD8	**C1N018**	**TP-53**				**C2N015**	**TP-54**			
ACCORD/TORNEO アコード/ トルネオ												
1800	97.09-02.10	CF3	**SN430P**	**TP-90**				**C2N015**	**TP-54**			
2000	97.09-02.10	CF4, 5, CL3	**C1N018**	**TP-53**				**C2N015**	**TP-54**			
2200	00.06-02.10	CL1 (EURO-R)	**C1N026**	**TP-53**				**C2N015**	**TP-54**			
ACCORD TOURER アコード ツアラー												
2400	08.12-	CW1.2	**C1N026**	**TP-53**								
	08.12-	CW2(Type-S)		**A-778P**				**SN598P**	**TP-64**			
ACCORD WAGON アコード ワゴン												
2000	04.10-08.12	CM1	**SN435P**	**TP-53**				**C2N021**	**TP-64**			
2200	91.04-94.02	CB9	**SN418P**	**TP-53**				**C2N015**	**TP-54**			
	94.02-97.09	CE1	**C1N034**	**A-455P**				**C2N015**	**TP-54**			
	96.09-97.09	CF2	**C1N018**	**TP-53**				**C2N015**	**TP-74**			
2300	97.10-02.10	CF6, 7, CH9, CL2	**C1N018**	**TP-53**				**C2N015**	**TP-54**			
2400	02.11-08.12	CM2 (24T, TypeS) CM3 (24T)	**C1N026**	**TP-53**				**C2N021**	**TP-64**			
	02.11-08.12	CM2 (24E, 24EL) , CM3 (24E, 24EL)	**SN435P**	**TP-53**				**C2N021**	**TP-64**			
ACTY TRUCK アクティ トラック												
660	90.02-99.07	HA3, 4, 5	**SN414**	**TP-27**				**Drum**				
	99.05-	HA6, 7	**SN569P**	**TP-89**				**Drum**				
	09.12-	HA8, 9	**SN569P**	**TP-89**				**Drum**				
ACTY VAN/ STREET アクティ バン/ ストリート												
660	90.02-99.06	HH3, 4	**SN414**	**TP-27**				**Drum**				
	99.06-	HH5, 6, 8, 9	**SN569P**	**TP-89**				**Drum**				
AIRWAVE エアウェイブ												
1500	05.04-10.08	GJ1, 2	**C1N016**	**TP-68**				**Drum**				
ASCOT アスコット												
1800	89.09-93.10	CB1 (Rear Drum)	**SN418P**	**TP-53**				**Drum**				

★発売予定

cc	Year	Body Type	Front					Rear				
			Disc Pad	Seal Kit	Caliper		Piston	Disc Pad	Seal Kit	Caliper		Piston
					R	L				R	L	
ASCOT アスコット												
	89.09-93.10	CB1 (Rear Disc)	**SN418P**	**TP-53**				**C2N015**	**TP-54**			
2000	89.09-93.10	CB2	**SN418P**	**TP-53**				**C2N015**	**TP-54**			
	89.09-93.10	CB3 (Rear Drum)	**SN418P**	**TP-53**				**Drum**				
	89.09-93.10	CB3, 4 (Rear Disc)	**SN418P**	**TP-53**				**C2N015**	**TP-54**			
	93.10-98.03	CE4	**SN418P**	**TP-53**				**Drum**				
	93.10-98.03	CE4 (ABS)	**SN418P**	**TP-53**				**C2N015**	**TP-54**			
2500	93.10-98.03	CE5	**C1N018**	**TP-53**				**C2N015**	**TP-54**			
ASCOT INNOVA アスコット イノーバー												
2000	92.02-97.09	CB3 (Rear Drum)	**SN418P**	**TP-53**				**Drum**				
	92.02-97.09	CB3, 4 (Rear Disc)	**SN418P**	**TP-53**				**C2N015**	**TP-54**			
2300	92.02-97.09	CC4, 5	**SN418P**	**TP-53**				**C2N015**	**TP-54**			
AVANCIER アヴァンシア												
2300	99.09-03.07	TA1	**C1N018**	**TP-53**				**C2N021**	**TP-64**			
	99.09-03.07	TA2	**C1N026**	**TP-53**				**C2N021**	**TP-64**			
3000	99.09-03.07	TA3	**C1N018**	**TP-53**				**C2N021**	**TP-64**			
	00.02-03.07	TA4	**C1N026**	**TP-53**				**C2N021**	**TP-64**			
BEAT ビート												
660	91.03-97.02	PP1	**SN422**	**TP-27**				**C2N022**	**TP-54**			
CAPA キャパ												
1500	98.04-01.12	GA4, 6	**C1N020**	**TP-67**				**Drum**				
CITY シティ												
1200	88.08-94.06	GA1	**SN414**	**TP-27**				**Drum**				
1300	88.08-94.06	GA2	**C1N004**	**TP-27**				**Drum**				
CIVIC シビック												
1300	89.08-92.10	EF1	**C1N004**	**TP-27**				**Drum**				
	87.06-92.10	EY2	**C1N004**	**TP-27**				**Drum**				
	92.10-97.02	EY2	**C1N020**	**TP-67**				**Drum**				
	91.09-95.09	EG3	**SN424P**	**TP-27**				**Drum**				
	95.09-00.09	EK2	**SN424P**	**TP-27**				**Drum**				
	95.09-00.09	EK2 (ABS)	**C1N020**	**TP-67**				**Drum**				
	01.12-05.09	ES9 (HV)	**SN437P**	**TP-68**				**Drum**				
	05.09-	FD3 (Rear Drum) (Hybrid)	**SN437P**	**TP-68**				**Drum**				
	05.09-	FD3 (Rear Disc) (Hybrid)	**SN437P**	**TP-68**				**C2N015**	**TP-54**			
1500	87.06-92.10	EF2	**C1N004**	**TP-27**				**Drum**				
	92.10-97.02	EF2	**SN424P**	**TP-27**				**Drum**				
	92.10-97.02	EY4	**C1N020**	**TP-67**				**Drum**				
	91.09-95.09	EG4 (MX, ETI)	**SN424P**	**TP-27**				**Drum**				
	91.09-95.09	EG4	**C1N020**	**TP-67**				**Drum**				
	91.09-95.09	EG4 (ABS)	**C1N016**	**TP-68**				**C2N022**	**TP-34**			
	95.09-00.09	EK3	**SN424P**	**TP-27**				**Drum**				
	95.09-00.09	EK3 (ABS, VTI)	**C1N020**	**TP-67**				**Drum**				
	00.09-05.09	EU1, 2	**C1N016**	**TP-68**				**Drum**				
	17.09-	FC1	**C1N031**									
	17.09-	FK7	**C1N031**									
1600	87.06-97.02	EF3, 5	**SN410P**	**TP-33**				**Drum**				
	92.10-97.02	EY5	**C1N020**	**TP-67**				**Drum**				
	93.02-96.12	EJ1	**C1N016**	**TP-68**				**Drum**				
	96.01-96.12	EJ7	**C1N036**					**Drum**				
	91.09-95.09	EG5	**C1N020**	**TP-67**				**C2N022**	**TP-34**			

HONDA

cc	Year	Body Type	Front					Rear				
			Disc Pad	Seal Kit	Caliper		Piston	Disc Pad	Seal Kit	Caliper		Piston
					R	L				R	L	
CIVIC シビック												
	91.09-95.09	EG5 (ABS)	**C1N016**	**TP-68**				**C2N022**	**TP-34**			
	91.09-00.09	EG6, EK4	**C1N016**	**TP-68**				**C2N022**	**TP-34**			
	97.08-00.09	EK9	**C1N018**	**TP-53**				**C2N015**	**TP-54**			
	99.02-05.05	EN1	**C1N036**					**Drum**				
1700	00.09-05.09	EU3 (X) , EU4	**C1N016**	**TP-68**				**Drum**				
	02.10-05.09	EU3 (XS)	**C1N016**	**TP-68**				**C2N015**	**TP-54**			
	01.02-05.05	EN2	**C1N035**					**Drum**				
1800	05.09-	FD1	**SN443P**	**TP-92**				**C2N015**	**TP-54**			
2000	01.12-05.09	EP3	**SN434P**	**TP-68**				**C2N015**	**TP-54**			
	06.04-	FD2	**SN443P**	**TP-92**				**C2N015**	**TP-54**			
	07.03-	FD2 (Type R)						**C2N015**	**TP-54**			
CIVIC FERIO シビック フェリオ												
1300	91.07-00.09	EG7, EK2 (MT,)	**SN424P**	**TP-27**				**Drum**	**Drum**			
	91.07-00.09	EG7, EK2 (AT, ABS)	**C1N020**	**TP-67**				**Drum**				
1500	91.07-95.08	EG8 (MT)	**SN424P**	**TP-27**				**Drum**				
	91.07-95.08	EG8 (AT)	**C1N020**	**TP-67**				**Drum**				
	91.07-95.08	EG8	**C1N020**	**TP-67**				**Drum**				
	91.07-95.08	EG8 (ABS)	**C1N016**	**TP-68**				**C2N022**	**TP-34**			
	95.09-00.09	EK3 (MI, ML, VI)	**C1N020**	**TP-67**				**Drum**				
	98.08-00.09	EK3 (VI-RS)	**C1N016**	**TP-68**				**C2N022**	**TP-34**			
	00.09-05.09	ES1	**C1N020**	**TP-67**				**Drum**				
	00.09-05.09	ES2	**C1N016**	**TP-68**				**Drum**				
1600	91.07-95.08	EG9	**C1N016**	**TP-68**				**C2N022**	**TP-34**			
	91.07-95.08	EH1 (RTX)	**C1N020**	**TP-67**				**Drum**				
	91.07-95.08	EH1 (RTSI)	**C1N016**	**TP-68**				**Drum**				
	93.08-95.08	EJ3 (Rear Drum)	**C1N016**	**TP-68**				**Drum**				
	93.08-95.08	EJ3 (Rear Disc)	**C1N016**	**TP-68**				**C2N022**	**TP-34**			
	95.09-00.09	EK4	**C1N016**	**TP-68**				**C2N022**	**TP-34**			
	95.09-00.09	EK5	**C1N016**	**TP-68**				**Drum**				
	97.01-98.08	EK8	**C1N020**	**TP-67**				**Drum**				
1700	00.09-05.09	ES3 (Rear Drum)	**C1N016**	**TP-68**				**Drum**				
	00.09-05.09	ES3 (Rear Disc)	**C1N016**	**TP-68**				**C2N015**	**TP-54**			
	03.09-05.09	ET2	**C1N016**	**TP-68**				**Drum**				
	01.11-05.05	ES9	**SN437P**									
CROSS ROAD クロスロード												
1800	07.02-10.08	RT1	**SN435P**	**TP-53**				**SN436P**	**TP-64**			
	07.02-10.08	RT1 (17inch)	**C1N026**	**TP-53**				**SN436P**	**TP-64**			
	07.02-10.08	RT2	**C1N026**	**TP-53**				**SN436P**	**TP-64**			
2000	07.02-10.08	RT3, 4	**C1N026**	**TP-53**				**SN436P**	**TP-64**			
CR-V												
1500	18.08-	RW1	**SN190P**									
	18.08-	RW2(4WD)	**SN190P**									
2000	95.10-01.09	RD1, 2 (A/ T)	**C1N035**	**A-455P**				**Drum**				
	97.09-01.09	RD1, 2 (M/ T)	**C1N018**	**TP-53**				**Drum**				
	01.09-04.09	RD4	**C1N037**	**A-662P**				**C2N061**	**TP-64**			
	01.09-04.09	RD5 (AT/ MT)	**C1N037**	**A-662P**				**C2N061**	**TP-64**			
	01.09-04.09	RD5 (AT VSA)	**C1N031**	**A-663P**				**C2N061**	**TP-64**			
	11.11-	RM1						**C2N061**	**TP-64**			
2400	04.09-06.10	RD6, 7	**C1N031**	**A-663P**				**C2N061**	**TP-64**			

VSA···Vehicle Stability Assist

cc	Year	Body Type	Front					Rear				
			Disc Pad	Seal Kit	Caliper		Piston	Disc Pad	Seal Kit	Caliper		Piston
					R	L				R	L	
CR-V												
	06.10-	RE3, 4	**C1N048**					**C2N061**	**TP-64**			
	11.11-	RM4						**C2N061**	**TP-64**			
CR-X												
1500	92.03-95.05	EG1	**C1N020**	**TP-67**				**Drum**				
	92.03-95.05	EG1 (ABS)	**C1N016**	**TP-68**				**C2N022**	**TP-34**			
1600	92.03-99.08	EG2	**C1N016**	**TP-68**				**C2N022**	**TP-34**			
	95.05-99.08	EJ4	**C1N020**	**TP-67**				**Drum**				
CR-Z												
1500	10.02-	ZF1	**C1N077**	**TP-68**				**C2N015**	**TP-54**			
	12.09-	ZF2	**C1N077**	**TP-68**				**C2N015**				
	15.05-	ZF2	**C1N031**	**A-663P**				**★C2N139**				
DOMANI ドマーニ												
1500	94.02-00.08	MA7, MB3	**C1N020**	**TP-67**				**Drum**				
1600	92.10-98.03	MA4, 6	**C1N020**	**TP-67**				**Drum**				
	92.10-98.03	MA4, 6 (ABS)	**C1N016**	**TP-68**				**C2N022**	**TP-34**			
	97.01-00.08	MB4	**C1N020**	**TP-67**				**Drum**				
	97.01-00.08	MB5	**C1N016**	**TP-68**				**Drum**				
1800	92.10-98.03	MA5 (Rear Drum)	**C1N016**	**TP-68**				**Drum**				
	92.10-98.03	MA5 (Rear Disc)	**C1N016**	**TP-68**				**C2N022**	**TP-34**			
EDIX エディックス												
1700	04.07-06.11	BE1	**C1N016**	**TP-68**				**Drum**				
	04.07-06.11	BE2	**C1N030**	**TP-92**				**C2N021**	**TP-64**			
2000	04.07-09.08	BE3, 4	**C1N030**	**TP-92**				**C2N021**	**TP-64**			
2400	06.11-09.08	BE8	**C1N030**	**TP-92**				**C2N021**	**TP-64**			
ELEMENT エレメント												
2400	03.04-05.07	YH2	**C1N031**					**C2N021**	**TP-64**			
ELYSION エリシオン												
2400	04.05-	RR1, 2	**C1N042**	**A-450P**				**SN436P**	**TP-64**			
3000	04.05-	RR3, 4	**C1N042**	**A-450P**				**SN436P**	**TP-64**			
3500	07.01-	RR5, 6	**C1N042**	**A-450P**				**SN436P**	**TP-64**			
	07.01-	RR5, 6 (EPB)	**C1N042**	**A-450P**								
FIT/ FIT ARIA フィット/ フィット アリア												
1300	01.06-07.10	GD1, 6	**SN424P**	**TP-89**				**Drum**				
	01.06-07.10	GD2, 7	**C1N020**	**TP-67**				**Drum**				
	07.10-09.11	GE6 (14inch)	**SN424P**	**TP-89**				**Drum**				
	07.10-09.11	GE6 , GE7	**C1N016**	**TP-68**				**Drum**				
	09.11-	GE6 (14inch)	**SN424P**	**TP-89**				**C2N022**	**TP-34**			
	09.11-	GE6	**C1N077**	**TP-68**				**C2N022**	**TP-34**			
	09.11-	GE7	**C1N077**	**TP-68**				**Drum**				
	13.09-17.06	GK3(14インチタイヤ)	**SN211P**									
	13.09-17.06	GK3(15インチタイヤ)	**C1N077**									
	17.06-	GK3	**C1N077**									
1500	02.09-07.10	GD3 (Rear Drum)	**C1N020**	**TP-67**				**Drum**				
	03.10-07.10	GD3 (Rear Disc)	**C1N020**	**TP-67**				**C2N022**	**TP-34**			
	02.09-09.01	GD4, 8, 9	**C1N020**	**TP-67**				**Drum**				
	07.10-09.11	GE8 (15inch) , GE9	**C1N016**	**TP-68**				**Drum**				
	07.10-09.11	GE8 (16inch)	**C1N016**	**TP-68**				**C2N022**	**TP-34**			
	09.11-10.10	GE8 (MT)	**C1N016**	**TP-68**				**C2N022**	**TP-34**			
	09.11-10.10	GE8 (AT)	**C1N077**	**TP-68**				**C2N022**	**TP-34**			

★発売予定

HONDA

cc	Year	Body Type	Front					Rear				
			Disc Pad	Seal Kit	Caliper		Piston	Disc Pad	Seal Kit	Caliper		Piston
					R	L				R	L	
FIT/ FIT ARIA フィット/ フィット アリア												
	10.10-	GE8	**C1N077**	**TP-68**				**C2N022**				
	07.11-	GE9(X)	**C1N077**	**TP-68**				**Drum**				
	07.10-	GE9(RS)	**C1N016**	**TP-68**								
FIT HYBRID フィット HV												
1300	10.10-	GP1	**C1N077**	**TP-68**				**Drum**				
1500	12.05-	GP4	**C1N077**	**TP-68**								
FIT SHUTTLE フィット シャトル												
1300	11.06-	GP2	**C1N077**	**TP-68**				**Drum**				
1500	11.06-	GG7	**C1N077**	**TP-68**				**Drum**				
	11.06-	GG8	**C1N077**	**TP-68**				**Drum**				
FREED フリード												
1500	08.05-10.11	GB3	**C1N016**	**TP-68**				**Drum**				
	10.11-	GB3	**C1N077**	**TP-68**				**Drum**				
	08.05-11.10	GB4	**C1N016**	**TP-68**				**Drum**				
	11.10-	GB4	**C1N077**	**TP-68**				**Drum**				
FREED/ FREEDPLUS フリード/ フリードプラス												
1500	16.09-	GB5(2WD)	**C1N077**	**TP-90**								
	16.09-	GB6(4WD)	**C1N077**	**TP-90**								
FREEDSPIKE フリード スパイク												
1500	08.05-11.10	GB3, 4	**C1N016**	**TP-68**				**Drum**				
	11.10-	GB3, 4	**C1N077**	**TP-68**				**Drum**				
FREED HYBRID フリード HV												
1500	11.10-	GP3	**C1N077**	**TP-68**				**Drum**				
GRACE グレイス												
1500	14.12-	GM4, 5		**TP90**				**Drum**				
	15.06-	GM6, GM9, GM9(教習車)		**TP68**				**Drum**				
HORIZON ホライゾン												
3000	98.02-99.09	UBS73	**J1N008**	**A-386P**				**J2N009**	**A-387P**			
3100	94.01-98.03	UBS69	**J1N008**	**A-386P**				**J2N009**	**A-387P**			
3200	94.01-98.03	UBS25	**J1N008**	**A-386P**				**J2N009**	**A-387P**			
3500	98.02-99.09	UBS26	**J1N008**	**A-386P**				**J2N009**	**A-387P**			
HR-V												
1600	98.09-06.02	GH1, 2, 3, 4	**C1N018**	**TP-53**				**Drum**				
INSIGHT インサイト												
1000	99.11-06.07	ZE1						**Drum**				
1300	09.02-	ZE2	**C1N077**	**TP-68**				**Drum**				
1500	11.10-	ZE3	**C1N077**	**TP-68**				**Drum**				
INSPIRE/ SABER インスパイア/ セイバー												
2000	89.09-95.02	CB5 (Rear Drum)	**SN418P**	**TP-53**				**Drum**				
	89.09-95.02	CB5 (Rear Disc)	**SN418P**	**TP-53**				**C2N015**	**TP-54**			
	92.01-98.10	CC3, UA1	**SN428P**	**TP-53**				**C2N015**	**TP-74**			
2500	92.01-98.10	CC2, UA2	**C1N018**	**TP-53**				**C2N015**	**TP-54**			
	98.10-01.04	UA4	**C1N018**	**TP-53**				**C2N021**	**TP-64**			
3000	03.06-07.12	UC1	**C1N026**	**TP-53**				**C2N015**	**TP-54**			
3200	95.02-98.10	UA3	**C1N018**	**TP-53**				**C2N015**	**TP-74**			
	98.10-01.04	UA5	**C1N026**	**TP-53**				**C2N021**	**TP-64**			
3500	07.12-12.10	CP3	**C1N026**	**TP-53**					**TP-64**			
INTEGRA インテグラ												
1500	96.03-00.08	KE3	**C1N020**	**TP-67**				**Drum**				

cc	Year	Body Type	Front					Rear				
			Disc Pad	Seal Kit	Caliper		Piston	Disc Pad	Seal Kit	Caliper		Piston
					R	L				R	L	
INTEGRA インテグラ												
1600	91.10-93.05	DA5, 7 (Rear Drum)	**C1N033**	**A-211P**				**Drum**				
	91.10-93.07	DA5, 7	**C1N033**	**A-211P**				**C2N022**	**TP-34**			
	91.10-93.07	DA5, 7 (ABS)	**C1N013**	**TP-36**				**C2N022**	**TP-34**			
	91.10-93.07	DA6, 8	**C1N013**	**TP-36**				**C2N022**	**TP-34**			
	93.05-00.09	DC1	**C1N020**	**TP-67**				**Drum**				
	93.05-00.09	DC1 (ABS)	**C1N024**	**TP-69**				**C2N022**	**TP-34**			
	93.07-00.09	DB6	**C1N016**	**TP-68**				**Drum**				
	93.07-00.09	DB6 (ABS)	**C1N024**	**TP-69**				**C2N022**	**TP-34**			
	93.07-00.09	DB9	**C1N016**	**TP-68**				**Drum**				
1800	91.10-93.07	DB1	**C1N013**	**TP-36**				**C2N022**	**TP-34**			
	93.07-95.09	DB7	**C1N024**	**TP-69**				**C2N022**	**TP-34**			
	95.10-98.01	DB8 (TYPE-R) (C/ #～1300000)	**C1N024**	**TP-69**				**C2N022**	**TP-34**			
	98.01-00.09	DB8 (TYPE-R) (C/ #1300001～)	**C1N018**	**TP-53**				**C2N015**	**TP-54**			
	93.07-00.09	DB8	**C1N024**	**TP-69**				**C2N022**	**TP-34**			
	95.10-98.01	DC2 (TYPE-R) (C/ #～1300000)	**C1N024**	**TP-69**				**C2N022**	**TP-34**			
	98.01-00.09	DC2 (TYPE-R) (C/ #1300001～)	**C1N018**	**TP-53**				**C2N015**	**TP-54**			
	93.05-00.09	DC2	**C1N024**	**TP-69**				**C2N022**	**TP-34**			
2000	01.07-04.09	DC5 (iS)	**C1N016**	**TP-68**				**C2N015**	**TP-54**			
	04.09-06.07	DC5 (TYPE-S)	**SN434P**	**TP-68**				**C2N015**	**TP-54**			
	01.07-06.07	DC5 (TYPE-R) (Brembo)						**C2N015**	**TP-54**			
JAZZ ジャズ												
3100	93.10-98.07	UCS69	**J1N008**	**A-386P**				**J2N009**	**A-387P**			
JADE ジェイド												
1500	15.02-	FR4	**C1N031**	**A663P**					**TP-64**			
	15.02-	FR5		**A663P**					**TP-64**			
LAGREAT ラグレイト												
3500	99.06-01.11	RL1 (Rear Drum)	**SN110**					**Drum**				
	01.11-04.01	RL1 (Rear Disc)	**SN110**									
LEGEND レジェンド												
3200	90.10-96.02	KA7, 8	**C1N018**	**TP-53**				**C2N021**	**TP-64**			
3500	96.02-04.09	KA9	**C1N018**	**TP-53**				**C2N021**	**TP-64**			
	98.10-04.09	KA9 (EURO)	**C1N026**	**TP-53**				**C2N021**	**TP-64**			
	04.10-12.07	KB1	**C1N044**	**SP128**			C9N001	**SN439P**				
3700	08.09-12.07	KB2	**C1N044**	**SP128**			C9N001	**SN439P**				
LIFE ライフ												
660	97.04-98.10	JA4	**SN569P**	**TP-27**				**Drum**				
	98.10-03.09	JB1, 2	**SN569P**	**TP-89**				**Drum**				
	00.12-03.09	JB3, 4 (Life Dunk)	**SN432P**	**TP-88**				**Drum**				
	03.09-08.10	JB5, 6	**SN569P**	**TP-89**				**Drum**				
	03.09-08.10	JB7, 8	**SN124P**	**SP403**				**Drum**				
	08.11-12.06	JC1, 2	**SN414**	**TP-89**				**Drum**				
	12.06-14.04	JC1, 2	**SN569P**	**TP-89**								
	08.11-	JC1, 2 (Turbo)	**SN124P**	**SP403**				**Drum**				
LOGO ロゴ												
1300	98.11-01.06	GA3 (TS, Sportic TS)	**C1N020**	**TP-67**				**Drum**				
	96.10-00.04	GA3	**SN424P**	**TP-27**				**Drum**				
	00.05-01.06	GA3	**SN424P**					**Drum**				
	98.11-01.06	GA5	**C1N020**	**TP-67**				**Drum**				

C/ #=Chassis Number

HONDA

cc	Year	Body Type	Front					Rear				
			Disc Pad	Seal Kit	Caliper		Piston	Disc Pad	Seal Kit	Caliper		Piston
					R	L				R	L	
MDX												
3500	03.03-06.06	YD1	**C1N042**	**A-450P**								
MOBILIO/MOBILIO SPIKE モビリオ/モビリオ スパイク												
1500	01.12-08.07	GB1, 2, GK1, 2	**C1N016**	**TP-68**				**Drum**				
N BOX												
660	11.12-13.12	JF1	**SN569P**	**TP-89**				**Drum**				
	13.12-	JF1		**TP-89**								
	11.11-	JF1(CustomGTurbo Package)	**SN124P**	**SP403**				**Drum**				
	11.11-	JF2	**SN124P**	**SP403**				**Drum**				
N BOX+												
660	12.07-	JF1, 2	**SN124P**	**SP403**				**Drum**				
N-ONE												
660	12.10-14.05	JG1, 2	**SN569P**	**TP-89**				**Drum**				
	14.05-	JG1, 2		**TP-89**								
	12.11-	JG1(Tourer)	**SN124P**	**SP403**				**Drum**				
N VAN												
660	18.07-	JJ1	**SN215P**	**TP-89**								
	18.07-	JJ2(4WD)	**SN215P**	**TP-89**								
N WGN												
660	13.11-	JH1, 2 (ターボ無)	**SN215P**	**TP-89**								
	13.11-	JH1, 2 (ターボ付)	**SN124P**	**SP403**								
	19.08-	JH3, 4										
NSX												
3000	90.09-99.11	NA1	**C1N018**	**C-211P**								
	92.11-95.09	NA1 (TYPE-R)										
	99.11-05.12	NA1 (00Model)	**C1N018**									
3200	97.01-99.11	NA2	**C1N018**	**C-211P**								
	99.11-05.12	NA2 (00Model)	**C1N018**									
	02.05-05.12	NA2 (TYPE-R)										
N WGN Nワゴン												
660	13.11-	JH1, 2		**TP-89**				**Drum**				
	13.11-	JH1, 2 (Turbo)	**SN124P**	**SP403**								
ODYSSEY オデッセイ												
2200	94.10-97.08	RA1, 2	**C1N018**	**TP-53**				**C2N021**	**TP-64**			
2300	97.08-99.12	RA3, 4	**C1N018**	**TP-53**				**C2N021**	**TP-64**			
	99.12-03.09	RA6, 7	**C1N026**	**TP-53**				**C2N021**	**TP-64**			
2400	03.10-	RB1, 2, 3, 4	**SN435P**	**TP-53**				**SN436P**	**TP-64**			
	03.10-	RB1, 2, 3, 4 (Absolute)	**C1N026**	**TP-53**				**SN436P**	**TP-64**			
	13.10-	RC1, 2						**C2N061**	**TP-64**			
3000	97.10-99.12	RA5	**C1N018**	**TP-53**				**C2N021**	**TP-64**			
	00.01-03.09	RA8, 9	**C1N026**	**TP-53**				**C2N021**	**TP-64**			
ODYSSEY HYBRID オデッセイ ハイブリッド												
2000	16.02-	RC4	**SN213P**					**SN598P**				
		※7										
	16.02-	※8	**SN213P**					**★C2N139**				
ORTHIA オルティア												
1800	96.03-99.06	EL1	**C1N024**	**TP-69**				**Drum**				
2000	96.03-02.01	EL2, 3	**C1N024**	**TP-69**				**Drum**				
PARTNER パートナー												
1300	96.03-03.08	EY6	**C1N020**	**TP-67**				**Drum**				

※7 C/ #-1150000
※8 C/ #1150000-★発売予定
C/ #1400001-2000000

cc	Year	Body Type	Front					Rear				
			Disc Pad	Seal Kit	Caliper		Piston	Disc Pad	Seal Kit	Caliper		Piston
					R	L				R	L	
PARTNER パートナー												
1500	96.03-06.03	EY7	**C1N020**	**TP-67**				**Drum**				
	06.03-10.08	GJ3, 4	**C1N020**	**TP-67**				**Drum**				
1600	96.03-06.03	EY8, 9	**C1N020**	**TP-67**				**Drum**				
RAFAGA ラファーガ												
2000	93.10-98.03	CE4 (Rear Drum)	**SN418P**	**TP-53**				**Drum**				
	93.10-98.03	CE4 (Rear Disc)	**SN418P**	**TP-53**				**C2N015**	**TP-54**			
2500	93.10-98.03	CE5	**C1N018**	**TP-53**				**C2N015**	**TP-54**			
2200	05.11-09.08	AP2	**SN434P**	**TP-68**				**C2N015**				
PRELUDE プレリュード												
2200	91.09-00.09	BA8, 9, BB5, 7	**SN428P**	**TP-53**				**C2N015**	**TP-54**			
	91.09-00.09	BB1, 4, 6, 8	**C1N018**	**TP-53**				**C2N015**	**TP-54**			
S-MX												
2000	96.11-02.04	RH1, 2	**C1N018**	**TP-53**				**Drum**				
STEP WGN ステップ ワゴン												
1500	15.04-	RP1, 2						**C2N061**	**TP-64**			
2000	96.05-05.04	RF1, 2, 3, 4, 5, 6	**C1N018**	**TP-53**				**C2N021**	**TP-64**			
	05.05-09.10	RG1, 2	**SN435P**	**TP-53**				**SN436P**	**TP-64**			
	09.10-	RK1, 2	**C1N031**	**A-663P**				**C2N061**	**TP-64**			
2400	03.06-05.04	RF7, 8	**C1N018**	**TP-53**				**C2N021**	**TP-64**			
	05.05-09.10	RG3, 4	**SN435P**	**TP-53**				**SN436P**	**TP-64**			
STEP WGN SPADA ステップ ワゴン スパーダ												
1500	15.04-	RP3, 4						**C2N061**	**TP-64**			
2000	09.10-	RK5, 6	**C1N031**	**A-663P**				**SN598P**	**TP-64**			
	17.09-	RP5(ハイブリッド)	**SN213P**					**★C2N139**				
STREAM ストリーム												
1700	00.10-06.07	RN1 , RN2	**C1N016**	**TP-68**				**Drum**				
	03.09-06.07	RN1 (Absolute)	**C1N030**	**TP-92**				**C2N021**	**TP-64**			
1800	06.07-	RN6 (~C/ #3100000)	**SN435P**	**TP-53**				**SN436P**	**TP-64**			
	06.07-	RN6 (C/ #3100001~)	**SN435P**	**TP-53**				**Drum**				
	06.07-	RN7	**SN435P**	**TP-53**				**SN436P**	**TP-64**			
2000	00.10-06.07	RN3, 4, 5	**C1N030**	**TP-92**				**C2N021**	**TP-64**			
	06.07-	RN8, 9	**SN435P**	**TP-53**				**SN436P**	**TP-64**			
S660												
660	15.04-	JW5							**TP-54**			
S2000												
2000	99.04-05.11	AP1	**SN434P**	**TP-68**				**C2N015**				
THAT'S ザッツ												
660	02.02-07.09	JD1, 2	**SN569P**	**TP-89**				**Drum**				
	02.02-06.03	JD1, 2 (Turbo)	**SN432P**	**TP-88**				**Drum**				
TODAY トゥディ												
660	90.02-93.01	JA2, 3JW3, 4	**SN422**	**TP-27**				**Drum**				
	94.09-98.10	JW3, 4 (C/ #2100001~)	**SN569P**	**TP-27**				**Drum**				
	93.02-98.10	JW3 (Pro) (C/ #2010111~) JW4 (Pro) (C/ #2001462~)	**SN422**	**TP-27**				**Drum**				
	93.01-98.10	JA4, 5	**SN569P**	**TP-27**				**Drum**				
VAMOS バモス												
660	99.05-	HM1, 2	**SN569P**	**TP-89**				**Drum**				
VAMOS HOBIO バモス ホビオ												
660	03.04-	HM3, 4, HJ1, 2	**SN569P**	**TP-89**				**Drum**				

★発売予定
C/ #=Chassis Number

HONDA

cc	Year	Body Type	Front					Rear				
			Disc Pad	Seal Kit	Caliper		Piston	Disc Pad	Seal Kit	Caliper		Piston
					R	L				R	L	
VEZEL ヴェゼル												
1500	13.12-	RU1, 2, 3, 4	**SN213P**					**★C2N139**				
	16.02-	RU1, 2, 3, 4	**SN213P**									
VIGOR ビガー												
2000	89.09-95.02	CB5 (Rear Drum)	**SN418P**	**TP-53**				**Drum**				
	89.09-95.02	CB5 (Rear Disc)	**SN418P**	**TP-53**				**C2N015**	**TP-54**			
	92.01-95.02	CC3	**SN428P**	**TP-53**				**C2N015**	**TP-64**			
2500	92.01-95.02	CC2	**C1N018**	**TP-53**				**C2N015**	**TP-54**			
Z												
660	98.10-02.01	PA1						**Drum**				
ZEST/ZEST SPARK ゼスト/ゼストスパーク												
660	06.03-12.11	JE1, 2	**SN569P**	**TP-89**				**Drum**				
	06.03-12.11	JE1, 2 (Turbo)	**SN124P**	**SP403**				**Drum**				
	06.03-12.11	JE1 (Welfare Car)	**SN124P**	**SP403**				**Drum**				

★発売予定

SPECIFIC INDEX FOR SUBARU

CAR NAME	PAGE
ALCYONE SVX アルシオーネ SVX	104
BRZ	104
シフォン CHIFFON	104
DEX デックス	104
DIAS WAGON ディアズ ワゴン	104
DOMINGO ドミンゴ	104
EXIGA エクシーガ	104
FORESTER フォレスター	104
IMPREZA インプレッサ	105
IMPREZA ANESIS インプレッサ アネシス	106
IMPREZA G4 インプレッサ G4	106
IMPREZA SPORTS インプレッサ スポーツ	106
IMPREZA SPORTS WAGON インプレッサ スポーツワゴン	106
JUSTY ジャスティ	107
LEGACY レガシィ	107
LEGACY TOURING WAGON レガシィ ツーリングワゴン	108
LEONE レオーネ	110
LEONE(Van) レオーネ(バン)	110

CAR NAME	PAGE
LEVORG レヴォーグ	110
LUCRA ルクラ	110
PLEO プレオ	111
PLEO PLUS プレオプラス	111
PLUGIN STELLA プラグイン ステラ	111
R1/2	111
REX レックス	111
SAMBAR(Truck) サンバー(トラック)	111
SAMBAR DIAS WAGON サンバー ディアスワゴン	111
SAMBAR DIAS WAGON サンバー ディアス7ワゴン	111
SAMBAR (Van・PanelVan) サンバー (バン・パネルバン)	111
STELLA ステラ	111
TRAVIQ トラヴィック	111
TREZIA トレジア	111
VIVIO ヴィヴィオ	111
WRX S4	111
WRX STI	112
XV	112

SUBARU

cc	Year	Body Type	Front					Rear				
			Disc Pad	Seal Kit	Caliper		Piston	Disc Pad	Seal Kit	Caliper		Piston
					R	L				R	L	
ALCYONE SVX アルシオーネ SVX												
3300		TP-63	**SN796P**	**A-297P**								
BRZ												
2000	12.03-	ZC6(RA, R)	**F1N018**					**F2N022**				
	12.03-	ZC6(RA Racing, S)	**F1N018**					**F2N037**				
シフォン CHIFFON												
660	16.12-	LA600F, LA610F	**SN214**									
661	19.07-	LA650F, LA660F										
DEX デックス												
1300	08.11-12.11	M401F, 411F	**SN949P**	**TP-80**				**Drum**				
DIAS WAGON ディアズ ワゴン												
660	09.09-	S321N, 331N	**SN145P**	**SP129**				**Drum**				
DOMINGO ドミンゴ												
1000	83.10-94.06	KJ5		**TP-25**				**Drum**				
1200	86.06-94.06	KJ8		**TP-25**				**Drum**				
	94.06-98.11	FA7, 8	**F1N003**	**MP-34**				**Drum**				
EXIGA エクシーガ												
2000	08.06-10.02	YA4	**F1N018**	**TP-87**				**F2N022**	**TP-94**			
	08.06-10.02	YA4, 5	**F1N018**	**TP-87**				**F2N022**	**TP-94**			
	08.06-10.02	YA4, 5 (Turbo)	**F1N042**	**TP-87**				**F2N022**	**TP-94**			
	10.02-	YA4, 5	**F1N018**	**TP-87**				**F2N022**	**TP-94**			
	10.02-	YA4, 5 (Turbo)	**F1N018**	**TP-87**				**F2N022**	**TP-94**			
2500	09.12-10.04	YA9	**F1N042**	**TP-87**				**F2N022**	**TP-94**			
	10.04-	YA9	**F1N018**	**TP-87**				**F2N022**	**TP-94**			
	12.05-	YAM	**F1N018**	**TP-87**				**F2N022**	**TP-94**			
FORESTER フォレスター												
2000	97.02-98.07	SF5 C, S, T	**F1N013**	**A-463P**				**F2N015**	**A-475P**			
	97.06-02.01	SF5 C20, S20, S20-Limited	**F1N013**	**A-463P**				**Drum**				
	98.08-02.01	SF5 S-TB, T-TB	**F1N013**	**A-463P**				**F2N015**	**A-475P**			
	00.05-02.01	SF5 STI, STI-Limited, STI-typeM	**SN109P**	**SP109**			D9N001	**F2N015**	**A-475P**			
	02.02-05.01	SG5 X, X20, X20Tough sports, Xback pacEdition, X20LLBean Edition, Cross Sports2.0α	**F1N042**	**TP-87**				**Drum**				
	02.02-03.01	SG5 XT, Cross Sports	**F1N042**	**TP-87**				**F2N015**	**A-475P**			
	03.02-05.01	SG5 XT, Cross Sports	**F1N042**	**TP-87**				**F2N016**	**A-475P**			
	03.11-06.12	SG5 XT-WRLimited2004, 2.0XT, Cross Sports2.0T	**F1N042**	**TP-87**				**F2N016**	**A-475P**			
	03.05-05.01	SG5 Cross Sports2.0i	**F1N042**	**TP-87**				**Drum**				
	05.02-05.12	SG5 Cross Sports2.0i	**F1N042**	**TP-87**				**F2N016**	**A-475P**			
	06.01-07.11	SG5 Cross Sports2.0i	**F1N018**	**TP-87**				**F2N016**	**A-475P**			
	04.11-05.12	SG5 2.0X, 2.0XS, LLBeanEdition	**F1N042**	**TP-87**				**F2N016**	**A-475P**			
	06.01-07.11	SG5 2.0X, 2.0XS, LLBeanEdition	**F1N018**	**TP-87**				**F2N016**	**A-475P**			
	05.11-07.11	SG5 AirBrake, 10hAnv, Cross Sports2.0i SEdition	**F1N018**	**TP-87**				**F2N016**	**A-475P**			
	04.11-07.11	SG5 Cross Sports2.0TSports, Cross SportsSEdition, Cross2.0TSportsSEdition	**F1N042**	**TP-87**				**F2N016**	**A-475P**			
	07.12-10.04	SH5 X, XS	**F1N018**	**TP-87**				**F2N022**	**TP-94**			
	07.12-10.04	SH5 XT (Turbo)	**F1N042**	**TP-87**				**F2N022**	**TP-94**			
	10.07-	SHJ	**F1N018**	**TP-87**				**F2N022**	**TP-94**			
	10.04-	SH5	**F1N018**	**TP-87**				**F2N022**	**TP-94**			
	12.08-	SJ5	**F1N018**					**F2N022**	**TP-94**			
	12.08-	SJG	**F1N019**					**F2N037**				

cc	Year	Body Type	Front					Rear				
			Disc Pad	Seal Kit	Caliper		Piston	Disc Pad	Seal Kit	Caliper		Piston
					R	L				R	L	
FORESTER フォレスター												
2001	18.05-	SKE						**SN220P**				
2500	98.08-02.01	SF9 T-25	**F1N018**	**A-463P**				**F2N015**	**A-475P**			
	04.02-	SG9 STI (Brembo)										
	10.07-12.11	SH9	**F1N018**	**TP-87**				**F2N022**	**TP-94**			
	18.05-	SK9						**SN220P**				
IMPREZA インプレッサ												
1500	92.11-94.08	GC1 CS	**SN794P**	**C-295P**				**Drum**				
	92.11-96.08	GC1 CX, CF	**SN794P**	**C-295P**				**Drum**				
	92.11-96.08	GC1 CX, CF (ABS)	**SN794P**	**C-295P**				**F2N012**	**C-297P**			
	96.09-98.08	GC1 CF, SX, Extra	**SN794P**	**C-295P**				**Drum**				
	96.09-98.08	GC1 CF, SX, Extra (ABS)	**F1N014**	**A-462P**				**Drum**				
	94.09-00.08	GC1 CSExtra	**SN794P**	**C-295P**				**Drum**				
	94.09-96.08	GC1 CSExtra (ABS)	**SN794P**	**C-295P**				**F2N012**	**C-297P**			
	96.09-00.08	GC1 CSExtra (ABS)	**F1N014**	**A-462P**				**F2N012**	**C-297P**			
	95.01-96.08	GC1 RETNA	**SN794P**	**C-295P**				**Drum**				
	96.09-97.08	GC1 RETNA	**SN794P**	**C-295P**				**F2N012**	**C-297P**			
	96.09-97.08	GC1 RETNA (ABS)	**F1N014**	**A-462P**				**F2N012**	**C-297P**			
	96.09-00.08	GC2 CF Extra, CS Extra	**SN794P**	**C-295P**				**Drum**				
	96.09-00.08	GC2 CF Extra, CS Extra(ABS)	**F1N014**	**A-462P**				**F2N012**	**C-297P**			
	96.09-97.08	GC2 RETNA	**SN794P**	**C-295P**				**F2N012**	**C-297P**			
	96.09-97.08	GC2 RETNA (ABS)	**F1N014**	**A-462P**				**F2N012**	**C-297P**			
	03.04-07.06	GD2, 3 i, i- Limited, i-FPackage, i-Delight selection	**F1N020**	**A-462P**				**Drum**				
	06.04-07.06	GDC, GDD R	**F1N020**	**A-462P**				**Drum**				
	06.04-07.06	GDC, GDD R (Sporty Package)	**F1N018**	**TP-87**				**F2N016**	**A-475P**			
	07.06-	GH2, 3 i, i-L, S Comfortselection, BEAMS edition	**F1N020**	**A-462P**				**Drum**				
	09.07-	GH2, 3 i-S	**F1N018**	**TP-87**				**F2N022**	**TP-94**			
1600	92.11-96.08	GC4 CF, CS, CS Extra	**SN794P**	**C-295P**				**Drum**				
	92.11-96.08	GC4 CF, CS, CS Extra (ABS)	**SN794P**	**C-295P**				**F2N012**	**C-297P**			
	95.01-96.08	GC4 RETNA	**SN794P**	**C-295P**				**Drum**				
1800	92.11-96.08	GC6 HX, HX-S, HX EditionS	**SN794P**	**C-295P**				**Drum**				
	92.11-96.08	GC6 HX, HX-S, HX EditionS(ABS)	**SN794P**	**C-295P**				**F2N012**	**C-297P**			
2000	96.09-98.08	GC8 HX-20	**F1N014**	**A-462P**				**Drum**				
	92.11-96.08	GC8 WRX		**C-295P**				**F2N012**	**A-297P**			
	96.09-98.08	GC8 WRX	**F1N013**	**A-463P**				**F2N012**	**A-297P**			
	98.09-00.08	GC8 WRX	**F1N013**	**A-463P**				**F2N015**	**A-475P**			
	92.11-96.08	GC8 WRX-RA		**C-296P**				**F2N012**	**A-297P**			
	96.09-98.08	GC8 WRX-RA (2POT)	**F1N013**	**A-463P**				**F2N012**	**A-297P**			
	98.09-00.08	GC8 WRX-RA (2POT)	**F1N013**	**A-463P**				**F2N015**	**A-475P**			
	96.09-97.08	GC8 WRX-RA (4POT)	**SN109P**	**SP109**			D9N001	**F2N012**	**C-297P**			
	94.09-96.08	GC8 WRX-VLimited, WRX-RA-STI		**C-296P**				**F2N012**	**A-297P**			
	96.09-00.08	GC8 WRX-RA-STI (2POT)	**F1N013**	**A-463P**				**F2N012**	**A-297P**			
	96.09-97.08	GC8 WRX-RA-STI (4POT)	**SN109P**	**SP109**			D9N001	**F2N012**	**A-297P**			
	97.09-00.08	GC8 WRX-RA-STI (4POT)	**SN109P**	**SP109**			D9N001		**A-302P**			
	95.08-96.08	GC8 WRX-STI		**C-296P**				**F2N012**	**A-297P**			
	96.09-98.08	GC8 WRX-STI	**SN109P**	**SP109**			D9N001	**F2N012**	**A-297P**			
	98.09-00.08	GC8 WRX-STI	**SN109P**	**SP109**			D9N001	**F2N015**	**A-475P**			
	98.09-99.07	GC8 SRX	**F1N013**	**A-463P**				**F2N015**	**A-475P**			

SUBARU

SUBARU

cc	Year	Body Type	Front					Rear				
			Disc Pad	Seal Kit	Caliper		Piston	Disc Pad	Seal Kit	Caliper		Piston
					R	L				R	L	
IMPREZA インプレッサ												
	96.09-97.08	GC8 WRX-R-STI (Coupe)	**SN109P**	**SP109**			D9N001	**F2N012**	**C-297P**			
	97.09-00.08	GC8 WRX-R-STI (Coupe)	**SN109P**	**SP109**			D9N001		**A-302P**			
	00.08-02.10	GDA WRX-NB	**F1N042**	**TP-87**				**F2N015**	**A-475P**			
	01.09-02.10	GDA WRX-NBR	**SN109P**	**SP109**			D9N001		**A-302P**			
	02.11-07.06	GDA WRX, V-Limited, WR-Limited	**SN109P**	**SP109**			D9N001		**A-302P**			
	00.08-02.10	GD9 WRX-NA	**F1N042**	**TP-87**				**F2N015**	**A-475P**			
	02.11-03.08	GD9 20S	**F1N018**	**TP-87**				**F2N016**	**A-475P**			
	00.10-07.06	GDB STI, STI-typeRA, RA-specC, STI-Limited, STI-VLimited, STI-PRO, STI-specC, S204(Brembo)										
	00.10-07.06	GDB STI-typeRA, RA-specC, STI-specC	**SN109P**	**SP109**			D9N001		**A-302P**			
	06.06-07.06	GDB WRX-ALine(Brembo)										
	06.06-07.06	GDB STI-specC-TypeRA-A(brembo 6pot)										
	07.06-	GH6, 7 i, i-S, S, Comfort selection, BEAMS edotion	**F1N018**	**TP-87**				**F2N022**	**TP-94**			
	07.06-	GH8 S-GT, S-GTSports Package, GT, Customize	**F1N042**	**TP-87**				**F2N022**	**TP-94**			
	07.10-	GRB, GVB WRX-STI(Brembo)										
	11.11-	GP6, 7	**F1N018**	**TP-87**				**F2N022**	**TP-94**			
2500	09.02-	GRF, GVF WRX-STI -A-Line(Brembo)										
	09.02-	GRF, GVF WRX-STI -A-Line	**F1N019**	**TP-93**				**F2N037**				
IMPREZA ANESIS インプレッサ アネシス												
1500	08.10-11.09	GE2, 3 1.5i, 1.5i-L, コンフォートセレクション	**F1N020**	**A-462P**								
	11.09-11.11	GE2, 3 1.5i		**A-462P**								
2000	08.10-10.04	GE6, 7 2.0i, 2.0i-S, コンフォートセレクション	**F1N018**	**TP-87**				**F2N022**	**TP-94**			
	10.04-11.11	GE6, 7 2.0i, 2.0i-S, コンフォートセレクション	**SN227P**	**TP-87**				**F2N022**	**TP-94**			
IMPREZA G4 インプレッサ G4												
1600	11.09-	GJ2, 3										
	16.10-	GK2(2WD) , GK3(4WD)						**★F2N044**				
2000	11.09-	GJ6, 7	**F1N018**									
	16.8-	GK6(2WD) , GK7(4WD)						**★F2N044**				
IMPREZA SPORTS インプレッサ スポーツ												
1600	11.09-	GP2, 3						**F2N022**	**TP-94**			
	11.09-15.08	GP2, 3						**F2N022**	**TP-94**			
	15.08-	GP2, 3						**F2N022**	**TP-94**			
	16.10-	GT2(2WD) , GT3(4WD)						**★F2N044**				
2000	11.09-	GP6(2WD) , GP7(4WD)	**SN227P**	**TP-87**				**★F2N044**				
2001	16.10-	GT6(2WD) , GT7(4WD)						**★F2N044**				
IMPREZA SPORTS WAGON インプレッサ スポーツワゴン												
1500	94.09-96.08	GF1 CS, CZ, CZ2	**SN794P**	**C-295P**				**Drum**				
	96.09-00.08	GF1 CS, CZ, Casablanca	**SN794P**	**C-295P**				**Drum**				
	96.09-00.08	GF1 CS, CZ, Casablanca (ABS)	**F1N014**	**A-462P**				**Drum**				
	99.07-00.08	GF1 CZSport	**F1N014**	**A-462P**				**Drum**				
	96.09-98.08	GF2 CZ	**SN794P**	**C-295P**				**Drum**				
	96.09-98.08	GF2 CZ (ABS)	**F1N014**	**A-462P**				**Drum**				
	98.09-00.08	GF2 CZ, CZSport, Casablanca	**F1N014**	**A-462P**				**Drum**				
	00.08-02.10	GG2, 3 I'S, I'SSport, I'SSport-Limited	**F1N014**	**A-462P**				**Drum**				
	02.11-07.06	GG2, 3 i, i-Limited, i-Navi, i-FPackage, i-Delight Selection	**F1N020**	**A-462P**				**Drum**				
	02.11-07.06	GG2, 3 i-S (Rear Drum)	**F1N020**	**A-462P**				**Drum**				

★発売予定

cc	Year	Body Type	Front					Rear				
			Disc Pad	Seal Kit	Caliper		Piston	Disc Pad	Seal Kit	Caliper		Piston
					R	L				R	L	
IMPREZA SPORTS WAGON インプレッサ スポーツワゴン												
	04.06-07.06	GG2, 3 i-S (Rear Disc)	**F1N018**	**TP-87**				**F2N016**	**A-475P**			
	06.04-07.06	GGC, GGD R	**F1N020**	**A-462P**				**Drum**				
	06.04-07.06	GGC, GGD R (Sporty package)	**F1N018**	**TP-87**				**F2N016**	**A-475P**			
1600	92.11-96.08	GF3, 4 CS, CS-Extra, CS-X, CX	**SN794P**	**C-295P**				**Drum**				
	92.11-96.08	GF3, 4 CS, CS-Extra, CS-X, CX(ABS)	**SN794P**	**C-295P**				**F2N012**	**C-297P**			
1800	92.11-94.08	GFA HX	**SN794P**	**C-295P**				**Drum**				
	92.11-94.08	GFA HX (ABS)	**SN794P**	**C-295P**				**F2N012**	**C-297P**			
	96.09-00.08	GF5 GB	**F1N014**	**A-462P**				**Drum**				
	92.11-96.08	GF6 HS, HX, HX-S, HX-L, CZ-L, HXEditionS, HXEditionL	**SN794P**	**C-295P**				**Drum**				
	92.11-96.08	GF6 HS, HX, HX-S, HX-L, CZ-L, HXEditionS, HXEditionL(ABS)	**SN794P**	**C-295P**				**F2N012**	**C-297P**			
	96.09-00.08	GF6 GB	**F1N014**	**A-462P**				**Drum**				
2000	93.10-94.08	GF8 WRX-SA		**A-296P**				**F2N012**	**A-297P**			
	93.10-96.08	GF8 WRX		**A-296P**				**F2N012**	**A-297P**			
	96.09-98.08	GF8 WRX	**F1N013**	**A-463P**				**F2N012**	**A-297P**			
	98.09-00.08	GF8 WRX	**F1N013**	**A-463P**				**F2N015**	**A-475P**			
	98.09-00.08	GF8 SRX	**F1N013**	**A-463P**				**F2N015**	**A-475P**			
	96.01-96.08	GF8 HX-20S	**SN794P**	**C-295P**				**Drum**				
	96.01-96.08	GF8 HX-20S (ABS)	**SN794P**	**C-295P**				**F2N012**	**A-297P**			
	96.09-98.08	GF8 HX-20S	**F1N014**	**A-462P**				**Drum**				
	95.10-96.08	GF8 GRAVEL, EX, WRX-STI		**A-296P**				**F2N012**	**A-297P**			
	96.09-98.08	GF8 WRX-STI, WRX-VLimited	**SN109P**	**SP109**			D9N001	**F2N012**	**A-297P**			
	98.09-00.08	GF8 WRX-STI	**SN109P**	**SP109**			D9N001	**F2N015**	**A-475P**			
	00.08-02.10	GGA 20K	**F1N042**	**TP-87**				**F2N015**	**A-475P**			
	02.11-07.06	GGA WRX	**SN109P**	**SP109**			D9N001		**A-302P**			
	00.10-02.10	GGB STI	**SN109P**	**SP109**			D9N001		**A-302P**			
	00.08-02.10	GG9 20N	**F1N042**	**TP-87**				**F2N015**	**A-475P**			
	02.11-04.05	GG9 20S	**F1N018**	**TP-87**				**F2N016**	**A-475P**			
	09.07-	GVB STI										
	09.07-	GVB S206NBR ChallengePac										
2500	09.07-11.02	GVF	**F1N019**	**TP-93**								
JUSTY ジャスティ												
1200	88.11-94.03	KA7, 8		**TP-80**				**Drum**				
LEGACY レガシィ												
1800	90.06-93.09	BCK CX	**SN794P**	**TP-55**				**Drum**				
	89.02-93.09	BC2, 3 Ei, Mi, MiExtraG	**SN794P**	**A-295P**				**Drum**				
	89.02-93.09	BC2, 3 Vi, Ti, Ti-S	**SN794P**	**TP-55**				**Drum**				
	89.02-93.09	BC2, 3 Vi, Ti, Ti-S (ABS)	**SN794P**	**TP-55**				**F2N012**	**C-297P**			
	94.06-96.05	BD2, 3 LX	**SN794P**	**TP-55**				**Drum**				
	96.06-98.11	BD2, 3 LX	**F1N014**	**A-462P**				**Drum**				
	94.06-96.05	BD2, 3 LX (ABS)	**SN794P**	**TP-55**				**F2N012**	**C-297P**			
	96.06-98.11	BD2, 3 LX (ABS)	**F1N014**	**A-462P**				**F2N012**	**C-297P**			
2000	90.05-93.09	BCA, BCL, BCM CX, VZ	**SN794P**	**TP-55**				**F2N012**	**C-297P**			
	89.02-93.09	BC4, 5 TZ, VZ, Brighton	**SN794P**	**TP-55**				**F2N012**	**C-297P**			
	89.02-92.09	BC4, 5 RS, RS-R, RS-RA, GT, GTS-Ⅱ, VZ-R	**F1N011**	**A-296P**				**F2N012**	**A-297P**			
	92.10-93.09	BC4, 5 RS, RS-R, RS-RA, GT, GTS-Ⅱ, VZ-R	**F1N011**	**C-296P**				**F2N012**	**A-297P**			
	93.10-96.05	BD4 TS, TS-V, TS-R	**SN794P**	**TP-55**				**F2N012**	**C-297P**			
	93.10-96.05	BD4 TX, Brighton, BrightonGold	**SN794P**	**TP-55**				**Drum**				

SUBARU

cc	Year	Body Type	Front					Rear				
			Disc Pad	Seal Kit	Caliper		Piston	Disc Pad	Seal Kit	Caliper		Piston
					R	L				R	L	
LEGACY レガシィ												
	93.10-96.05	BD4 TX, Brighton, BrightonGold(ABS)	**SN794P**	**TP-55**				**F2N012**	**C-297P**			
	96.06-98.11	BD4 Brighton, BrightonGold	**F1N014**	**A-462P**				**F2N012**	**C-297P**			
	93.10-96.05	BD5 TX, TX-S, Brighton, BrightonGold	**SN794P**	**TP-55**				**Drum**				
	93.10-96.05	BD5 TX, TX-S, Brighton, BrightonGold (ABS)	**SN794P**	**TP-55**				**F2N012**	**C-297P**			
	96.06-98.11	BD5 TX-S, Brighton, BrightonGold	**F1N014**	**A-462P**				**F2N012**	**C-297P**			
	93.10-97.07	BD5 TS, TS-R, TS-V	**SN794P**	**TP-55**				**F2N012**	**C-297P**			
	97.08-98.11	BD5 TS-R (16inch)	**F1N013**	**A-463P**				**F2N012**	**A-297P**			
	97.08-98.11	BD5 TS-R	**F1N014**	**A-462P**				**F2N012**	**C-297P**			
	93.10-96.05	BD5 GT, RS	**F1N011**	**C-296P**				**F2N012**	**A-297P**			
	96.06-98.11	BD5 GT, RS	**F1N013**	**A-463P**				**F2N012**	**A-297P**			
	98.11-03.04	BE5 (B4) S, RS, RS-typeB, RSK	**F1N013**	**A-463P**				**F2N015**	**A-475P**			
	02.01-03.04	BE5 (B4) RSKLimited, RSKLimitedⅡ	**F1N042**	**TP-87**				**F2N015**	**A-475P**			
	01.05-03.04	BE5 (B4) RSK (4POT)	**SN109P**	**SP109**			B9N001	**F2N015**	**A-475P**			
	02.11-03.04	BES S401 (Brembo)										
	03.05-09.02	BL5 (B4) R, R-Alcantara Selection, R-Bsports, R-i-vory Leather Selection, R-SpecB	**F1N042**	**TP-87**				**F2N022**	**TP-94**			
	03.05-09.02	BL5 (B4) i, iAAlcantara Selection, i-Bsports Limited, i-Brighton, i-Urban Selection, i-i-vory Leather Selection, i-Advantage Line, i-Smart Selection	**F1N018**	**TP-87**				**F2N022**	**TP-94**			
	03.05-09.02	BL5 (B4) GT, GT-SpecB, Blitzen, GT-Urban Selection, GT-SIcruise, GT-Sicruise Limited, GT-Sicruise Urban Selection, GT-Alcantara Selection, GT-SpecB-WRLimited, GT-WRLimited, GT-EyeSight, GT-Smart Selection, GT-Premium Leather Limited	**F1N019**	**TP-93**				**F2N015**	**A-475P**			
	05.03-09.02	BL5 (B4) GT-SpecB, Tuned-by-STI(Brembo)										
	04.05-09.02	BL5 (B4) CNG, R-CNG (LPG)	**F1N042**	**TP-87**				**F2N022**	**TP-94**			
	11.11-	BMG (B4)	**F1N019**	**TP-93**				**F2N037**				
2500	94.10-96.05	BD9 250T, 250T-V	**F1N011**	**C-296P**				**F2N012**	**A-297P**			
	96.06-98.11	BD9 250T, 250T-V	**F1N013**	**A-463P**				**F2N012**	**A-297P**			
	01.05-03.04	BE9 (B4) RS25	**F1N013**	**A-463P**				**F2N015**	**A-475P**			
	07.11-09.02	BL9 (B4) i, i-Urban Selection, i-SICruise, i-Smartselection, i-PremiumletherLimited	**F1N018**	**TP-87**				**F2N022**	**TP-94**			
	08.03-09.02	BL9 (B4) 2.5i SiCruise	**F1N019**	**TP-93**				**F2N015**	**A-475P**			
	08.06-09.02	BL9 (B4) S402 (Brembo)										
	09.05-12.04	BM9 (B4) i, i-LPackage, iEyeSight Sports Selection, EyeSight, i SStyle, EyeSight, BSports, EyeSight, BSports.GPackage	**F1N018**	**TP-87**				**F2N022**	**TP-94**			
	09.05-12.04	BM9 (B4) i-SPackage, i LPackageLTD	**F1N042**	**TP-87**				**F2N022**	**TP-94**			
	09.05-	BM9 (B4) i SPackageLTD, GT, iEyeSightSPackage	**F1N019**	**TP-87**				**F2N037**				
	11.11-	BMM (B4) 2.5i, EyeSight SPackage	**F1N019**	**TP-93**				**F2N037**				
	11.11-	BMM (B4) 2.5i, 2.5i LPackage, 2.5i, EyeSight	**F1N018**	**TP-87**				**F2N022**				
3000	02.01-03.04	BEE (B4) RS30	**F1N013**	**A-463P**				**F2N015**	**A-475P**			
	03.09-09.02	BLE (B4) R, R-specB, R-SI Cruise, R-SICruise Limited, R-EyeSight, R-Ivory Leather Selection	**F1N019**	**TP-93**				**F2N015**	**A-475P**			
LEGACY TOURING WAGON レガシィ ツーリングワゴン												
1800	89.12-93.09	BF3 Mi, MiselectG	**SN794P**	**A-295P**				**Drum**				

cc	Year	Body Type	Front					Rear				
			Disc Pad	Seal Kit	Caliper		Piston	Disc Pad	Seal Kit	Caliper		Piston
					R	L				R	L	
LEGACY TOURING WAGON レガシィ ツーリングワゴン												
	89.12-93.09	BF3 Ti, Ti-S	**SN794P**	**TP-55**				**Drum**				
	89.12-93.09	BF3 Ti, Ti-S (ABS)	**SN794P**	**TP-55**				**F2N012**	**A-297P**			
	94.06-96.05	BG2, 3 LX	**SN794P**	**TP-55**				**Drum**				
	96.06-98.11	BG2, 3 LX	**F1N014**	**A-462P**				**Drum**				
	94.06-96.05	BG2, 3 LX (ABS)	**SN794P**	**TP-55**				**F2N012**	**A-297P**			
	96.06-98.11	BG2, 3 LX (ABS)	**F1N014**	**A-462P**				**F2N012**	**A-297P**			
2000	89.02-93.09	BFA, BF4, BF5 TZ, VZ, Brighton	**SN794P**	**TP-55**				**F2N012**	**A-297P**			
	89.10-93.09	BFA, BF4, BF5 GT, VZ-R	**F1N011**	**A-296P**				**F2N012**	**A-297P**			
	93.10-96.05	BGA Brighton, BrightonGold	**SN794P**	**TP-55**				**F2N012**	**A-297P**			
	96.06-98.11	BGA Brighton, BrightonGold	**F1N014**	**A-462P**				**F2N012**	**A-297P**			
	93.10-96.05	BG4 TX, TX-S, Brighton, BrightonGold	**SN794P**	**TP-55**				**Drum**				
	93.10-96.05	BG4 TX, TX-S, Brighton, BrightonGold (ABS)	**SN794P**	**TP-55**				**F2N012**	**A-297P**			
	96.06-98.11	BG4 TX-S, Brighton, BrightonGold	**F1N014**	**A-462P**				**F2N012**	**A-297P**			
	93.10-96.05	BG5 TX, TX-S, Brighton, BrightonGold	**SN794P**	**TP-55**				**Drum**				
	93.10-96.05	BG5 TX, TX-S, Brighton, BrightonGold (ABS)	**SN794P**	**TP-55**				**F2N012**	**A-297P**			
	96.06-98.11	BG5 TX-S, Brighton, BrightonGold	**F1N014**	**A-462P**				**F2N012**	**A-297P**			
	93.10-96.05	BG5 TS-R, TS-R-VLimited	**SN794P**	**TP-55**				**F2N012**	**A-297P**			
	96.06-97.07	BG5 TS-R, TS-R-VLimited	**F1N014**	**A-462P**				**F2N012**	**A-297P**			
	97.08-98.11	BG5 TS-R (16inch)	**F1N013**	**A-463P**				**F2N012**	**A-297P**			
	97.08-98.11	BG5 TS-R	**F1N014**	**A-462P**				**F2N012**	**C-297P**			
	93.10-96.05	BG5 GT, GT-B, GT-BⅡ, GTE, GT-VLimited	**F1N011**	**C-296P**				**F2N012**	**A-297P**			
	96.06-98.11	BG5 GT, GT-VLimited, GT-B, GT-BLimited	**F1N013**	**A-463P**				**F2N012**	**A-297P**			
	98.06-02.04	BH5 TX, TX-S, Brighton	**F1N014**	**A-462P**				**Drum**				
	02.04-03.04	BH5 TX, TX-S	**F1N020**	**A-462P**				**Drum**				
	98.06-03.04	BH5 TS-R, TS-RLimited, GT-VDC, GT, GTLimited, BrightonS, BrightonGold	**F1N013**	**A-463P**				**F2N015**	**A-475P**			
	98.06-03.04	BH5 GT-B (2POT)	**F1N013**	**A-463P**				**F2N015**	**A-475P**			
	01.05-03.04	BH5 GT-B (4POT)	**SN109P**	**SP109**			D9N001	**F2N015**	**A-475P**			
	03.05-09.02	BP5 i, i-CcasualEdition, i-Alcantara Selection, i-Bsports, i-Advantageline, i-Urbanselection, i-Brighton, i-Ivoryleatherselection, i-Smart Selection	**F1N018**	**TP-87**				**F2N022**	**TP-94**			
	03.05-09.02	BP5 R, R-Alcantaraselection, R-specB, R-Bsports, R-Ivory Leather Selection, GT-Customize Edition	**F1N042**	**TP-87**				**F2N022**	**TP-94**			
	03.05-09.02	BP5 GT, GT-Ⅱ, GT-SpecB, Blitzen, GT-Alcantara Selection, GT-SpecB-WRLimited, GT-Limited, GT-WRLimited, GT-Slcruise, GT-Ivory Lather Selection, GT-Smart Selection, GT-EteSight	**F1N019**	**TP-93**				**F2N015**	**A-475P**			
	05.03-09.02	BP5 GT-SpecB, tuned-by-STI(Brembo)										
	11.11-	BRG	**F1N019**	**TP-93**				**F2N037**				
2200	92.06-93.09	BFB, BF7, BGB, BG7 Brighton	**F1N011**	**A-296P**				**F2N012**	**A-297P**			
	93.10-96.05	BFB, BF7, BGB, BG7 Brighton	**SN794P**	**TP-55**				**F2N012**	**A-297P**			
2500	94.10-96.05	BGC, BG9 250T, 250T-G, V, GRW	**F1N011**	**C-296P**				**F2N012**	**A-297P**			
	96.06-98.11	BGC, BG9 250T, 250T-B, GRW, GRW-CR, Lancaster, LancasterLimited	**F1N013**	**A-463P**				**F2N012**	**A-297P**			
	98.06-01.04	BHC, BH9 250T, 250T-B, LancasterADA, LancasterSLimited	**F1N013**	**A-463P**				**F2N015**	**A-475P**			
	98.06-01.12	BHC, BH9 250S, Lancaster, LancasterS	**F1N013**	**A-463P**				**F2N015**	**A-475P**			
	02.01-03.04	BHC, BH9 Lancaster, LancasterS	**F1N042**	**TP-87**				**F2N015**	**A-475P**			

VDC…Vehicle Dymnamics Control

SUBARU

cc	Year	Body Type	Front					Rear				
			Disc Pad	Seal Kit	Caliper		Piston	Disc Pad	Seal Kit	Caliper		Piston
					R	L				R	L	
LEGACY TOURING WAGON レガシィ ツーリングワゴン												
	02.01-03.04	BHC, BH9 Lancaster, LancasterS(A/ T-VDC)	**F1N013**	**A-463P**				**F2N015**	**A-475P**			
	07.11-09.02	BP9 i, i-Urban Selection, i-Smart Selection, i-Premium LeatherLimited	**F1N042**	**TP-87**				**F2N022**	**TP-94**			
	08.03-09.02	BP9 i-SICruise	**F1N019**	**TP-93**				**F2N015**	**A-475P**			
	03.06-09.02	BP9 (OUTBACK)	**F1N042**	**TP-87**				**F2N022**	**TP-94**			
	08.05-09.02	BPH (OUTBACK) XT, XT-EyeSight, XT-Premium LeatherLimited	**F1N019**	**TP-93**				**F2N015**	**A-475P**			
	09.05-10.02	BR9 (OUTBACK) i, i-LPackage	**F1N042**	**TP-87**				**F2N022**	**TP-94**			
	10.02-	BR9 (OUTBACK) i, i-LPackage		**TP-87**				**F2N022**	**TP-94**			
	09.05-10.02	BR9 i, i-LPackage, EyeSight Sports Selection, EyeSight, i S StyleEye SightB Sports, EyeSight, B Sports, GPackage	**F1N018**	**TP-87**				**F2N022**	**TP-94**			
	09.05-10.02	BR9 i-SPackage, i LPackageLTD	**F1N042**	**TP-87**				**F2N022**	**TP-94**			
	10.02-10.10	BR9 I, SPackageLTD, GT, EyeSight, SPackage	**F1N019**	**TP-87**				**F2N037**				
	12.05-	BRM 2.5i, 2.5i LPackage, 2.5, EyeSight		**TP-87**					**TP-94**			
	12.05-	BRM 2.5i, EyeSight, SPackage	**F1N019**	**TP-93**				**F2N037**				
	14.07-	BS9 (OUTBACK)	**F1N019**	**TP-93**				**★F2N044**				
3000	00.05-03.04	BHE Lancaster6, Lancaster6ADA(VDC)	**F1N013**	**A-463P**				**F2N015**	**A-475P**			
	02.01-03.04	BHE Lancaster6, Lancaster6ADA	**F1N042**	**TP-87**				**F2N015**	**A-475P**			
	02.01-03.04	BHE GT30	**F1N013**	**A-463P**				**F2N015**	**A-475P**			
	03.09-09.02	BPE R, R-Ivory Leather Selection, R-ADA, R-ADA Ivory Leather, R-specB, R-SI CruiseLimited, R-EyeSight	**F1N019**	**TP-93**				**F2N015**	**A-475P**			
	03.10-09.02	BPE (OUTBACK) R, R-Ivory Leather Selection, R-LLBean Edition	**F1N042**	**TP-87**				**F2N022**	**TP-94**			
	07.05-09.02	BPE (OUTBACK) R-SI Cruise, R-EyeSight	**F1N019**	**TP-93**				**F2N015**	**A-475P**			
3600	09.05-	BRF (OUTBACK) R, R-SI Cruise	**F1N019**	**TP-93**								
LEONE レオーネ												
1600	84.07-94.03	AA2	**F1N008**	**A75P+A147BP**				**Drum**				
	84.07-94.03	AA3	**F1N008**	**A75P+A147BP**				**Drum**				
LEONE(Van) レオーネ(バン)												
1500	94.08-97.05	CVFY10	**SN585P**	**TP-13**				**Drum**				
	94.08-97.05	CVFY10 (ABS)	**SN798P**	**C-213P**				**Drum**				
	97.06-99.06	CVFY10, CVFNY10	**SN798P**	**C-213P**				**Drum**				
	99.06-04.05	VFY11	**B1N037**	**TP-81**				**Drum**				
1600	84.06-94.03	AP2, 3, 8, 9	**F1N008**	**A75P+A147BP**				**Drum**				
1700	94.08-99.06	CVSNY10	**SN798P**	**C-213P**				**Drum**				
1800	99.06-04.05	VHNY11	**B1N037**	**TP-81**				**Drum**				
2200	99.06-03.08	VENY11	**B1N037**	**TP-81**				**Drum**				
LEVORG レヴォーグ												
1600	14.02-	VM4		**TP-93**				**F2N022**	**TP-94**			
	14.02-	VM4(Eye-Sight)	**F1N019**	**TP-93**				**★F2N044**				
2000	14.02-	VMG	**F1N019**	**TP-93**				**★F2N044**				
LUCRA ルクラ												
660	10.04-12.05	L455F	**D1N046**	**C-608P**				**Drum**				
	12.05-	L455F	**SN943P**	**TP-80**				**Drum**				
	10.04-11.05	L455F (Turbo)	**SN910P**	**TP-80**				**Drum**				
	11.06-	L455F (Turbo)	**SN943P**	**TP-80**				**Drum**				
	10.04-11.05	L465F	**SN910P**	**TP-80**				**Drum**				

★発売予定

VDC…Vehicle Dymnamics Control

cc	Year	Body Type	Front					Rear				
			Disc Pad	Seal Kit	Caliper		Piston	Disc Pad	Seal Kit	Caliper		Piston
					R	L				R	L	
LUCRA ルクラ												
	11.06-	L465F	**SN943P**	**TP-80**				**Drum**				
PLEO プレオ												
660	98.10-10.04	RV1, 2	**F1N005**	**SP425**			F9N002	**Drum**				
	98.10-08.08	RA1, 2 (RS)	**F1N005**	**SP425**			F9N002	**B2N026**	**TP-43**			
	98.10-08.08	RA1, 2	**F1N005**	**SP425**			F9N002	**Drum**				
	10.04-	L275F, 285F	**D1N046**	**C-608P**				**Drum**				
PLEO PLUS プレオプラス												
660	12.12-	LA300F、LA310F	**D1N046**	**C608P**				**Drum**				
PLUGIN STELLA プラグイン ステラ												
EV	09.07-	PLUGIN	**SN693**	**TP-80**				**Drum**				
R1/2												
660	03.12-10.03	RC1, 2, RJ1, 2	**SN693**	**TP-80**				**Drum**				
REX レックス												
660	90.03-92.02	KH3, 4, KP3, 4	**SN766**	**TP-39**				**Drum**				
SAMBAR(Truck) サンバー(トラック)												
660	90.03-98.12	KS3, 4	**F1N003**	**MP-34**				**Drum**				
	99.01-04.08	TT1, 2 (AKABOU)	**SN681P**	**MP-97**				**Drum**				
	99.01-04.08	TT1, 2	**SN681**	**MP-97**				**Drum**				
	04.09-	TT1, 2	**SN441P**	**TP-89**				**Drum**				
	12.07-	S201J, S201H, S211J, S211H		**SP129**				**Drum**				
SAMBAR DIAS WAGON サンバー ディアスワゴン												
660	99.01-02.08	TW1, 2	**SN681**	**MP-97**				**Drum**				
SAMBAR DIAS WAGON サンバー ディアス7ワゴン												
660	02.09-09.08	TW1, 2	**SN432P**	**MP-97**				**Drum**				
SAMBAR (Van・PanelVan) サンバー (バン・パネルバン)												
660	90.03-98.12	KV3, 4	**F1N003**	**MP-34**				**Drum**				
	99.01-04.08	TV1, 2 (AKABOU)	**SN681P**	**MP-97**				**Drum**				
	99.01-04.08	TV1, 2	**SN681**	**MP-97**				**Drum**				
	04.09-	TV1, 2	**SN441P**	**TP-89**				**Drum**				
	12.07-	S321B, S321Q, S331B, S331Q	**SN145P**	**SP129**				**Drum**				
STELLA ステラ												
660	06.04-11.04	RN1, 2	**SN693**	**TP-80**				**Drum**				
	11.05-	LA110F	**D1N046**	**C-608P**				**Drum**				
	11.05-14.12	LA100.110F (ターボ無) 12インチディスク	**D1N046**	**C-608P**								
	11.05-14.12	LA100.110F (ターボ無) 13インチディスク	**SN943P**	**TP-80**								
	11.08-14.12	LA110F (Turbo)	**SN943P**	**TP-80**				**Drum**				
	14.11-	LA150F、160F	**SN214**	**TP-107**								
TRAVIQ トラヴィック												
2200	01.08-04.12	MX220										
TREZIA トレジア												
1300	10.11-	NSP120X	**SN939**	**SP455**				**Drum**				
1500	10.11-	NCP120X, NCP125X (Rear drum)	**SN939**	**SP455**			A9N088	**Drum**				
	10.11-	NCP120X, NCP125X (Rear disc)	**SN939**	**SP455**				**SN938P**	**TP-112**			
VIVIO ヴィヴィオ												
660	92.03-98.09	KK3, 4, KY3, KW3, 4	**SN658**	**SP423**			F9N001	**Drum**				
WRX S4												
2000	14.02-	VAG		**TP93**								
	14.02-	VAB	**SS690-S**					**SS691-S**				

SUBARU

cc	Year	Body Type	Front					Rear				
			Disc Pad	Seal Kit	Caliper		Piston	Disc Pad	Seal Kit	Caliper		Piston
					R	L				R	L	
WRX STI												
2000	07.10-	GRB, GVB WRX-STI(bremboキャリパ)	**SS690-s ※**					**SS691-s ※**				
	14.02-18.02	VAB(S207除く)	**SS690-s ※**					**SS691-s ※**				
	18.03-	VAB(S207除く)										
	14.02-	VAB(S207)										
2500	09.02-	GRF, GVF WRX-STI -A-Line(bremboキャリパ)	**SS690-s ※**					**SS691-s ※**				
	09.02-	GRF, GVF WRX-STI -A-Line(bremboキャリパ除)	**F1N019**	**TP-93**				**F2N037**				
XV												
1500	10.04-11.11	GH2(2WD) , GH3(4WD)	**SN227P**	**TP-87**				**F2N022**				
1600	17.03-	GT3						**★F2N044**				
2000	12.07-	GP7	**F1N018**	**TP-87**				**F2N022**	**TP-94**			
	17.03-	GT7						**★F2N044**				
	18.08-	GTE						**SN220P**				

★発売予定

SPECIFIC INDEX FOR DAIHATSU

CAR NAME	PAGE
ATRAI 7 アトレー7	114
ATRAI WAGON アトレー ワゴン	114
ALTIS アルティス	114
APPLAUSE アプローズ	114
BEGO ビーゴ	114
BOON ブーン	114
BOON LUMINAS ブーン ルミナス	114
CHARADE シャレード	114
COO クー	115
COPEN コペン	115
DELTA VAN デルタ バン	115
DELTA WAGON デルタ ワゴン	115
DELTA (V-Series Truck・dump) デルタ (V-シリーズ トラック・ダンプ)	115
DELTA (BU-Series Truck・dump) デルタ (BU-シリーズ トラック・ダンプ)	115
DELTA (RZU-Series Truck・dump) デルタ (RZU-シリーズ トラック・ダンプ)	116
DELTA (XZU-Series Truck・dump) デルタ (XZU-シリーズ トラック・ダンプ)	116
ESSE エッセ	117
HIJET/ ATRAI(Van・Truck) ハイゼット/アトレー (バン・トラック)	117
HIJET ELECTRIC VEHICLE ハイゼット電気自動車	117
HIJET GRAN CARGO ハイゼット グランカーゴ	117
LEEZA リーザ	117
MAX マックス	117
MEBIUS メビウス	118

CAR NAME	PAGE
MIRA ミラ	118
MIRA/ MIRA AVY/ MIRA CUSTOM ミラ/ ミラ アヴィ/ ミラ カスタム	118
MIRA COCOA ミラ ココア	118
MIRA e:s ミラ イース	118
MIRA GINO ミラ ジーノ	118
MIRA GINO 1000 ミラ ジーノ 1000	118
MIRA(Van) ミラ(バン)	118
MOVE/ MOVE CUSTOM ムーヴ/ ムーヴ カスタム	119
MOVE CONTE/ MOVE CONTE COSTOM ムーヴ コンテ/ ムーヴ コンテ カスタム	119
MOVE LATTE ムーヴ ラテ	119
NAKED ネイキッド	119
OPTI オプティ	119
PYZAR パイザー	120
ROCKY ロッキー	120
RUGGER ラガー	120
SONICA ソニカ	120
STORIA ストーリア	120
TANTO/ TANTO CUSTOM タント/ タント カスタム	120
TANTO Exe/ TANTO Exe CUSTOM タント Exe/ タント Exe カスタム	120
TERIOS テリオス	120
TERIOS KID/ LUCIA テリオス キッド/ ルキア	120
WAKE ウェイク	120
YRV	120

DAIHATSU

cc	Year	Body Type	Front					Rear				
			Disc Pad	Seal Kit	Caliper		Piston	Disc Pad	Seal Kit	Caliper		Piston
					R	L				R	L	
ATRAI 7 アトレー7												
1300	00.07-04.11	S221G, 231G	**G1N011**	**MP-59**				**Drum**				
	02.06-04.11	S221G, 231G(ABS, DVS) (CX Steering Shift)	**SN902P**	**MP-59**				**Drum**				
ATRAI WAGON アトレー ワゴン												
660	99.05-04.11	S220G, 230G	**SN676P**	**MP-59**				**Drum**				
	99.05-04.11	S220G, 230G(Turbo, ABS, 14inch)	**G1N011**	**MP-59**				**Drum**				
	05.04-05.11	S320G, 321G, 330G, 331G	**SN145P**	**SP103**				**Drum**				
	05.12-	S320G, 321G, 330G, 331G	**SN145P**	**SP129**				**Drum**				
2200	97.06-01.09	SXV25W	**A1N097**	**A-678P**				**SN648P**	**SP467**			
ALTIS アルティス												
2200	97.06-01.12	SXV25W	**A1N097**	**A-678P**				**SN648P**	**SP467**			
2400	01.09-06.01	ACV30N	**A1N073**	**SP443**				**A2N104**	**MP-100**			
	01.09-06.01	ACV35N	**A1N073**	**SP443**				**SN648P**	**SP456**			
	06.01-07.05	ACV40N	**A1N154**	**SP135**	A5R008	A5L008		**A2N130**	**SP134**			
	07.05-10.02	ACV40N	**A1N154**	**SP135**	A5R008	A5L008		**A2N130**				
	06.01-10.02	ACV45N	**A1N154**	**SP135**	A5R008	A5L008		**A2N104**	**MP-100**			
	07.05-10.02	ACV45N	**A1N154**	**SP135**	A5R008	A5L008		**A2N104**	**MP-100**			
2500	12.05-17.05	AVV50	**A1N154**	**SP443**				**A2N130**				
	17.06-	AXVH70N, AXVH75										
APPLAUSE アプローズ												
1600	89.06-00.05	A101S (Rear Drum)	**SN623P**	**A-243P**				**Drum**				
	89.06-00.05	A101S (Rear Disc)	**SN623P**	**A-243P**				**G2N010**				
	89.06-94.04	A111S	**SN623P**	**A-243P**				**Drum**				
BEGO ビーゴ												
1500	06.01-	J200G, 210G	**G1N005**	**SP297※1**				**Drum**				
BOON ブーン												
900	06.03-	M312S	**SN949P**	**TP-80**				**Drum**				
1000	04.04-05.04	M300S, 310S	**SN943P**	**TP-80**				**Drum**				
	05.05-	M300S, 310S	**SN943P**	**TP-80**				**Drum**				
	06.12-	M300S, 310S(Tire Size:175/ 65R14)	**A1N197**	**TP-103**				**Drum**				
	10.02-	M600S, 610S	**SN943P**	**TP-80**				**Drum**				
	10.02-	M610S(Tire Size 165/ 70R14)	**A1N197**	**TP-103**				**Drum**				
1300	04.04-05.04	M301S	**SN943P**	**TP-80**				**Drum**				
	05.05-	M301S	**SN943P**	**TP-80**				**Drum**				
	06.12-	M301STire Size 175/ 65R14)	**A1N197**	**TP-103**				**Drum**				
	10.02-	M601S	**SN943P**	**TP-80**				**Drum**				
BOON LUMINAS ブーン ルミナス												
1500	08.12-12.03	M502G	**A1N155**	**MP-119**				**Drum**				
	08.12-12.03	M502G (DVS) , M512G	**SN939**	**MP-120**				**Drum**				
CHARADE シャレード												
1000	87.01-93.01	G100S (GTTI, GTXX)	**SN623P**	**A-243P**					**MP-26**			
	87.01-90.11	G100S		**MP-24**				**Drum**				
	87.01-90.11	G100S (TR, CX Turbo)	**SN625P**	**MP-25**				**Drum**				
	87.01-93.01	G100S(TD, TL, CG, CD, SERGIO)		**MP-24**				**Drum**				
	90.11-91.11	G100S (WILL, KISA M/ T)		**MP-24**				**Drum**				
	91.12-93.01	G100S (WILL, KISA M/ T)	**SN625P**	**MP-25**				**Drum**				
	90.11-93.01	G100S (WILL, KISA A/ T)	**SN625P**	**MP-25**				**Drum**				
	87.11-91.11	G101S		**MP-24**				**Drum**				
	91.12-93.01	G101S	**SN625P**	**MP-25**				**Drum**				
1300	88.01-90.11	G102S (TR, CR)	**SN623P**	**A-243P**				**Drum**				

※1 J210 (E4AT.VSC(with DAC
DVS…Daihatsu Vehicle Stability control System

cc	Year	Body Type	Front					Rear				
			Disc Pad	Seal Kit	Caliper		Piston	Disc Pad	Seal Kit	Caliper		Piston
					R	L				R	L	
CHARADE シャレード												
	88.01-93.01	G102S , G112S	**SN625P**	**MP-25**				**Drum**				
	93.01-96.06	G200S	**SN835**	**A-414P**				**Drum**				
	96.06-00.05	G200S	**G1N017**	**A-414P**				**Drum**				
	93.01-96.06	G200S (ABS)	**SN835**	**A-414P**				**E2N032**	**A-415P**			
	96.06-00.05	G200S (ABS)	**G1N017**	**A-414P**				**E2N032**	**A-415P**			
1500	93.07-96.06	G203S, 213S	**SN835**	**A-414P**				**Drum**				
	96.06-00.05	G203S, 213S	**G1N017**	**A-414P**				**Drum**				
	93.07-96.06	G203S, 213S (ABS)	**SN835**	**A-414P**				**E2N032**	**A-415P**			
	96.06-00.05	G203S, 213S (ABS)	**G1N017**	**A-414P**				**E2N032**	**A-415P**			
1600	93.07-96.06	G201S	**SN835**	**A-414P**				**Drum**				
	96.06-98.07	G201S	**G1N017**	**A-414P**				**Drum**				
	93.07-96.06	G201S (ABS)	**SN835**	**A-414P**				**E2N032**	**A-415P**			
	96.06-98.07	G201S (ABS)	**G1N017**	**A-414P**				**E2N032**	**A-415P**			
COO クー												
1300	06.05-13.01	M401S, 411S	**SN949P**	**TP-80**				**Drum**				
1500	06.05-13.01	M402S	**SN949P**	**TP-80**				**Drum**				
COPEN コペン												
660	02.06-05.09	L880K	**G1N006**	**TP-80**				**Drum**				
	05.10-12.09	L880K	**SN949P**	**TP-80**				**Drum**				
	14.06-15.11	LA400K						**Drum**				
	15.12-	LA400K	**SN949P**									
DELTA VAN デルタ バン												
1500	96.10-98.12	KR41J	**A1N096**	**A-379P**				**Drum**				
1800	88.08-91.12	YB25V	**A1N078**	**C-226P**				**Drum**				
	92.01-96.09	YB25V	**SN827P**	**A-379P**				**Drum**				
	96.10-02.08	KR42J	**A1N096**	**A-379P**				**Drum**				
2000	88.08-91.12	CB27V	**A1N078**	**C-226P**				**Drum**				
	92.01-96.09	CB27V	**SN827P**	**A-379P**				**Drum**				
	96.10-98.12	CR41J	**A1N096**	**A-379P**				**Drum**				
	96.10-98.12	CR51J	**SN851P**	**A-379P**				**Drum**				
2200	99.01-02.08	CR42J	**A1N096**	**A-379P**				**Drum**				
	99.01-02.08	CR52J	**SN851P**	**A-379P**				**Drum**				
DELTA WAGON デルタ ワゴン												
2000	88.08-91.12	YB21G, B21G	**A1N078**	**C-226P**				**Drum**				
	92.01-96.09	YB21G, B21G	**SN827P**	**A-379P**				**Drum**				
	96.10-01.10	SR40N	**A1N096**	**A-379P**				**Drum**				
	98.01-98.12	SR50N	**SN851P**	**A-379P**				**Drum**				
	99.01-01.10	SR50N	**A1N096**	**A-379P**				**Drum**				
2200	93.09-96.09	CB22G	**SN827P**	**A-379P**				**Drum**				
	94.10-96.09	CB31G	**SN826P**	**A-239P**				**Drum**				
	96.10-01.10	CR40N	**A1N096**	**A-379P**				**Drum**				
	96.10-98.12	CR50N	**SN851P**	**A-379P**				**Drum**				
	99.01-01.10	CR50N	**A1N096**	**A-379P**				**Drum**				
DELTA (V-Series Truck・dump) デルタ (V-シリーズ トラック・ダンプ)												
3000	84.09-95.04	V98, 99						**Drum**				
3700	88.08-95.04	V118, 119						**Drum**				
DELTA (BU-Series Truck・dump) デルタ (BU-シリーズ トラック・ダンプ)												
3400	95.05-99.05	BU100N (Front Drum)						**Drum**				
	95.05-99.05	BU100N (Front Disc) FullJust Low	**SN650**	**MP-17**				**Drum**				

DAIHATSU

cc	Year	Body Type	Front					Rear				
			Disc Pad	Seal Kit	Caliper		Piston	Disc Pad	Seal Kit	Caliper		Piston
					R	L				R	L	
DELTA (BU-Series Truck・dump) デルタ (BU-シリーズ トラック・ダンプ)												
	95.05-99.05	BU100N (Front Disc) High FloorW Tire		**MP-8**				**Drum**				
	95.05-99.05	BU105N (Front Drum)						**Drum**				
	95.05-99.05	BU105N (Front Disc) High Floor	**A1N100**	**MP-8**				**Drum**				
	95.05-99.05	BU105N (Front Disc) Just Low, FullJust Low	**A1N060**	**MP-8**				**Drum**				
3700	99.05-03.08	BU301J, 300N (Front Disc) Low Floor, High Floor	**A1N060**	**SP438**				**Drum**				
	99.05-03.08	BU301J, 300N (Front Disc) FullJust Low	**A1N102**	**SP438**				**Drum**				
	99.05-03.08	BU346N (Front Disc) High Floor, Just Low	**A1N060**	**SP438**				**Drum**				
	99.05-03.08	BU346N (Front Disc) FullJust Low	**A1N102**	**SP438**				**Drum**				
4100	95.05-99.05	BU102N, 102J (Front Drum)						**Drum**				
	95.05-99.05	BU102N, 300J (Front Disc) FullJust Low2t	**SN650**	**MP-17**				**Drum**				
	95.05-99.05	BU102N, 300J (Front Disc) High Floor2t, 3t		**MP-8**				**Drum**				
	95.05-99.05	BU107N (Front Drum)						**Drum**				
	95.05-99.05	BU107N (Front Disc) High Floor	**A1N100**	**MP-8**				**Drum**				
	95.05-99.05	BU107N (Front Disc) Just Low, FullJust Low	**A1N060**	**MP-8**				**Drum**				
	95.05-99.05	BU112N (Front Drum)						**Drum**				
	95.05-99.05	BU112N (Front Disc)		**MP-8**				**Drum**				
	95.05-99.05	BU142N (Front Drum)						**Drum**				
	95.05-99.05	BU142N (Front Disc) High Floor		**MP-8**				**Drum**				
	95.05-99.05	BU142N (Front Disc) FullJust Low	**SN650**	**MP-17**				**Drum**				
	95.05-99.05	BU147N (Front Disc) High Floor	**A1N100**	**MP-8**				**Drum**				
	95.05-99.05	BU147N (Front Disc) Just Low, FullJust Low	**A1N060**	**MP-8**				**Drum**				
	95.05-99.05	BU162N, 172N, 212N, 212S, BU222N (Front Drum)						**Drum**				
	95.05-99.05	BU162N, 172N, 212N, 212S, BU222N (Front Disc)		**MP-8**				**Drum**				
	99.06-03.08	BU400N (Front Disc)	**A1N060**	**SP438**				**Drum**				
	99.06-03.08	BU410N, 420N, 430N(Front Drum)						**Drum**				
	99.06-03.08	BU410N, 420N(Front Disc)	**A1N060**	**SP438**				**Drum**				
DELTA (RZU-Series Truck・dump) デルタ (RZU-シリーズ トラック・ダンプ)												
2700	00.05-03.08	RZU300N (2t)	**A1N102**	**SP438**				**Drum**				
	00.05-03.08	RZU300N (3t)	**A1N060**	**SP438**				**Drum**				
	00.05-03.08	RZU340N	**A1N102**	**SP438**				**Drum**				
DELTA (XZU-Series Truck・dump) デルタ (XZU-シリーズ トラック・ダンプ)												
4600	99.06-03.08	XZU302J, 300N, 300P, 300UFullJust Low (2t)	**A1N102**	**SP438**				**Drum**				
	99.06-03.08	XZU302J, 300N, 300P, 300U, FullJust Low (2.95t, 3t)	**A1N060**	**SP438**				**Drum**				
	99.06-03.08	XZU307N, High Floor, Just Low	**A1N060**	**SP438**				**Drum**				
	99.06-03.08	XZU307N, 307Z, FullJust Low	**A1N102**	**SP438**				**Drum**				
	99.06-03.08	XZU322N, 322U	**A1N060**	**SP438**				**Drum**				
	99.06-03.08	XZU337N, Just Low	**A1N060**	**SP438**				**Drum**				
	99.06-03.08	XZU337N, FullJust Low	**A1N102**	**SP438**				**Drum**				
	99.06-03.08	XZU342N, 347N, High Floor, Just Low	**A1N060**	**SP438**				**Drum**				
	99.06-03.08	XZU342N, 347N, FullJust Low	**A1N102**	**SP438**				**Drum**				
	99.06-03.08	XZU352U	**A1N060**	**SP438**				**Drum**				
	99.06-03.08	XZU362J, 362N, 362U, XZU372N, 382N	**A1N100**	**SP438**				**Drum**				
	99.06-03.08	XZU402N, 412N, Just Low, FullJust Low (2t)	**A1N060**	**SP438**				**Drum**				
4900	99.06-03.08	XZU301J, 300N, 300P, 300U	**A1N060**	**SP438**				**Drum**				
	99.06-03.08	XZU306N, High Floor	**A1N060**	**SP438**				**Drum**				
	99.06-03.08	XZU306N, FullJust Low	**A1N102**	**SP438**				**Drum**				
	99.06-03.08	XZU311J, 300U (2t)	**A1N102**	**SP438**				**Drum**				

cc	Year	Body Type	Front					Rear				
			Disc Pad	Seal Kit	Caliper		Piston	Disc Pad	Seal Kit	Caliper		Piston
					R	L				R	L	
DELTA (XZU-Series Truck・dump) デルタ (XZU-シリーズ トラック・ダンプ)												
	99.06-03.08	XZU311J, 300U (3t)	**A1N060**	**SP438**				**Drum**				
	99.06-03.08	XZU321J, U, 331N, 341N	**A1N060**	**SP438**				**Drum**				
	99.06-03.08	XZU346N, High Floor	**A1N060**	**SP438**				**Drum**				
	99.06-03.08	XZU346N, FullJust Low	**A1N102**	**SP438**				**Drum**				
	99.06-03.08	XZU351U	**A1N060**	**SP438**				**Drum**				
	99.06-03.08	XZU371N	**A1N100**	**SP438**				**Drum**				
	99.06-03.08	XZU401N						**Drum**				
	99.06-03.08	XZU411N (2t)	**A1N060**	**SP438**				**Drum**				
	99.06-03.08	XZU411N (2.95t, 3t, 3.5t)						**Drum**				
5300	99.06-03.08	XZU300P	**A1N060**	**SP438**				**Drum**				
	99.06-03.08	XZU312U (2t)	**A1N102**	**SP438**				**Drum**				
	99.06-03.08	XZU312U (3t) XZU320J	**A1N060**	**SP438**				**Drum**				
	99.06-03.08	XZU330N (3t)	**A1N060**	**SP438**				**Drum**				
	99.06-03.08	XZU330N (4t)						**Drum**				
	99.06-03.08	XZU340N (3t)	**A1N060**	**SP438**				**Drum**				
	99.06-03.08	XZU340N (3.5t, 4t) XZU350P						**Drum**				
	99.06-03.08	XZU400J, 300N						**Drum**				
	99.06-03.08	XZU410N (2t)	**A1N060**	**SP438**				**Drum**				
	99.06-03.08	XZU410N (3t, 3.5t)						**Drum**				
	99.06-03.08	XZU421N (2t)	**A1N060**	**SP438**				**Drum**				
	99.06-03.08	XZU421N (3t) XZU420N, 430N						**Drum**				
ESSE エッセ												
660	05.11-11.09	L235S, 245S	**D1N046**	**C-608P**				**Drum**				
HIJET/ ATRAI(Van・Truck) ハイゼット/アトレー (バン・トラック)												
660	90.04-94.04	S82P, 82C, 83P, 83C, S82V, 82W, 83V, 83W(Front Drum)						**Drum**				
	90.04-94.04	S82P, 82C, 83P, 83C, S82V, 82W, 83V, 83W(Front Disc)	**SN233**	**SP103**			C9N002	**Drum**				
	94.01-98.12	S100C, 100CT, 100P, S110C, 110CT, 110P	**SN284P**	**SP284**				**Drum**				
	94.01-98.12	S100V, 100W, 110V, 110W, S120V, 130V, 140V	**G1N011**	**MP-59**				**Drum**				
	98.12-05.11	S200P, 200C, 210P, 210C	**SN103P**	**SP103**				**Drum**				
	05.11-07.12	S200P, 200C, 210P, 210C	**SN103P**	**SP129**				**Drum**				
	98.12-04.11	S200V, 210V, 220V, 230V	**SN676P**	**MP-59**				**Drum**				
	98.12-04.11	S220V, 230V(Turbo)	**G1N011**	**MP-59**				**Drum**				
	00.01-04.11	S200W, 210W	**SN676P**	**MP-59**				**Drum**				
	04.11-05.11	S320V, 330V	**SN145P**	**SP103**				**Drum**				
	05.12-	S320V, 330V	**SN145P**	**SP129**				**Drum**				
	07.12-	S321V, 321W, 331V, 331W	**SN145P**	**SP129**				**Drum**				
	07.12-	S201C, 211C, 201P, 211P	**SN103P**	**SP129**				**Drum**				
	14.07-	S500P, S510P	**SN103P**	**SP-129**				**Drum**				
HIJET ELECTRIC VEHICLE ハイゼット電気自動車												
EV	98.12-04.11	S200V	**G1N011**	**MP-59**				**Drum**				
HIJET GRAN CARGO ハイゼット グランカーゴ												
1300	01.07-04.11	S221V, 231V	**G1N011**	**MP-59**				**Drum**				
LEEZA リーザ												
660	90.08-92.07	L111S (Front Drum)						**Drum**				
	90.08-92.07	L111S, 111SK (Front Disc)	**G1N019**	**A-244P**				**Drum**				
MAX マックス												
660	01.11-02.07	L950S, 960S	**D1N046**	**A-496P**				**Drum**				

DAIHATSU

cc	Year	Body Type	Front					Rear				
			Disc Pad	Seal Kit	Caliper		Piston	Disc Pad	Seal Kit	Caliper		Piston
					R	L				R	L	
MAX マックス												
	02.08-05.12	L950S, 960S	**D1N046**	**C-608P**				**Drum**				
	01.11-03.08	L950S, 960S (Turbo Ri)	**G1N018**	**A-496P**				**Drum**				
	03.08-05.12	L950S, 960S (TurboRi)	**D1N046**	**C-608P**				**Drum**				
	01.11-05.12	L950S, 960S (TurboR)	**G1N018**	**A-496P**				**Drum**				
	01.11-05.12	L952S, 962S (RS, RSLimited)	**G1N018**	**A-496P**				**Drum**				
MEBIUS メビウス												
1800	13.4-	ZVW41N	**A1N128**	**SP135**					**SP414**			
MIRA ミラ												
660	90.03-91.05	L200S (TRXX AvanzatoR)	**G1N019**	**A-244P**				**Drum**				
	91.05-95.01	L200S (TRXX AvanzatoR)	**G1N015**	**A-414P**				**Drum**				
	90.03-95.01	L200S (Caliper Maker:SUMITOMO)	**SN233**	**SP103**			C9N002	**Drum**				
	90.03-94..04	L200S (Caliper Maker:AKEBONO)	**G1N019**	**A-244P**				**Drum**				
	94.04-95.01	L200S (Caliper Maker:AKEBONO)	**G1N019**	**C-244P**				**Drum**				
	90.08-94.08	L210S (RV4)	**G1N015**	**A-244P**				**Drum**				
	90.03-95.01	L210S (Caliper Maker:SUMITOMO)	**SN233**	**SP103**				**Drum**				
	90.03-94.04	L210S (Caliper Maker:AKEBONO)	**G1N019**	**A-244P**				**Drum**				
	94.04-95.01	L210S (Caliper Maker:AKEBONO)	**G1N019**	**C-244P**				**Drum**				
	90.04-93.07	L220S (Caliper Maker:SUMITOMO)	**SN233**	**SP103**				**Drum**				
	90.04-93.07	L220S (Caliper Maker:AKEBONO)	**G1N019**	**A-244P**				**Drum**				
	94.08-98.10	L500S (TRXX Avanzato R)	**G1N015**	**A-414P**				**Drum**				
	94.08-98.10	L500S (CL, Classic Turbo)	**G1N015**	**C-244P**				**Drum**				
	94.08-98.10	L500S (Caliper Maker:SUMITOMO)	**SN233**	**SP103**				**Drum**				
	94.08-98.10	L500S (Caliper Maker:AKEBONO)	**G1N019**	**C-244P**				**Drum**				
	94.08-98.08	L502S(TRXX Avanzato R) (13inchABS)	**G1N015**	**A-414P**				**E2N032**	**A-415P**			
	94.08-98.10	L502S (Caliper Maker:SUMITOMO)	**SN233**	**SP103**				**Drum**				
	94.08-98.10	L502S (Caliper Maker:AKEBONO)	**G1N019**	**C-244P**				**Drum**				
	94.08-98.08	L510S	**G1N019**	**C-244P**				**Drum**				
	97.08-98.08	L510S (Turbo)	**G1N015**	**C-244P**				**Drum**				
	94.08-98.08	L512S	**G1N015**	**A-414P**				**Drum**				
	98.08-02.12	L700S, 710S	**SN103P**	**SP103**				**Drum**				
	98.08-02.12	L700S, 710S (Turbo)	**G1N018**	**A-496P**				**Drum**				
MIRA/ MIRA AVY/ MIRA CUSTOM ミラ/ ミラ アヴィ/ ミラ カスタム												
660	02.12-	L250S, 260S, 275S, 285S	**D1N046**	**C-608P**				**Drum**				
	02.12-	L250S, 260S, 275S, 285S(DVS)	**SN943P**	**TP-80**				**Drum**				
MIRA COCOA ミラ ココア												
660	09.07-	L675S, 685S	**D1N046**	**C-608P**				**Drum**				
MIRA e:s ミラ イース												
660	11.09-	LA300S, LA310S	**D1N046**	**C-608P**				**Drum**				
MIRA GINO ミラ ジーノ												
660	99.02-04.10	L700S, 710S	**D1N046**	**A-496P**				**Drum**				
	99.02-02.08	L700S, 710S (Turbo)	**G1N018**	**A-496P**				**Drum**				
	02.08-04.10	L700S, 710S (Turbo)	**G1N018**	**C-608P**				**Drum**				
	04.11-09.03	L650S, 660S	**D1N046**	**C-608P**				**Drum**				
MIRA GINO 1000 ミラ ジーノ 1000												
1000	02.08-04.10	L701S, 711S	**G1N018**	**A-496P**				**Drum**				
MIRA(Van) ミラ(バン)												
660	90.03-94.08	L200V, 210V(Caliper Maker:SUMITOMO)	**SN233**	**SP103**				**Drum**				
	90.03-94.04	L200V, 210V(Caliper Maker:AKEBONO)	**G1N019**	**A-244P**				**Drum**				
	94.04-95.01	L200V, 210V(Caliper Maker:AKEBONO)	**G1N019**	**C-244P**				**Drum**				

DVS…Daihatsu Vehicle Stability control Syste

cc	Year	Body Type	Front					Rear				
			Disc Pad	Seal Kit	Caliper		Piston	Disc Pad	Seal Kit	Caliper		Piston
					R	L				R	L	
MIRA(Van) ミラ(バン)												
	94.08-98.08	L500V(Caliper Maker:SUMITOMO)	**SN233**	**SP103**				**Drum**				
	94.08-98.08	L500V (Caliper Maker:AKEBONO)	**G1N019**	**C-244P**				**Drum**				
	94.08-98.08	L510V	**G1N019**	**C-244P**				**Drum**				
	98.08-02.12	L700V, 710V	**SN103P**	**SP103**				**Drum**				
	02.12-07.10	L250V, 260V	**D1N046**	**C-608P**				**Drum**				
MOVE/ MOVE CUSTOM ムーヴ/ ムーヴ カスタム												
660	95.08-96.04	L600S	**G1N019**	**C-244P**				**Drum**				
	96.04-98.09	L600S	**G1N019**	**C-244P**				**Drum**				
	96.04-98.09	L600S (Turbo)	**G1N015**	**A-414P**				**Drum**				
	95.08-96.04	L602S	**G1N019**	**C-244P**				**Drum**				
	96.04-98.09	L602S	**G1N015**	**A-414P**				**Drum**				
	95.08-96.04	L610S	**G1N019**	**C-244P**				**Drum**				
	96.04-98.09	L610S	**G1N019**	**C-244P**				**Drum**				
	96.04-98.09	L610S (Turbo)	**G1N015**	**A-414P**				**Drum**				
	98.10-02.09	L900S	**D1N046**	**A-496P**				**Drum**				
	99.11-02.09	L900S (Turbo)	**G1N018**	**A-496P**				**Drum**				
	98.10-02.09	L902S	**G1N018**	**A-496P**				**Drum**				
	98.10-02.09	L910S (CL, CL-LTD, CL-CELC, PICO)	**D1N046**	**A-496P**				**Drum**				
	98.10-02.09	L910S	**G1N018**	**A-496P**				**Drum**				
	98.10-02.09	L910S (Turbo)	**G1N018**	**A-496P**				**Drum**				
	01.10-02.09	L912S	**G1N018**	**A-496P**				**Drum**				
	02.10-06.10	L150S, 160S	**D1N046**	**C-608P**				**Drum**				
	02.10-06.10	L150S, 160S (DVS, RS)	**SN943P**	**TP-80**				**Drum**				
	02.10-06.10	L152S	**SN943P**	**TP-80**				**Drum**				
	06.10-	L175S, 185S	**D1N046**	**C-608P**				**Drum**				
	06.10-	L175S, 185S (Turbo)	**SN943P**	**TP-80**				**Drum**				
	06.10-09.07	L175S (DVS)	**SN949P**	**TP-80**				**Drum**				
	10.12-12.12	LA100S, LA110S (X LTD)	**D1N046**	**C-608P**				**Drum**				
	10.12-	LA100S, LA110S (X)	**SN943P**	**TP-80**				**Drum**				
	14.11-	LA150S, 160S		**TP-107**				**Drum**				
MOVE CONTE/ MOVE CONTE COSTOM ムーヴ コンテ/ ムーヴ コンテ カスタム												
660	08.08-11.05	L575S, 585S	**D1N046**	**C-608P**				**Drum**				
	11.05-	L575S, 585S	**D1N046**	**C-608P**				**Drum**				
	08.09-11.06	L575S, 585S (RS)	**SN943P**	**TP-80**				**Drum**				
	11.06-	L585S (RS)	**SN943P**					**Drum**				
MOVE LATTE ムーヴ ラテ												
660	04.08-09.03	L550S	**D1N046**	**C-608P**				**Drum**				
	04.08-09.03	L560S	**D1N046**	**C-608P**				**Drum**				
	05.08-09.03	L560S (Turbo)	**SN943P**	**TP-80**				**Drum**				
NAKED ネイキッド												
660	99.11-02.07	L750S, 760S	**D1N046**	**A-496P**				**Drum**				
	02.07-03.12	L750S, 760S	**D1N046**	**C-608P**				**Drum**				
	99.11-03.12	L750S, 760S (Turbo)	**G1N018**	**A-496P**				**Drum**				
OPTI オプティ												
660	92.02-98.08	L300S (Caliper Maker:SUMITOMO)	**SN233**	**SP103**			C9N002	**Drum**				
	92.02-94.04	L300S (Caliper Maker:AKEBONO)	**G1N019**	**A-244P**				**Drum**				
	94.05-98.08	L300S (Caliper Maker:AKEBONO)	**G1N019**	**C-244P**				**Drum**				
	92.02-98.08	L310S	**SN233**	**SP103**			C9N002	**Drum**				
	98.11-02.08	L800S, 810S	**D1N046**	**A-496P※1**				**Drum**				

※1 Classic:A-496P or C-608P
DVS…Daihatsu Vehicle Stability control Syste

DAIHATSU

cc	Year	Body Type	Front					Rear				
			Disc Pad	Seal Kit	Caliper		Piston	Disc Pad	Seal Kit	Caliper		Piston
					R	L				R	L	
OPTI オプティ												
	00.02-02.08	L800S, 810S (Turbo)	**G1N018**	**A-496P※1**				**Drum**				
	98.11-00.09	L802S	**G1N018**	**A-496P**				**Drum**				
PYZAR パイザー												
1500	96.08-02.07	G303G	**G1N017**	**A-414P**				**Drum**				
	96.08-02.07	G303G (ABS)	**G1N017**	**A-414P**				**E2N032**	**A-415P**			
	96.08-97.08	G313G	**G1N017**	**A-414P**				**Drum**				
1600	97.09-02.07	G301G, 311G	**G1N017**	**A-414P**				**Drum**				
ROCKY ロッキー												
1600	90.07-97.05	F300S		**A-304P**				**Drum**				
RUGGER ラガー												
2800	89.10-93.04	F70, 71, 73, 75, 76, 78		**A-304P**				**Drum**				
SONICA ソニカ												
660	06.05-09.05	L405, 415 (R)	**D1N046**	**C-608P**				**Drum**				
	06.05-09.05	L405, 415 (RS, RSLimited)	**SN943P**	**TP-80**				**Drum**				
STORIA ストーリア												
700	98.01-04.05	M112S	**G1N018**	**A-496P**				**Drum**				
1000	98.01-04.05	M100S, 110S	**G1N018**	**A-496P**				**Drum**				
1300	00.05-04.05	M101S, 111S(CX, CZ, TORING)	**G1N018**	**A-496P**				**Drum**				
	01.12-04.05	M101S, 111S (CZ, TORING)	**G1N006**	**TP-80**				**Drum**				
TANTO/TANTO CUSTOM タント/タント カスタム												
660	03.11-07.12	L350S	**D1N046**	**C-608P**				**Drum**				
	03.11-07.12	L350S (Turbo)	**SN943P**	**TP-80**				**Drum**				
	03.11-07.12	L360S	**SN943P**	**TP-80**				**Drum**				
	07.12-	L375S	**D1N046**	**C-608P**				**Drum**				
	07.12-10.10	L375S (Turbo) , L385S	**SN943P**	**TP-80**				**Drum**				
	10.10-	L375S (Turbo)	**SN943P**	**TP-118**				**Drum**				
	10.10-	L385S	**SN943P**	**TP-80**				**Drum**				
	07.10-	L385S (Turbo)	**SN943P**	**TP-80**				**Drum**				
	13.09-	LA600S, 610S						**Drum**				
TANTO Exe/TANTO Exe CUSTOM タント Exe/タント Exe カスタム												
660	09.12-	L455S	**D1N046**	**C-608P**				**Drum**				
	09.12-	L455S (Turbo) , L465S	**SN943P**	**TP-80**				**Drum**				
TERIOS テリオス												
1300	97.03-05.12	J100G, 102G, 122G	**G1N005**	**SP297**				**Drum**				
TERIOS KID/LUCIA テリオス キッド/ルキア												
660	98.10-12.05	J111G, 131G	**G1N005**	**SP297**				**Drum**				
WAKE ウェイク												
660	14.10-	LA700S, LA710S		**TP-115**				**Drum**				
YRV												
1000	00.08-02.12	M200G	**G1N018**	**A-496P**				**Drum**				
1300	00.08-05.08	M201G, 211G	**G1N018**	**A-496P**				**Drum**				
	00.08-05.08	M201G, 211G (Turbo)	**G1N006**	**TP-80**				**Drum**				

※1 Classic:A-496P or C-608P

SPECIFIC INDEX FOR SUZUKI

CAR NAME	PAGE
AERIO エリオ	122
ALTO アルト	122
ALTO HUSTLE アルト ハッスル	122
ALTO LAPIN アルト ラパン	122
CAPPUCCINO カプチーノ	122
CULTUS カルタス	122
CARA キャラ	122
CARRY/ EVERY キャリイ/ エブリイ	122
CERVO MODE セルボ モード	123
CERVO セルボ	123
CULTUS CRESCENT カルタス クレセント	123
CULTUS CRESCENT(Wagon) カルタス クレセント(ワゴン)	123
CULTUS ESTEEM カルタス エスティーム	123
CHEVROLET CRUZE シボレー クルーズ	123
CHEVROLET MW シボレー MW	123
ESCUDO エスクード	123
EVERY WAGON エブリイ ワゴン	124
EVERY+/ EVERY LANDY エブリイ+(プラス)/ エブリイ ランディ	124
GRAND ESCUDO グランドエスクード	124
HUSTLER ハスラー	124

CAR NAME	PAGE
JIMNY ジムニー	124
JIMNY 1300 SIERRA/ WIDE ジムニー 1300 シエラ/ ワイド	124
IGNIS イグニス	124
Kei	124
KIZASHI キザシ	124
LANDY ランディ	124
MR WAGON MR ワゴン	124
PALETTE パレット	124
SPLASH スプラッシュ	124
SPACIA スペーシア	124
スペーシアギア SPACIA GEAR	124
SOLIO ソリオ	124
SWIFT スイフト	125
SX4	125
TWIN ツイン	125
WAGON R ワゴン R	125
WAGON R STINGRAY ワゴン R スティングレー	125
WAGON R SOLIO / SOLIO ワゴン R ソリオ / ソリオ	125
WAGON R WIDE/ PLUS ワゴン R ワイド / プラス	125
X-90	125

SUZUKI

cc	Year	Body Type	Front					Rear				
			Disc Pad	Seal Kit	Caliper		Piston	Disc Pad	Seal Kit	Caliper		Piston
					R	L				R	L	
AERIO エリオ												
1500	01.01-07.03	RA21S, RB21S	**SN684P**	**MP-109**				**Drum**				
1800	03.01-07.03	RC51S, RD51S	**SN684P**	**MP-109**				**Drum**				
ALTO アルト												
660	91.09-94.11	CL22V, CR22S	**H1N005**	**TP-13**				**Drum**				
	91.09-94.11	CR22S (DOHCTurbo)	**H1N014**	**MP-34**				**SN649**	**MP-56**			
	91.09-93.09	CR22S (SOHCTurbo Without Navi)	**H1N005**	**TP-13**				**Drum**				
	93.10-94.11	CR22S (SOHCTurbo Without Navi)	**H1N014**	**MP-34**				**Drum**				
	91.09-94.11	CR22S (SOHCTurbo With Navi)	**H1N014**	**MP-34**				**Drum**				
	91.09-93.10	CM22V, CS22S	**SN627**	**MP-35**				**Drum**				
	93.10-94.11	CM22V, CS22S	**H1N005**	**MP-34**				**Drum**				
	91.09-94.11	CM22V, CS22S (DOHCTurbo)	**H1N014**	**MP-34**				**SN649**	**MP-56**			
	91.09-93.10	CS22S (SOHCTurbo)	**SN627**	**MP-35**				**Drum**				
	93.10-94.11	CS22S (SOHCTurbo)	**H1N005**	**MP-34**				**Drum**				
	94.11-98.09	HC11V, HD11V	**H1N008**	**TP-80**				**Drum**				
	94.11-98.09	HA11S, HB11S	**H1N008**	**TP-80**				**Drum**				
	94.11-98.09	HA11S, HB11S (Turbo)	**H1N014**	**MP-34**				**Drum**				
	94.11-98.09	HA21S, HB21S	**H1N014**	**MP-34**				**SN649**	**MP-56**			
	98.10-00.12	HA12S, 12V	**H1N009**	**TP-80**				**Drum**				
	98.10-02.04	HA22S (Rear Drum)	**H1N009**	**TP-80**				**Drum**				
	98.10-02.04	HA22S (Rear Disc)	**H1N009**	**TP-80**				**C2N022**	**TP-91**			
	98.10-05.01	HA23S, 23V	**H1N009**	**TP-80**				**Drum**				
	04.09-09.12	HA24S, 24V	**SN935**	**TP-80**				**Drum**				
	09.12-	HA25	**H1N052**	**TP-80**				**Drum**				
	14.12-	HA36S		**TP-80**				**Drum**				
	14.12-	HA36S (Turbo)		**TP-80**				**Drum**				
	14.12-	HA36V		**TP-80**				**Drum**				
ALTO HUSTLE アルト ハッスル												
660	91.11-93.09	CL22V, CR22S	**H1N005**	**TP-13**				**Drum**				
	91.11-93.09	CM22V, CS22S	**SN627**	**MP-35**				**Drum**				
ALTO LAPIN アルト ラパン												
660	02.01-04.12	HE21S	**H1N009**	**TP-80**				**Drum**				
	05.01-08.11	HE21S	**SN935**	**TP-80**				**Drum**				
	02.01-05.11	HE21S (Turbo)	**H1N009**	**TP-80**				**Drum**				
	05.12-08.11	HE21S (Turbo)	**SN935**	**TP-80**				**Drum**				
	08.11-	HE22S	**H1N052**	**TP-80**				**Drum**				
CAPPUCCINO カプチーノ												
660	91.10-98.10	EA11R, 21R	**SN535P**	**TP-44**				**SN649**	**MP-56**			
CULTUS カルタス												
1000	88.09-00.05	AA44S, AB44S	**SN652P**	**MP-51**				**Drum**				
1300	88.09-00.05	AA34S, AF34S (GT-I)	**SN760P**	**TP-13**								
	88.09-00.05	AA34S, AF34S, AB34S (XL, XS, HIROKO KOSHINO)	**SN652P**	**MP-51**				**Drum**				
	92.01-00.05	AK34S	**SN760P**	**TP-13**				**Drum**				
1500	91.07-95.03	AH64S, AJ64S	**SN535P**	**TP-44**				**Drum**				
CARA キャラ												
660	93.01-96.05	PG6SS	**H1N005**	**TP-13**				**SN549P**				
CARRY/ EVERY キャリイ/ エブリイ												
660	91.09-99.01	DC51T, DD51T (Front Drum)						**Drum**				
	91.10-99.01	DC51T, DD51T (Front Disc)	**H1N006**	**MP-40**				**Drum**				

cc	Year	Body Type	Front					Rear				
			Disc Pad	Seal Kit	Caliper		Piston	Disc Pad	Seal Kit	Caliper		Piston
					R	L				R	L	
CARRY/EVERY キャリイ/エブリイ												
	91.09-99.01	DC51B, DD51B, DE51V, DF51V	**H1N006**	**MP-40**				**Drum**				
	99.01-05.08	DA52T, 52V, DB52T, 52V	**SN674**	**MP-91**				**Drum**				
	01.09-05.08	DA62V, 62T	**SN674**	**MP-91**				**Drum**				
	02.05-05.08	DA63T	**H1N009**	**TP-80**				**Drum**				
	05.08-	DA63T	**SN946**	**TP-80**				**Drum**				
	05.08-	DA64V, 65T	**SN946**	**TP-80**				**Drum**				
	13.09-	DA16	**H1N053**	**TP-80**				**Drum**				
	13.09-	DA16T	**H1N053**	**TP-80**								
	15.04-	DA17V	**H1N053**	**TP-80**								
CERVO MODE セルボ モード												
660	91.08-95.09	CN22S	**H1N005**	**TP-13**				**Drum**				
	93.10-97.04	CN22S, CP22S(SR-T)	**H1N014**	**MP-34**				**Drum**				
	95.10-97.04	CN22S, CP22S(WithoutSR-T, SR-F)	**H1N008**	**MP-80**				**Drum**				
	97.05-98.06	CN22S, CP22S(S, M, SR, Z)	**H1N008**	**TP-80**				**Drum**				
	91.08-93.09	CP22S (M, SM, S, SF, SG, SS, SR-T)	**SN627**	**MP-35**				**Drum**				
	93.10-95.09	CP22S(A, SL, SM, S, SA, SF, M)	**H1N005**	**TP-13**				**Drum**				
	93.10-95.09	CP22S(SR-T)	**H1N014**	**MP-34**				**Drum**				
	91.08-97.04	CN32S, CP32S(SR-F)	**H1N014**	**MP-34**				**SN649**	**MP-56**			
CERVO セルボ												
660	06.11-09.12	HG21S	**SN935**	**TP-80**				**Drum**				
CULTUS CRESCENT カルタス クレセント												
1300	95.01-00.05	GA11S	**SN652P**	**MP-51**				**Drum**				
	95.01-00.05	GA11S (ABS)	**H1N016**	**MP-101**				**Drum**				
1500	95.01-02.08	GA21S, GB21S, GC21S, GD21S	**H1N016**	**MP-101**				**Drum**				
1600	96.02-02.08	GB31S, GD31S	**H1N016**	**MP-101**				**Drum**				
CULTUS CRESCENT(Wagon) カルタス クレセント(ワゴン)												
1500	96.02-02.08	GC21W	**H1N016**	**MP-101**				**Drum**				
1600	96.02-02.08	GD31W	**H1N016**	**MP-101**				**Drum**				
1800	96.02-02.08	GC41W	**H1N016**	**MP-101**				**SN861**				
CULTUS ESTEEM カルタス エスティーム												
1500	91.07-95.03	AH64S, AJ64S	**SN535P**	**TP-44**				**Drum**				
1600	89.06-95.03	AH14S, AJ14S	**SN535P**	**TP-44**				**Drum**				
CHEVROLET CRUZE シボレー クルーズ												
1300	01.11-08.05	HR51S, 52S	**G1N006**	**TP-80**				**Drum**				
1500	02.12-06.05	HR81S, 82S	**G1N006**	**TP-80**				**Drum**				
CHEVROLET MW シボレー MW												
1300	06.01-	ME34S	**H1N020**	**MP-89**				**Drum**				
ESCUDO エスクード												
1600	90.08-97.11	TA01R, TA01W	**H1N058**	**TP-40**				**Drum**				
	90.09-00.12	TA02W, TD01W, 02W	**H1N059**	**TP-71**				**Drum**				
	06.06-08.06	TA74W	**H1N040**	**SP131**				**Drum**				
2000	94.12-00.04	TA11W, 31W, 51W, TD32W	**H1N001**	**SP291**				**Drum**				
	97.11-05.04	TA52W, TD52W	**H1N059**	**TP-71**				**Drum**				
	98.11-05.04	TL52W (G-LTD)	**H1N059**	**TP-71**				**Drum**				
	98.11-05.04	TL52W	**H1N001**	**SP291**				**Drum**				
	05.05-08.06	TD54W	**H1N040**	**SP131**				**Drum**				
2400	08.06-	TDA4W	**H1N040**	**SP131**					**C-745P**			
2500	96.10-05.04	TD61W, 62W	**H1N001**	**SP291**				**Drum**				
2700	05.05-08.06	TD94W	**H1N040**	**SP131**				**Drum**				

SUZUKI

cc	Year	Body Type	Front					Rear				
			Disc Pad	Seal Kit	Caliper		Piston	Disc Pad	Seal Kit	Caliper		Piston
					R	L				R	L	
ESCUDO エスクード												
3200	08.06-	TDB4W	**H1N040**	**SP131**					**C-745P**			
EVERY WAGON エブリイ ワゴン												
660	05.08-	DA64W	**SN946**	**TP-80**				**Drum**				
	15.04-	DA17W(WAGON)	**H1N053**	**TP-80**				**Drum**				
EVERY+/ EVERY LANDY エブリイ＋(プラス) / エブリイ ランディ												
1300	99.06-05.08	DA32W	**G1N006**	**TP-80**				**Drum**				
GRAND ESCUDO グランドエスクード												
2700	00.12-05.05	TX92W	**H1N001**	**SP291**				**Drum**				
HUSTLER ハスラー												
660	14.01-	MR31S	**H1N052**	**TP-80**				**Drum**				
JIMNY ジムニー												
660	90.03-98.10	JA11C, 11V, 12C, 12V, JA12W, 22W	**H1N011**	**MP-84**				**Drum**				
	98.10-	JB23W	**H1N011**	**MP-84**				**Drum**				
JIMNY 1300 SIERRA/ WIDE ジムニー 1300 シエラ/ ワイド												
1300	93.05-00.04	JB31W, 32W, 33W	**H1N011**	**MP-84**				**Drum**				
	00.04-	JB43W	**H1N011**	**MP-84**				**Drum**				
IGNIS イグニス												
1200	16.02-	FF21S	**SN949P**	**TP-80**								
Kei												
660	98.10-01.11	HN11S, 12S, 21S	**H1N009**	**TP-80**				**Drum**				
	01.04-04.11	HN22S	**H1N009**	**TP-80**				**Drum**				
	04.11-10.09	HN22S	**SN935 ※2**	**TP-80**				**Drum**				
	01.04-10.09	HN22S (Turbo)	**H1N009**	**TP-80**				**Drum**				
	02.11-10.09	HN22S (Works)	**H1N009**	**TP-80**				**C2N022**	**TP-91**			
KIZASHI キザシ												
2400	09.10-	RE91S, RF91S	**B1N094**					**C2N015**				
LANDY ランディ												
2000	07.01-	SC25, SNC25	**B1N077**	**TP-83**				**※1**	**A-654P**			
	12.08-	SC26, SNC26	**B1N077**	**TP-83**				**B2N096**	**A-654AP**			
MR WAGON MR ワゴン												
660	01.12-04.11	MF21S	**H1N009**	**TP-80**				**Drum**				
	04.12-06.01	MF21S	**SN935**	**TP-80**				**Drum**				
	02.06-05.11	MF21S (Turbo)	**H1N009**	**TP-80**				**Drum**				
	05.12-06.01	MF21S (Turbo)	**SN935**	**TP-80**				**Drum**				
	06.01-	MF22S	**SN935**	**TP-80**				**Drum**				
	11.01-	MF33S	**H1N052**	**TP-80**				**Drum**				
PALETTE パレット												
660	08.01-13.02	MK21S	**SN935**	**TP-80**				**Drum**				
SPLASH スプラッシュ												
1200	08.10-	XB32S	**H1N025**	**TP-81**				**Drum**				
SPACIA スペーシア												
660	03.05-	MK32S	**H1N052**	**TP-80**				**Drum**				
	15.05-	MK42S	**H1N052**	**TP-80**				**Drum**				
スペーシアギア SPACIA GEAR												
660	18.12-	MK53S(2WD)		**TP-80**								
	18.12-	MK53S(ターボ付, 4WD)	**SN949P**	**TP-80**								
SOLIO ソリオ												
1200	11.11-	MA15S		**TP-81**				**Drum**				
1201	15.08-	MA26S, 36S, 46S	**SN949P**	**TP-80**								

※1 SN891P-with Shim for retaining pin. SN505P-w/ o Shim for retaining pin.
※2 (C/ # 643168～) C/ #=Chassis Number

cc	Year	Body Type	Front					Rear				
			Disc Pad	Seal Kit	Caliper		Piston	Disc Pad	Seal Kit	Caliper		Piston
					R	L				R	L	
SWIFT スイフト												
1200	07.05-	ZC71S		**TP-81**				**Drum**				
	10.09-	ZC72S (XG, XL)		**TP-81**								
	10.09-	ZC72S (XS)	**A1N197**	**TP-81**				**H2N046**				
	10.09-	ZD72S	**A1N197**	**TP-81**				**H2N046**				
1300	00.02-05.11	HT51S	**G1N006**	**TP-80**				**Drum**				
	04.11-	ZC11S, ZD11S	**H1N025**	**TP-81**				**Drum**				
1500	03.06-04.11	HT81S	**G1N006**	**TP-80**				**SN913P**				
	04.11-	ZC21S, ZD21S	**H1N025**	**TP-81**				**Drum**				
1600	05.09-	ZC31S	**H1N025**	**TP-81**				**C2N015**				
	11.11-	ZC32S	**A1N197**	**TP-81**				**H2N046**				
SX4												
1500	06.07-	YA11S, YB11S, YC11S	**H1N041**	**TP-82**				**Drum**				
1600	15.02-	YA22S, YB22S							**TP-124**			
2000	06.07-	YA41S, YB41S	**H1N041**	**TP-82**				**C2N015**				
TWIN ツイン												
660	03.01-05.10	EC22S (HEV)	**H1N009**	**TP-80**				**Drum**				
WAGON R ワゴン R												
660	93.09-95.10	CT21S (Model-1, 2)	**H1N005**	**TP-13**				**Drum**				
	95.10-97.04	CT21S (Model-1, 2, 3)	**H1N008**	**TP-80**				**Drum**				
	93.09-97.04	CT21S (Model-1, 2, 3) (Turbo)	**H1N014**	**MP-34**				**Drum**				
	97.04-98.10	CT21S (Model-4)	**H1N008**	**TP-80**				**Drum**				
	97.04-98.10	CT21S (Model-4) (Turbo, ABS)	**H1N014**	**MP-34**				**Drum**				
	97.04-98.10	CT51S, CV51S (Model-4)	**H1N008**	**TP-80**				**Drum**				
	97.04-98.10	CT51S, CV51S (Model-4) (Turbo)	**H1N014**	**MP-34**				**Drum**				
	97.04-98.10	CT51S, CV51S(FX, FXC, SC WithoutABS)	**H1N008**	**TP-80**				**Drum**				
	97.04-98.10	CT51S, CV51S(FX, FXC, SC WithABS)	**H1N014**	**MP-34**				**Drum**				
	98.10-03.08	MC11S, 12S, 21S, 22S	**H1N009**	**TP-80**				**Drum**				
	03.09-08.09	MH21S, 22S	**SN935**	**TP-80**				**Drum**				
	08.09-	MH23S	**SN935**	**TP-80**				**Drum**				
	12.09-	MH34S	**H1N052**	**TP-80**				**Drum**				
	14.08-	MH44S	**H1N052**	**TP-80**				**Drum**				
	17.02-	MH35S		**TP-80**								
	17.02-	MH55S(HV)		**TP-80**								
	17.02-	MH55S(ターボ付)	**SN949P**	**TP-80**								
WAGON R STINGRAY ワゴン R スティングレー												
660	07.02-08.09	MH22S	**SN935**	**TP-80**				**Drum**				
	08.09-	MH23S	**SN935**	**TP-80**				**Drum**				
WAGON R SOLIO / SOLIO ワゴン R ソリオ / ソリオ												
1000	00.12-02.10	MA64S	**H1N020**	**MP-89**				**Drum**				
1200	11.01-04.04	MA15S		**TP-81**				**Drum**				
1300	00.12-04.04	MA34S	**H1N020**	**MP-89**				**Drum**				
WAGON R WIDE/PLUS ワゴン R ワイド / プラス												
1000	97.02-00.12	MA61S, 63S, MB61S	**H1N020**	**MP-89**				**Drum**				
X-90												
1600	95.10-97.12	LB11S	**H1N058**	**TP-40**				**Drum**				

SPECIFIC INDEX FOR ISUZU

CAR NAME	PAGE
ASKA アスカ	127
BIGHORN ビッグホーン	127
COMO コモ	127
ELF(NKR 93. 05～99. 04) エルフ	127
ELF (NKR 99. 04～) エルフ	127
ELF W Cab (NKR 99. 04～) エルフ W Cab	128
ELF (NKS) エルフ	128
ELF LNG (NKR) エルフ LNG仕様	128
ELF LPG(NKR) エルフ LPG仕様	128
ELF HYBRID (NKR) エルフ HV	128
ELF(NHR) エルフ	128
ELF(NHS) エルフ	129
ELF LPG (NHR) エルフ LPG仕様	129
ELF (NPR 93. 05～99. 04) エルフ	129
ELF (NPR 99. 04～) エルフ	129
ELF (NPR) W Cab エルフ W Cab	129
ELF(NPS) エルフ	129
ELF CNG (NPR) エルフ CNG仕様	130
ELF HYBRID (NPR) エルフ HV	130
ELF S Cab (NNR/ NPR 06. 12～) エルフ S Cab	130
ELF W Cab(NNR/ NPR 07. 02～) エルフ W Cab	130
ELF(NNS/ NPS 06. 12～) エルフ	130

CAR NAME	PAGE
ELF S Cab(NLR/ NMR 06. 11～) エルフ S Cab	130
ELF W Cab(NLR/ NMR 07. 02～) エルフ W Cab	131
ELF S/ W Cab(NLS/ NMS 06. 11～) エルフ S/ W Cab	131
ELF S Cab(NJR/ NKR 07. 02～) エルフ S Cab	131
ELF CNG(NJR/ NKR/ NLR/ NMR82 07. 07～) エルフ CNG仕様	131
ELF HYBRID(NJR/ NLR/ NMR 07. 07～) エルフ HV	131
ELF W Cab(NJR/ NKR 07. 02～) エルフ W Cab	132
ELF S/ W Cab(NJS/ NKS 07. 02～) エルフ S/ W Cab	132
ELF S/ W Cab(NHR 07. 02～) エルフ S/ W Cab	132
ELF S/ W Cab(NHS 07. 02～) エルフ S/ W Cab	132
ELF UT(VHR/ VKR) エルフ	132
ELF(RouteVan) エルフ	132
ELF (100) エルフ	132
FARGO (Wagon) / FILLY ファーゴ (ワゴン) / フィリー	133
FARGO(Van) ファーゴ(バン)	133
FARGO (Microbus・Ambulance) ファーゴ (マイクロバス・救急車)	133
FARGO (Truck) ファーゴ (トラック)	133
GEMINI ジェミニ	133
JOURNEY ジャーニー	133
MU/ MU WIZARD ミュー/ ミュー ウィザード	133
VEHI CROSS ビークロス	134

cc	Year	Body Type	Front					Rear				
			Disc Pad	Seal Kit	Caliper		Piston	Disc Pad	Seal Kit	Caliper		Piston
					R	L				R	L	
ASKA アスカ												
1800			**SN430P**	**TP-90**				**C2N015**	**TP-54**			
2000	94.03-02.03	CJ1	**SN418P**	**TP-53**				**Drum**				
	94.05-02.03	CJ1 (ABS)	**SN418P**	**TP-53**				**C2N015**	**TP-54**			
	97.09-02.03	CJ3	**C1N018**	**TP-53**				**C2N015**	**TP-54**			
BIGHORN ビッグホーン												
3000	98.02-	UBS73DW, 73GW	**J1N008**	**C-386P**				**J2N009**	**C-387P**			
3100	91.12-98.02	UBS69DW, 69GW	**J1N008**	**C-386P**				**J2N009**	**C-387P**			
3200	91.12-98.02	UBS25DW, 25GW	**J1N008**	**C-386P**				**J2N009**	**C-387P**			
3500	98.02-	UBS26DW, 26GW	**J1N008**	**C-386P**				**J2N009**	**C-387P**			
COMO コモ												
2000	01.05-07.07	JVPE25	**B1N235**	**A-665P**				**Drum**				
	07.07-	JVRE25	**B1N235**	**A-665P**				**Drum**				
	12.07-	JVR2E26						**Drum**				
2400	01.05-07.07	JQE25, JQGE25, JCQGE25, JDQGE25	**B1N235**	**A-665P**				**Drum**				
2500	07.07-	JCSGE25, JSGE25, JSE25, JDSGE25	**B1N235**	**A-665P**				**Drum**				
	12.07-	JCS4E26, JVW2E26, JCW4E26, JVW6E26, JCW8E26						**Drum**				
3000	01.05-	JCWGE25, JVWE25, JVWME25, JCWMGE25, JDWGE25, JDWMGE25	**B1N235**	**A-665P**				**Drum**				
ELF(NKR 93.05〜99.04) エルフ												
3100	93.05-99.04	NKR69 (Front Drum)						**Drum**				
	93.05-99.04	NKR69 (Front Disc) (Independent Suspending)	**SN836P**	**A-429P**				**Drum**				
	93.05-99.04	NKR69 (Front Disc)	**SN858P**	**A-522P**				**Drum**				
3600	93.05-95.04	NKR58, 63 (Front Drum)						**Drum**				
	93.05-95.04	NKR58, 63 (Front Disc) (Independent Suspending)	**SN836P**	**A-429P**				**Drum**				
	93.05-95.04	NKR58, 63 (Front Disc)	**SN858P**	**A-522P**				**Drum**				
4300	93.05-99.04	NKR66 (Front Drum)						**Drum**				
	93.05-99.04	NKR66 (Front Disc) (Independent Suspending)	**SN836P**	**A-429P**				**Drum**				
	93.05-99.04	NKR66 (Front Disc)	**SN858P**	**A-522P**				**Drum**				
4600	93.05-99.04	NKR71 (Front Drum)						**Drum**				
	95.04-99.04	NKR71 (Front Disc) (Independent Suspending)	**SN836P**	**A-429P**				**Drum**				
	95.04-99.04	NKR71 (Front Disc)	**SN858P**	**A-522P**				**Drum**				
ELF (NKR 99.04〜) エルフ												
3100	99.04-04.05	NKR69 (Front Drum)						**※1**	**※1**			
	99.04-04.05	NKR69C (Front Disc)	**SN836P**	**A-429P**				**※1**	**※1**			
	99.04-04.05	NKR69E (Front Disc) S Tire	**SN836P**	**A-429P**				**※1**	**※1**			
	99.04-04.05	NKR69E (Front Disc) (Independent Suspending)	**※2**	**※2**				**※1**	**※1**			
	99.04-04.05	NKR69E (Front Disc)	**※3**	**※3**				**※1**	**※1**			
4300	99.04-04.05	NKR66 (Front Drum)						**※1**	**※1**			
	99.04-04.05	NKR66 (Front Disc) (Independent Suspending)	**SN836P**	**A-429P**				**※1**	**※1**			
	99.04-04.05	NKR66 (Front Disc)	**※3**	**※3**				**※1**	**※1**			
4600	99.04-04.05	NKR71 (Front Drum)						**※1**	**※1**			
	99.04-04.05	NKR71 (Front Disc) (Independent Suspending)	**SN836P**	**A-429P**				**※1**	**※1**			
	99.04-04.05	NKR71 (Front Disc)	**※3**	**※3**				**※1**	**※1**			
4800	02.05-06.12	NKR81 (Front Drum)						**※1**	**※1**			
	02.05-06.12	NKR81 (Independent Suspending)	**SN836P**	**A-429P**				**※1**	**※1**			
	02.05-06.12	NKR81	**※2**	**※2**				**※1**	**※1**			
	04.05-06.12	NKR81	**※3**	**※3**				**※1**	**※1**			

※1 SN896/ C-617P or C-617AP or Drum
※2 SN836P/ A-429P or SN682P/ SP411

ISUZU

cc	Year	Body Type	Front					Rear				
			Disc Pad	Seal Kit	Caliper		Piston	Disc Pad	Seal Kit	Caliper		Piston
					R	L				R	L	
ELF (NKR 99.04～) エルフ												
5000	99.04-04.06	NKR72 (Front Drum)						**※1**	**※1**			
	99.04-04.06	NKR72 (Front Disc)	**※4**	**※4**				**※1**	**※1**			
ELF W Cab (NKR 99.04～) エルフ W Cab												
3100	99.04-04.05	NKR69 (Front Drum)						**※1**	**※1**			
	99.04-04.05	NKR69 (Front Disc)	**SN836P**	**A-429P**				**※1**	**※1**			
4300	99.04-04.05	NKR66 (Front Drum)						**※1**	**※1**			
	99.04-04.05	NKR66 (Front Disc) S Tire	**SN836P**	**A-429P**				**※1**	**※1**			
	99.04-04.05	NKR66 (Front Disc)	**※5**	**※5**				**※1**	**※1**			
4600	99.04-04.05	NKR71 (Front Drum)						**※1**	**※1**			
	99.04-04.05	NKR71 (Front Disc)	**※5**	**※5**				**※1**	**※1**			
	00.12-04.05	NKR71(Front and Rear Disc)	**J1N018**	**C-617P**				**※1**	**※1**			
	00.12-04.05	NKR71 (Front Disc)	**SN682P**					**※1**	**※1**			
	00.12-04.05	NKR71 (Front Disc) (Independent Suspending)	**SN836P**	**A-429P**				**※1**	**※1**			
4800	02.05-07.12	NKR81 (Front Drum)						**※1**	**※1**			
	02.05-04.05	NKR81 (Front Disc)	**※4**	**※4**				**※1**	**※1**			
	04.05-07.12	NKR81 (Front Disc)	**※6**	**※6**				**※1**	**※1**			
ELF (NKS) エルフ												
4300	93.07-99.04	NKS66 (Front Drum)						**Drum**				
	93.07-99.04	NKS66 (Front Disc)	**SN836P**	**A-429P**				**Drum**				
4600	93.07-04.05	NKS71 (Front Drum)						**Drum**				
	93.07-04.05	NKS71 (Front Disc)	**SN836P**	**A-429P**				**Drum**				
4800	02.06-06.12	NKS81 (Front Drum)						**Drum**				
	02.06-06.12	NKS81 (Front Disc)	**SN836P**	**A-429P**				**Drum**				
ELF LNG (NKR) エルフ LNG仕様												
4300	98.07-04.05	NKR66 (Front Drum)						**Drum**				
	98.07-02.03	NKR66 (Front Disc) (Independent Suspending)	**SN836P**	**A-429P**				**Drum**				
	98.07-00.05	NKR66 (Front Disc)	**SN858P**	**A-522P**				**Drum**				
	00.06-02.03	NKR66 (Front Disc)	**※7**	**※7**				**Drum**				
	02.04-	NKR81 (Front Disc)	**※4**	**※4**				**Drum**				
	04.06-	NKR81 (Front Drum)						**Drum**				
	04.06-	NKR81 (Front Disc)	**J1N018**	**C-617AP**				**Drum**				
4600	05.05-	NKR82 (Front Drum)						**Drum**				
	05.05-	NKR82 (Front Disc)	**J1N018**	**C-617AP**				**Drum**				
ELF LPG(NKR) エルフ LPG仕様												
4600	00.06-04.05	NKR71 (Front Drum)						**Drum**				
	00.06-04.05	NKR71 (Front Disc) (Independent Suspending)	**SN836P**	**A-429P**				**Drum**				
	00.06-02.03	NKR71 (Front Disc)	**※8**	**※8**				**Drum**				
	02.04-04.05	NKR71 (Front Disc)	**J1N018**	**C-617P**				**Drum**				
	04.06-	NKR81 (Front Disc) S Tire	**SN932**	**A-721P**				**Drum**				
	04.06-	NKR81 (Front Disc) W Tire	**J1N018**	**C-617AP**				**Drum**				
ELF HYBRID (NKR) エルフ HV												
4800	05.02-	NKR81	**※8**	**※8**				**Drum**				
ELF(NHR) エルフ												
3100	93.06-06.12	NHR69 (Front Drum)						**Drum**				
	93.06-00.11	NHR69 (Independent Suspending)	**SN841P**	**A-361P**				**Drum**				
	00.12-03.08	NHR69 (Independent Suspending)	**SN836P**	**A-429P**				**Drum**				
	97.04-03.08	NHR69	**SN841P**	**A-361P**				**Drum**				
	03.09-06.12	NHR69	**SN888**	**A-485P**				**Drum**				

※1 SN896/ C-617P or C-617AP or Drum ※4 SN682P/ SP411or SN896/ C-617P or C-617AP or SN836P/ A-429P ※7 SN896/ C-617P('04.05～C-617AP) or SN682P/ SP411
※10 SN896/ C-617AP or SN904/ A-656P※2 SN836P/ A-429P or SN682P/ SP411
※5 SN896/ C-61

cc	Year	Body Type	Front					Rear				
			Disc Pad	Seal Kit	Caliper		Piston	Disc Pad	Seal Kit	Caliper		Piston
					R	L				R	L	
ELF(NHS) エルフ												
3100	93.07-95.02	NHS69	**SN841P**	**A-361P**				**Drum**				
	95.03-02.05	NHS69	**SN836P**	**A-429P**				**Drum**				
	98.07-02.05	NHS69 (LPG)	**SN836P**	**A-429P**				**Drum**				
ELF LPG (NHR) エルフ LPG仕様												
3100	98.02-01.03	NHR69	**SN841P**	**A-361P**				**Drum**				
	01.04-04.05	NHR69	**SN836P**	**A-429P**				**Drum**				
	04.06-	NHR69	**SN888**	**A-485P**				**Drum**				
ELF (NPR 93.05～99.04) エルフ												
4300	93.05-99.04	NPR66 (Front Drum)						**Drum**				
	93.05-99.04	NPR66 (Front Disc)	**SN858P**	**A-522P**				**Drum**				
4600	95.03-99.04	NPR71 (Front Drum)						**Drum**				
	95.03-99.04	NPR71 (Front Disc)	**SN858P**	**A-522P**				**Drum**				
4800	93.05-99.04	NPR70 (Front Drum)						**Drum**				
	93.05-99.04	NPR70 (Front Disc)	**SN858P**	**A-522P**				**Drum**				
5000	97.04-99.04	NPR72 (Front Drum)						**Drum**				
	97.04-99.04	NPR72 (Front Disc)	**SN858P**	**A-522P**				**Drum**				
ELF (NPR 99.04～) エルフ												
4300	99.04-04.05	NPR66L (Front Drum)						**※1**	**※1**			
	99.04-04.05	NPR66L (Front Disc)	**※9**	**※9**				**※1**	**※1**			
4600	99.04-04.05	NPR71 (Front Drum)						**※1**	**※1**			
	99.04-04.05	NPR71 (Front Disc)	**※9**	**※9**				**※1**	**※1**			
4800	02.05-	NPR81 (Front Drum)						**※1**	**※1**			
	02.05-04.05	NPR81 (Front Disc) (3.5t)	**SN904**	**A-617P**				**※1**	**※1**			
	02.05-04.05	NPR81	**※9**	**※9**				**※1**	**※1**			
	04.06-06.12	NPR81 (2.0t)	**J1N018**	**C-617AP**				**※1**	**※1**			
	04.06-06.12	NPR81 (3.0t) (Independent Suspending, Full Flat low)	**SN904**	**A-656P**				**※1**	**※1**			
	04.06-06.12	NPR81 (3.0t) (Independent Suspending)	**J1N018**	**C-617AP**				**※1**	**※1**			
	04.06-06.12	NPR81 (3.0t) Independent Suspending, With ABS	**J1N018**	**C-617AP**				**※1**	**※1**			
	05.04-06.12	NPR81 (2.0t, 3.0t) Independent Suspending	**J1N018**	**C-617AP**				**※1**	**※1**			
	05.04-06.12	NPR81 (3.5t) Independent Suspending	**SN904**	**A-656P**				**※1**	**※1**			
	05.04-06.12	NPR81	**J1N018**	**C-617AP**				**※1**	**※1**			
5000	99.04-04.05	NPR72 (Front Drum)						**※1**	**※1**			
	99.04-04.05	NPR72 (Front Disc) (3.5t)	**SN904**	**A-617P**				**※1**	**※1**			
	99.04-04.05	NPR72	**※9**	**※9**				**※1**	**※1**			
5200	99.04-04.05	NPR75 (Front Drum)						**※1**	**※1**			
	99.04-04.05	NPR75 (Front Disc) (3.5t)	**SN904**	**A-617P**				**※1**	**※1**			
	99.04-04.05	NPR75	**※9**	**※9**				**※1**	**※1**			
ELF (NPR) W Cab エルフ W Cab												
4600	99.04-04.05	NPR71L (2.0t)	**SN682P**	**SP411**				**Drum**				
	99.04-04.05	NPR71L (2.75t) , NPR71P	**J1N018**	**C-617P**				**Drum**				
4800	02.05-04.05	NPR81 (2.0t) , Small W Tire	**SN682P**					**Drum**				
	02.05-04.05	NPR81 (2.75t) , W Tire	**J1N018**	**C-617P**				**Drum**				
	04.06-06.12	NPR81	**J1N018**	**C-617AP**				**Drum**				
ELF(NPS) エルフ												
4300	93.12-95.04	NPS66 (Front Drum)						**Drum**				
4600	95.04-02.06	NPS71 (Front Drum)						**Drum**				
4800	04.06-06.12	NPS81 (Front Drum)						**Drum**				
	04.06-06.12	NPS81 (Front Disc) 2.0t	**J1N018**	**C-617AP**				**Drum**				

※1 SN896/ C-617P or C-617AP or Drum ※4 SN682P/ SP411or SN896/ C-617P or C-617AP or SN836P/ A-429P ※7 SN896/ C-617P('04.05~C-617AP) or SN682P/ SP411
※10 SN896/ C-617AP or SN904/ A-656P※2 SN836P/ A-429P or SN682P/ SP411
※5 SN896/ C-61

ISUZU

cc	Year	Body Type	Front					Rear				
			Disc Pad	Seal Kit	Caliper		Piston	Disc Pad	Seal Kit	Caliper		Piston
					R	L				R	L	
ELF(NPS) エルフ												
	04.06-06.12	NPS81 (Front Disc) (3.5t, Short shassis)	**SN904**	**A-656P**				**Drum**				
5000	97.04-02.06	NPS72 (Front Drum)						**Drum**				
	02.10-02.06	NPS72 (Front Disc)	**※9**	**※9**				**Drum**				
ELF CNG (NPR) エルフ CNG仕様												
4300	98.07-	NPR71, 72 (Front Drum)						**Drum**				
	98.07-	NPR71, 72 (Front Disc)	**SN858P**	**A-522P**				**Drum**				
	00.06-	NPR71, 72 (Front Disc)	**※7**	**※7**				**Drum**				
	02.04-	NPR71, 72 (Front Disc)	**J1N018**	**C-617P**				**Drum**				
	04.06-	NPR81 (Front Drum)						**Drum**				
	04.06-	NPR81 (Front Disc)	**※7**	**※7**				**Drum**				
4600	05.02-	NPR82 (Front Drum)						**Drum**				
	05.02-	NPR82 (Front Disc)	**※7**	**※7**				**Drum**				
	02.08-	NPR72 (Front Drum)						**Drum**				
	02.08-	NPR72 (Front Disc)	**J1N018**	**C-617P**				**Drum**				
	04.06-	NPR81 (Front Drum)						**Drum**				
	04.06-	NPR81 (Front Disc) 2.0t	**J1N018**	**C-617AP**				**Drum**				
	04.06-	NPR81 (Front Disc) 3.0t	**SN904**	**A-656P**				**Drum**				
	07.07-	NPR82 (Front Drum)						**Drum**				
	07.07-	NPR82	**J1N018**	**C-617AP**				**Drum**				
	07.07-	NPR82 (Hydrau Assist Brake)	**SN904**	**A-656P**				**Drum**				
ELF HYBRID (NPR) エルフ HV												
3000	07.07-	NPR85 (Front Drum)						**Drum**				
	07.07-	NPR85	**J1N018**	**C-617AP**				**Drum**				
	07.07-	NPR85 (Hydrau Assist Brake)	**SN904**	**A-656P**				**Drum**				
4800	05.02-	NPR81	**※10**	**※10**				**Drum**				
ELF S Cab (NNR/ NPR 06.12～) エルフ S Cab												
3000	06.12-	NPR85 (Front Drum)						**Drum**				
	06.12-	NNR85	**J1N018**	**C-617AP**				**Drum**				
	06.12-	NPR85	**J1N018**	**C-617AP**				**Drum**				
	06.12-	NPR85 (Hydrau Assist Brake)	**SN904**	**A-656P**				**Drum**				
5200	06.12-	NPR75 (Front Drum)						**Drum**				
	06.12-	NPR75 (Hydrau Assist Brake)	**J1N018**	**C-617AP**				**Drum**				
	06.12-	NPR75	**SN904**	**A-656P**				**Drum**				
ELF W Cab(NNR/ NPR 07.02～) エルフ W Cab												
3000	07.02-	NNR85, NPR85	**J1N018**	**C-617AP**				**Drum**				
ELF(NNS/ NPS 06.12～) エルフ												
3000	06.12-09.01	NNS85, NPS85	**J1N018**	**C-617AP**				**Drum**				
	09.02-	NNS85	**J1N018**	**C-617AP**				**Drum**				
	09.02-	NPS85	**J1N018**	**C-617AP**				**Drum**				
	09.02-	NPS85 (Hydrau Assist Brake)	**SN904**	**A-656P**				**Drum**				
ELF S Cab(NLR/ NMR 06.11～) エルフ S Cab												
3000	06.11-	NMR85 (Front Drum)						**Drum**				
	06.11-	NLR85	**J1N018**	**C-617AP**				**Drum**				
	06.11-	NLR85 (Independent Suspending)	**SN932**	**A-721P**				**Drum**				
	06.11-	NMR85 (2.0t) (Independent Suspending) garbage Truck or Vacuum Car	**J1N018**	**C-617AP**				**Drum**				
	06.11-	NMR85 (2.0t) (Independent Suspending)	**SN932**	**A-721P**				**Drum**				
	06.11-	NMR85 (3.0t, 2.95t) (Independent Suspending)	**J1N018**	**C-617AP**				**Drum**				

※1 SN896/ C-617P or C-617AP or Drum ※4 SN682P/ SP411or SN896/ C-617P or C-617AP or SN836P/ A-429P ※7 SN896/ C-617P('04.05~C-617AP) or SN682P/ SP411
※10 SN896/ C-617AP or SN904/ A-656P※2 SN836P/ A-429P or SN682P/ SP411
※5 SN896/ C-61

cc	Year	Body Type	Front					Rear				
			Disc Pad	Seal Kit	Caliper		Piston	Disc Pad	Seal Kit	Caliper		Piston
					R	L				R	L	
ELF W Cab(NLR/ NMR 07.02～) エルフ W Cab												
3000	07.02-	NMR85 (Front Drum)						**Drum**				
	07.02-09.01	NLR85, NMR85	**J1N018**	**C-617AP**				**Drum**				
	09.02-	NMR85	**J1N018**	**C-617AP**				**Drum**				
	07.02-	NLR85 (Independent Suspending)	**SN932**	**A-721P**				**Drum**				
	07.02-	NMR85 (2.0t) (Independent Suspending)	**SN932**	**A-721P**				**Drum**				
	07.02-07.12	NMR85 (2.0t) (Independent Suspending) TPO Fly Wheel	**J1N018**	**C-617AP**				**Drum**				
	08.01-	NMR85 (2.0t) (Independent Suspending) Fire Engine	**J1N018**	**C-617AP**				**Drum**				
	08.01-	NMR85 (2.0t) (Independent Suspending)	**J1N018**	**C-617AP**				**Drum**				
	07.02-	NMR85 (3.0t) (Independent Suspending)	**J1N018**	**C-617AP**				**Drum**				
ELF S/ W Cab(NLS/ NMS 06.11～) エルフ S/ W Cab												
3000	06.11-07.12	NLS85, NMS85 (S Cab)	**SN932**	**A-721P**				**Drum**				
	07.02-07.12	NLS85 (W Cab) (Under GVW5.0t)	**SN932**	**A-721P**				**Drum**				
	07.02-07.12	NMS85 (W Cab) (Independent Suspending)	**SN932**	**A-721P**				**Drum**				
	07.02-07.12	NMS85 (W Cab) (Independent Suspending) PTO Fly Wheel	**J1N018**	**C-617AP**				**Drum**				
	08.01-09.02	NLS, NMS (S Cab) (Independent Suspending) NLS (W Cab) Independent Suspending	**SN932**	**A-721P**				**Drum**				
	08.01-	NMS85 (W Cab) (Independent Suspending)	**SN932**	**A-721P**				**Drum**				
	08.01-	NMS85 (W Cab) (Independent Suspending) Fire Engine	**J1N018**	**C-617AP**				**Drum**				
	08.01-	NMS85 (W Cab) (Independent Suspending) PTOFly Wheel,	**J1N018**	**C-617AP**				**Drum**				
	09.02-	NLS (S Cab) (Independent Suspending)	**SN932**	**A-721P**				**Drum**				
	09.02-	NMS (S Cab) (Independent Suspending)	**SN932**	**A-721P**				**Drum**				
	09.02-	NMS (S Cab) (Independent Suspending) High Work Car Chassis	**J1N018**	**C-617AP**				**Drum**				
ELF S Cab(NJR/ NKR 07.02～) エルフ S Cab												
3000	07.02-	NKR85 (Front Drum)						**Drum**				
	07.02-	NJR85, NKR85	**J1N018**	**C-617AP**				**Drum**				
	07.02-	NKR85 (2.0t) (Independent Suspending) PTOFly Wheel	**SN932**	**A-721P**				**Drum**				
	07.02-	NKR85 (2.0t) (Independent Suspending) PTOFly Wheel, Dump Chassis, garbage Truck or Vacuum Car, High Work Car Chassis	**J1N018**	**C-617AP**				**Drum**				
	07.02-	NKR85 (3.0t, 2.95t) (Over GVW 5.0t)	**J1N018**	**C-617AP**				**Drum**				
ELF CNG(NJR/ NKR/ NLR/ NMR82 07.07～) エルフ CNG仕様												
4600	07.07-	NKR82, NMR82 (Front Drum)						**Drum**				
	07.07-	NJR82, NKR82, NLR82, NMR82	**J1N018**	**C-617AP**				**Drum**				
	07.07-	NKR82, NMR82 (Independent Suspending)	**J1N018**	**C-617AP**				**Drum**				
	07.07-	NJR82, NLR82 (Independent Suspending)	**SN932**	**A-721P**				**Drum**				
ELF HYBRID(NJR/ NLR/ NMR 07.07～) エルフ HV												
3000	07.07-	NMR85 (Front Drum)						**Drum**				
	07.07-	NJR85, NLR85 (Independent Suspending)	**SN932**	**A-721P**				**Drum**				
	07.07-09.01	NMR85 (2.0t) (Independent Suspending) (Over GVW 5.0t)	**SN932**	**A-721P**				**Drum**				
	07.07-	NJR85, NLR85, NMR85	**J1N018**	**C-617AP**				**Drum**				

GVW=Gross Vehicle Weight

ISUZU

cc	Year	Body Type	Front					Rear				
			Disc Pad	Seal Kit	Caliper		Piston	Disc Pad	Seal Kit	Caliper		Piston
					R	L				R	L	
ELF HYBRID(NJR/ NLR/ NMR 07.07～) エルフ HV												
	07.07-	NMR85 (3.0t) (Independent Suspending) (Over GVW 5.0t)	**J1N018**	**C-617AP**				**Drum**				
	09.02-	NMR85 (2.0t) (Independent Suspending) (Over GVW 5.0t) garbage Truck or Vacuum	**J1N018**	**C-617AP**				**Drum**				
	09.02-	NMR85 (2.0t) (Independent Suspending) (Over GVW 5.0t)	**SN932**	**A-721P**				**Drum**				
ELF W Cab(NJR/ NKR 07.02～) エルフ W Cab												
3000	07.08-	NJR85	**J1N018**	**C-617AP**				**Drum**				
	09.02-	NKR85	**J1N018**	**C-617AP**				**Drum**				
	07.02-	NJR85 (Independent Suspending)	**SN932**	**A-721P**				**Drum**				
ELF S/ W Cab(NJS/ NKS 07.02～) エルフ S/ W Cab												
3000	07.02-	NJS85 (Independent Suspending) S Cab	**SN932**	**A-721P**				**Drum**				
	07.02-	NKS85 (2.0t) (Independent Suspending) S Cab	**SN932**	**A-721P**				**Drum**				
	07.02.-	NKS85 (2.0t) (Independent Suspending) S Cab (Dump Chassis)	**J1N018**	**C-617AP**				**Drum**				
	07.02-	NKS85 (3.0t) (Independent Suspending) , S Cab	**J1N018**	**C-617AP**				**Drum**				
	09.02-	NJS85 (Independent Suspending) W Cab	**SN932**	**A-721P**				**Drum**				
ELF S/ W Cab(NHR 07.02～) エルフ S/ W Cab												
3000	07.02-	NHR85 (Front Drum)						**Drum**				
	07.08-	NHR85 (S Cab)	**J1N018**	**C-617AP**				**Drum**				
	07.02-	NHR85 (Independent Suspending) (S/ W Cab)	**SN932**	**A-721P**				**Drum**				
ELF S/ W Cab(NHS 07.02～) エルフ S/ W Cab												
3000	07.02-	NHS85	**SN932**	**A-721P**				**Drum**				
ELF UT(VHR/ VKR) エルフ												
3100	96.11-02.05	VHR69	**SN841P**	**A-361P**				**Drum**				
4300	96.11-02.05	VKR66	**SN836P**	**A-429P**				**Drum**				
ELF(RouteVan) エルフ												
2800	93.12-99.04	WHR55	**SN841P**	**A-361P**				**Drum**				
3100	94.01-02.05	WHR69	**SN841P**	**A-361P**				**Drum**				
	94.01-02.05	WKR69	**SN836P**	**A-429P**				**Drum**				
ELF (100) エルフ												
2000	95.06-97.08	ASK2F23 (S CabS Tire 1t)	**SN225P**	**SP220**				**Drum**				
	97.08-99.06	ASK2F23 (S CabS Tire 1t)	**B1N004**	**SP220**				**Drum**				
	97.08-99.06	ASK2F23(Small WTire 1.25t, 1.5t) (Flat S Tire 1. 5t) (S TireHigh Floor 1.0t)	**B1N031**	**TP-15**				**Drum**				
	99.06-07.06	ASH2F23 (1.5t)	**B1N031**	**TP-15**				**Drum**				
	99.06-07.06	ASH4F23 (1.3t)	**B1N011**	**TP-78**				**Drum**				
	99.06-07.06	ASH4F23(S Cab 1.5t) (W Cab1.25t)	**B1N031**	**TP-15**				**Drum**				
	07.07-	ASQ1F24, ASQ2F24	**B1N235**	**A-665P**				**Drum**				
2500	95.06-97.08	ASN6F23(W CabS Tire 0.75t, 0.85t) (4WDのS CabS Tire 1.0t)	**B1N010**	**TP-78**				**Drum**				
	97.08-99.06	ASN6F23(W CabS Tire 0.75t, 0.85t) (4WDのS CabS Tire 1.0t)	**B1N011**	**TP-78**				**Drum**				
	95.06-97.08	ASN2F23(2WD S Cab 1.0t)	**SN574**	**TP-78**				**Drum**				
	97.08-99.06	ASN2F23(2WD S Cab 1.0t)	**B1N004**	**SP220**				**Drum**				
2700	95.06-97.08	ASP8F23	**SN574**	**TP-15**				**Drum**				
	99.06-04.08	ASP2F23, 6F23	**B1N011**	**TP-78**				**Drum**				
3000	07.07-	ASQ1F24, ASQ2F24, ASZ1F24, ASZ2F24, ASZ4F24, ASZ5F24	**B1N235**	**A-665P**				**Drum**				

GVW=Gross Vehicle Weight

cc	Year	Body Type	Front					Rear				
			Disc Pad	Seal Kit	Caliper		Piston	Disc Pad	Seal Kit	Caliper		Piston
					R	L				R	L	
ELF (100) エルフ												
3200	97.08-07.06	ASR2F23, 4F23, 8F23	**B1N031**	**TP-15**				**Drum**				
FARGO (Wagon) / FILLY ファーゴ (ワゴン) / フィリー												
2400	90.12-95.08	WFR62, WFS62	**SN230**	**SP230**				**Drum**				
2700	95.08-97.05	JARE24, JARME24	**B1N011**	**TP-78**				**Drum**				
	95.08-99.06	JKRGE24, JKRMGE24	**B1N010**	**TP-78**				**Drum**				
3000	99.08-02.05	JATE50, JATWE50	**B1N062**	**A-450P**				**Drum**				
3200	97.07-99.09	JAVE50, JAVWE50	**B1N062**	**A-450P**				**Drum**				
3300	98.10-99.09	JALWE50	**B1N062**	**A-450P**				**Drum**				
	98.10-00.10	JALE50	**B1N062**	**A-450P**				**Drum**				
3500	00.10-02.05	JAPE50, JAPWE50	**B1N062**	**A-450P**				**Drum**				
FARGO(Van) ファーゴ(バン)												
2000	85.12-95.08	WFR12	**SN230**	**SP230**				**Drum**				
	96.06-99.06	JVTGE24	**B1N010**	**TP-78**				**Drum**				
	99.06-01.05	JVPE24, JVPGE24, JCPGE24	**B1N062**	**A-450P**				**Drum**				
2400	87.10-95.08	WFR62, WFS62	**SN230**	**SP230**				**Drum**				
	99.06-01.05	JCQGE24	**B1N062**	**A-450P**				**Drum**				
2700	95.08-97.05	JVRE24, JVRGE24, JVRME24, JVRMGE24, JCRGE24, JCRMGE24	**B1N010**	**TP-78**				**Drum**				
3200	96.08-99.06	JCWGE24, JCWBE24, JCWMBE24, JCWMGE24, JVWE24, JVWGE24, JVWME24, JVWMGE24	**B1N010**	**TP-78**				**Drum**				
	99.06-01.05	JCWGE24, JCWMGE24, JVWE24, JVWGE24, JVWME24, JVWMGE24	**B1N062**	**A-450P**				**Drum**				
FARGO (Microbus・Ambulance) ファーゴ (マイクロバス・救急車)												
2700	96.08-97.05	JDRGE24, JDRMGE24	**B1N010**	**TP-78**				**Drum**				
3000	95.08-99.06	JFEGE24	**B1N011**	**TP-78**				**Drum**				
	99.06-01.05	JCEGE24	**B1N011**	**TP-78**				**Drum**				
3200	99.06-01.05	JDWGE24, JDWMGE24	**B1N010**	**TP-78**				**Drum**				
FARGO (Truck) ファーゴ (トラック)												
2000	88.09-94.06	NFR12	**SN230**	**SP230**				**Drum**				
GEMINI ジェミニ												
1500	95.02-00.06	MJ3, 4	**C1N020**	**TP-67**				**Drum**				
1600	93.08-98.03	MJ1	**C1N020**	**TP-67**				**Drum**				
	93.08-98.03	MJ1 (ABS)	**C1N016**	**TP-68**				**C2N022**	**TP-34**			
	93.08-98.03	MJ2	**C1N020**	**TP-67**				**Drum**				
	93.08-98.03	MJ2 (ABS)	**C1N016**	**TP-68**				**Drum**				
	97.01-00.06	MJ5	**C1N020**	**TP-67**				**Drum**				
	97.01-00.06	MJ6	**C1N016**	**TP-68**				**Drum**				
2400	88.09-94.06	NFR62, NFS62	**SN230**	**SP230**				**Drum**				
JOURNEY ジャーニー												
3000	07.08-	SEJW41, SEHW41, SECW41, SEVW41 (AT/ 4F)	**J1N018**	**A-617P**				**Drum**				
	08.06-	SEJW41, SEHW41, SECW41, SEVW41 (MT/ 5F)	**SN118**	**SP410**				**Drum**				
4200	99.02-04.08	SBVW41, SBHW41, SBCW41, SBJW41	**SN881**	**A-617P**				**Drum**				
4500	04.09-	SDCW41, SDVW41, SDJW41, SDHW41	**J1N018**	**A-617P**				**Drum**				
4900	04.10-07.08	SEHW41 (Infant car)	**J1N018**	**A-617P**				**Drum**				
	04.10-07.08	SEHW41, SEJW41, SECW41, SEVW41	**SN118**	**SP410**				**Drum**				
MU/ MU WIZARD ミュー/ ミュー ウィザード												
3000	98.05-99.10	UES73EW, 73FW	**SN886P**	**C-386P**				**J2N016**	**C-387P**			
	99.11-	UES73EW, 73FW	**J1N008**	**C-386P**				**J2N009**	**C-387P**			
3100	93.10-98.07	UCS69DWM, 69GW	**J1N008**	**C-386P**				**J2N009**	**C-387P**			

ISUZU

cc	Year	Body Type	Front					Rear				
			Disc Pad	Seal Kit	Caliper		Piston	Disc Pad	Seal Kit	Caliper		Piston
					R	L				R	L	
MU/MU WIZARD ミュー/ミュー ウィザード												
3200	98.05-99.10	UER25FW	**SN886P**	**C-386P**				**Drum**				
	99.11-	UER25FW	**J1N008**	**C-386P**				**Drum**				
	98.05-99.10	UES25EW, 25FW	**SN886P**	**C-386P**				**J2N016**	**C-387P**			
	99.11-	UES25EW, 25FW	**J1N008**	**C-386P**				**J2N009**	**C-387P**			
VEHI CROSS ビークロス												
3200	97.05-99.02	UGS25DW	**J1N008**	**C-386P**				**SN829P**	**C-387P**			

SPECIFIC INDEX FOR HINO

CAR NAME	PAGE
DUTRO(BU3##, 4##) デュトロ(BU3##, 4##)	136
DUTRO(BZU3##, 4##) デュトロ(BZU3##, 4##)	136
DUTRO(RZU3##, 4##) デュトロ(RZU3##, 4##)	136
DUTRO(XZU3##, 4##) デュトロ(XZU3##, 4##)	136

CAR NAME	PAGE
RANGER(BU1##) レンジャー(BU1##)	137
RANGER(BU1##, 2##) レンジャー(BU1##, 2##)	137
RIESSE リエッセ	137
RIESSE Ⅱ リエッセ Ⅱ	137

HINO

cc	Year	Body Type	Front					Rear				
			Disc Pad	Seal Kit	Caliper		Piston	Disc Pad	Seal Kit	Caliper		Piston
					R	L				R	L	
DUTRO(BU3##, 4##) デュトロ(BU3##, 4##)												
3700	99.05-04.06	BU301M, 301X, 306Y, 346M, Van, FullJust Low	**A1N102**	**SP438**				**Drum**				
4100	99.08-04.06	BU400M, 410M, 420M, 2t	**A1N060**	**SP438**				**Drum**				
	99.08-04.06	BU410M, 420M, 430M, 3t, 3.5t, 4t						**Drum**				
DUTRO(BZU3##, 4##) デュトロ(BZU3##, 4##)												
4100	03.06-	BZU300M, 300X (2t)	**A1N102**	**SP438**				**Drum**				
	03.06-	BZU300M (3t)	**A1N060**	**SP438**				**Drum**				
	03.06-	BZU340M	**A1N102**	**SP438**				**Drum**				
	03.06-	BZU410M	**A1N060**	**SP438**				**Drum**				
DUTRO(RZU3##, 4##) デュトロ(RZU3##, 4##)												
2700	00.05-	RZU300M, 300X (2t)	**A1N102**	**SP438**				**Drum**				
	00.05-	RZU300M (3t)	**A1N060**	**SP438**				**Drum**				
	00.05-	RZU301M, 340M	**A1N102**	**SP438**				**Drum**				
DUTRO(XZU3##, 4##) デュトロ(XZU3##, 4##)												
4000	03.10-	XZU304E, 344M (2t)	**A1N102**	**SP438**				**Drum**				
	03.10-	XZU304M, 344M (1.75t, 3t)	**A1N060**	**SP438**				**Drum**				
	04.06-	XZU308 (High Floor, Just Low)	**A1N060**	**SP438**				**Drum**				
	04.06-	XZU308 (FullJust Low)	**A1N102**	**SP438**				**Drum**				
	04.06-	XZU308Y, 314T, 354T	**A1N102**	**SP438**				**Drum**				
	04.06-	XZU334M, 344M (2t)	**A1N102**	**SP438**				**Drum**				
	04.06-	XZU334M, 344M (3t)	**A1N060**	**SP438**				**Drum**				
	04.06-	XZU334M, 344M, 354E (3.5t, 4t)	**J1N018**	**C-617AP**				**SN896**	**C-617AP**			
	04.06-	XZU338M, 348M (Just Low)	**A1N060**	**SP438**				**Drum**				
	04.06-	XZU338M, 348M (FullJust Low)	**A1N102**	**SP438**				**Drum**				
	04.06-	XZU368M, 368T, 378M	**A1N060**	**SP438**				**Drum**				
	04.06-	XZU388 (Normal Cab)	**A1N060**	**SP438**				**Drum**				
	04.06-	XZU388 (Wide Cab)	**J1N018**	**C-617AP**				**Drum**				
	04.05-	XZU404M, 404X, 424M						**Drum**				
	03.10-	XZU414 (3.5t, 4t)						**Drum**				
	03.10-	XZU414 (2t)	**A1N060**	**SP438**				**Drum**				
	03.10-	XZU414 (3t)	**J1N018**	**C-617AP**				**SN896**	**C-617AP**			
	03.10-	XZU415 (2t, 3.5t)						**Drum**				
	03.10-	XZU415 (3t)	**J1N018**	**C-617AP**				**SN896**	**C-617AP**			
	04.05-	XZU424 (3t, 3.5t, 4t)	**J1N018**	**C-617AP**				**SN896**	**C-617AP**			
4600	99.05-04.06	XZU307, Just Low, High Floor	**A1N060**	**SP438**				**Drum**				
	99.05-04.06	XZU307, Van, FullJust Low	**A1N102**	**SP438**				**Drum**				
	99.05-04.06	XZU312D	**A1N102**	**SP438**				**Drum**				
	99.05-04.06	XZU322, 322D	**A1N060**	**SP438**				**Drum**				
	99.05-04.06	XZU337, Just Low	**A1N060**	**SP438**				**Drum**				
	99.05-04.06	XZU337, FullJust Low	**A1N102**	**SP438**				**Drum**				
	01.08-04.06	XZU342, High Floor	**A1N060**	**SP438**				**Drum**				
	01.08-04.06	XZU342, FullJust Low	**A1N100**	**SP438**				**Drum**				
	99.05-04.06	XZU347, Just Low, High Floor	**A1N060**	**SP438**				**Drum**				
	99.05-04.06	XZU347, FullJust Low	**A1N102**	**SP438**				**Drum**				
	99.05-04.06	XZU352D, Just Low	**A1N060**	**SP438**				**Drum**				
	99.05-04.06	XZU352D, FullJust Low	**A1N102**	**SP438**				**Drum**				
	99.07-04.06	XZU362, 362A, 362D, 372, 382	**A1N100**	**SP438**				**Drum**				
	99.05-04.06	XZU402	**A1N060**	**SP438**				**Drum**				
	99.05-04.06	XZU412 (3t)						**Drum**				
	99.05-04.06	XZU412 (2t)	**A1N060**	**SP438**				**Drum**				

cc	Year	Body Type	Front					Rear				
			Disc Pad	Seal Kit	Caliper		Piston	Disc Pad	Seal Kit	Caliper		Piston
					R	L				R	L	
RANGER(BU1##) レンジャー(BU1##)												
3400	96.09-	BU100 (Front Drum) Dump FullJust Low, W Cab FullJust Low						**Drum**				
	96.09-	BU100Dump Just Low, W Cab Just Low, High Floor Drop Side Gate S Tire, Truck Just Low						**Drum**				
	96.09-	BU100, High FloorDrop Side Gate W Tire						**Drum**				
	96.09-	BU100 (Front Disc) Truck FullJust Low	**SN650**	**MP-17**				**Drum**				
	96.09-	BU100, High FloorDrop Side Gate W Tire		**MP-18**				**Drum**				
4100	96.09-	BU107	**A1N060**	**SP444**				**Drum**				
RANGER(BU1##, 2##) レンジャー(BU1##, 2##)												
4100	96.09-	BU102 (Front Drum) Wcab FullJust Low, Dump FullJust Low						**Drum**				
	96.09-	BU102, Dump Just Low, W Cab Just Low, Truck Just Low, High FloorDrop Side Gate S Tire						**Drum**				
	96.09-	BU102, Dump(Drop Side) W Tire						**Drum**				
	96.09-	BU102 (Front Disc) Truck FullJust Low	**SN650**	**MP-17**				**Drum**				
	96.09-	BU102, Reinforced Dump Wtire , High FloorDrop Side GateのW Tire, Wood High Floor W Tire		**MP-18**				**Drum**				
	95.05-	BU112 (Front Drum)						**Drum**				
	96.09-	BU112 (Front Disc)		**MP-8**				**Drum**				
	96.09-	BU142 (Front Drum) Just Low(Dump)						**Drum**				
	96.09-	BU142, FullJust Low(Dump)						**Drum**				
	96.09-	BU142, High Floor, Drop Side Dump, Reinforced Dump, Fire Engine						**Drum**				
	96.09-	BU142 (Front Disc) High Floor, Drop Side Dump, Reinforced Dump, Fire Engine		**MP-18**				**Drum**				
	96.09-	BU142, FullJust Low(Dump)	**SN650**	**MP-17**				**Drum**				
	96.09-	BU162, FullJust Low(Dump)						**Drum**				
	96.09-	BU162, Reinforced Dump3.1m						**Drum**				
	96.09-	BU172, BU182, Fire Engine						**Drum**				
	96.09-	BU202 (Front Drum)						**Drum**				
	96.09-	BU202 (Front Disc)		**MP-8**				**Drum**				
	96.09-	BU212 (Front Drum) Just Low						**Drum**				
	96.09-	BU212 (Front Disc) Just Low		**MP-8**				**Drum**				
	96.09-	BU222 (Front Drum)						**Drum**				
	96.09-	BU222 (Front Disc)		**MP-8**				**Drum**				
5300	96.09-	XZU130A						**Drum**				
RIESSE リエッセ												
4200	96.06-	HDB50, HZB50	**A1N100**	**SP444**				**Drum**				
RIESSE Ⅱ リエッセ Ⅱ												
4000	04.07-	X2B50M	**A1N100**	**SP444**				**Drum**				

Notes

Catalog for Disc Pad Figure

W = Width
H = Height
T = Thickness

※(Rough Size)

Example 1

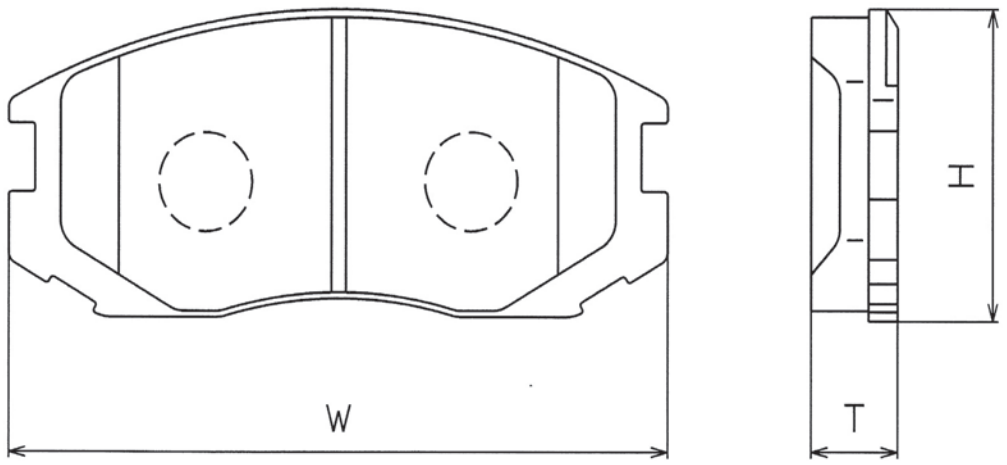

Example 2

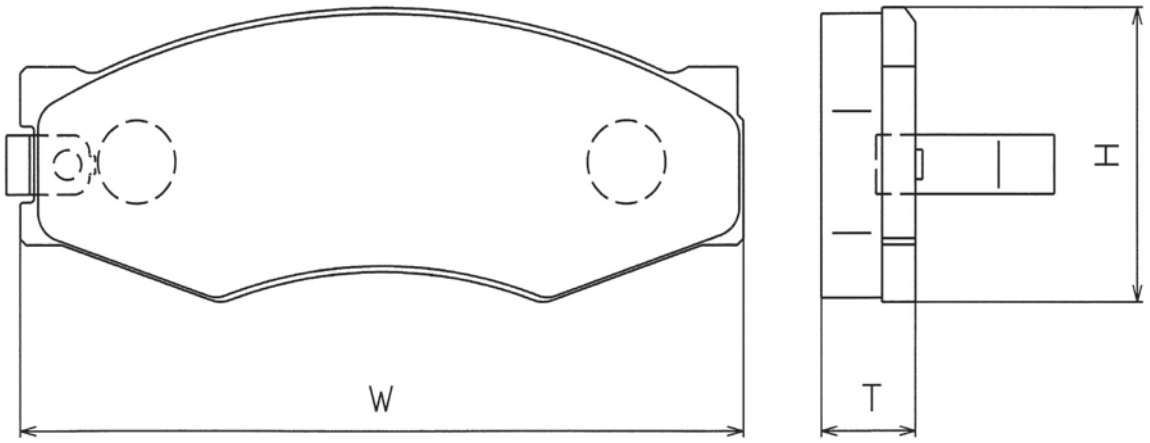

A1N005 ﾗﾝﾄﾞｸﾙｰｻﾞｰ70 LAND CRUISER70 HZJ71,71V 99.08～

Front

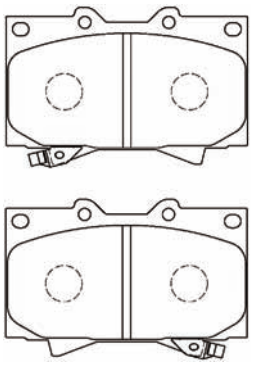

W : 119.5 H : 78.0 T : 17.5

A1N006 ﾏｰｸⅡ,ｸﾚｽﾀ MARK Ⅱ,CRESTA GX100,LX100 98.10～

ｸﾗｳﾝ CROWN GS151 98.10～

Front

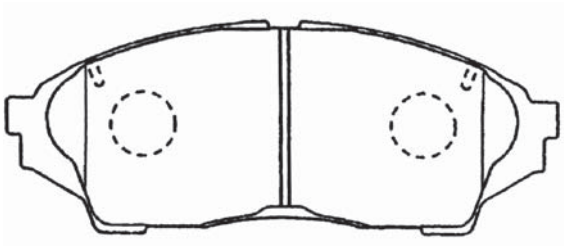

W : 137.0 H : 53.0 T : 17.5

A1N008 RAV4 ACA20W,21W 00.05～

ZCA25W,26W 00.05～

Front

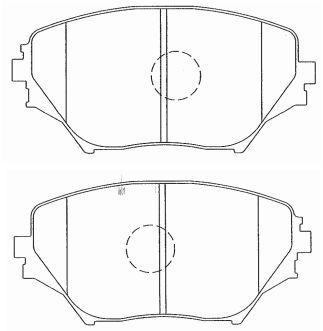

W : 123.0 H : 60.8 T : 17.5

A1N009 ｾﾙｼｵ CELSIOR UCF30,31 00.08～

Front

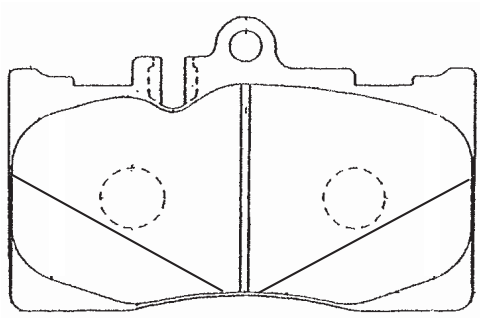

W : 118.6 H : 77.5 T : 16.0

A1N011 ﾗﾝﾄﾞｸﾙｰｻﾞｰ LAND CRUISER RZJ120W,215W 02.09～

ﾊｲﾗｯｸｽｻｰﾌ HILUX SURF RZN210W,215W 02.11～

Front

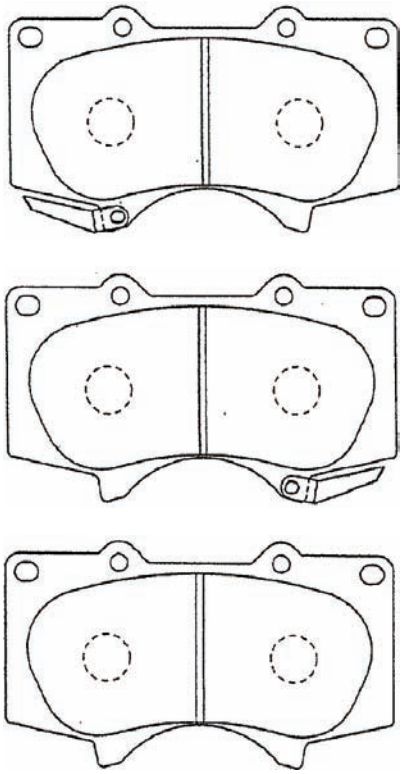

W : 134.6 H : 77.6 T : 17.0

A1N013 ﾀﾝﾄﾞﾗ TUNDRA UCK30,40,VCK30,40 00.02～

Front

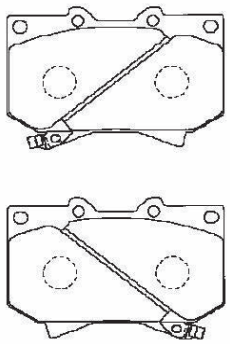

W : 119.5 H : 78.0 T : 17.0

A1N016 ﾏｰｸⅡﾊﾞﾝ MARK Ⅱ VAN YX76V,78V,LX76V 84.11～

ﾏｰｸⅡﾜｺﾞﾝ MARK Ⅱ WAGON GX70G 88.10～

Front

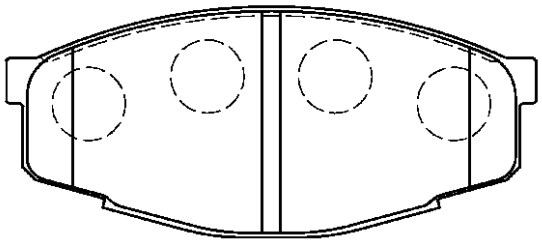

W : 116.0 H : 50.5 T : 15.5

A1N017 ﾗﾝﾄﾞｸﾙｰｻﾞｰ LAND CRUISER LJ71G,FJ62G 85.10～

Front

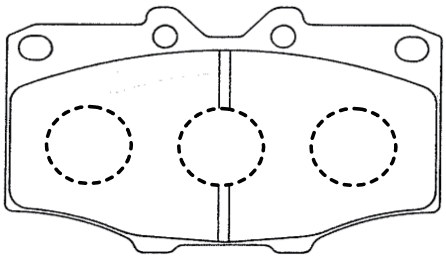

W : 107.3 H : 65.9 T : 15.0

A1N019 ｸﾗｳﾝ CROWN GS130,LS130 87.09～

Front JZS130,131,141 90.08～

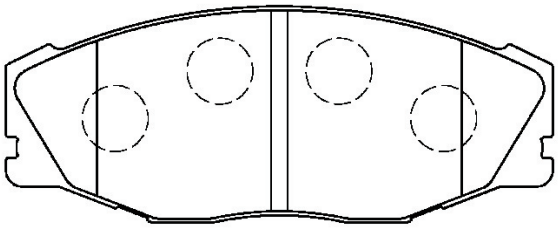

W : 133.3 H : 52.5 T : 15.0

A1N020 ﾏｰｸⅡ,ｸﾚｽﾀ MARK Ⅱ,CRESTA MX83,JZX81 89.08～

Front ｺﾝﾌｫｰﾄ COMFORT GXS10,YXS10 95.12～

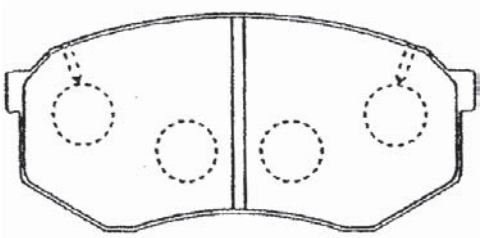

W : 116.0 H : 53.3 T : 15.5

A1N021 ﾊｲﾗｯｸｽｻｰﾌ HILUX SURF YN130G,LN130G 89.04～

Front ﾗﾝﾄﾞｸﾙｰｻﾞｰ LAND CRUISER PZJ70,HZJ73HV 90.01～

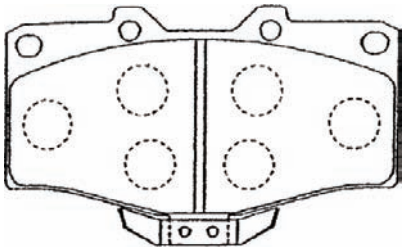

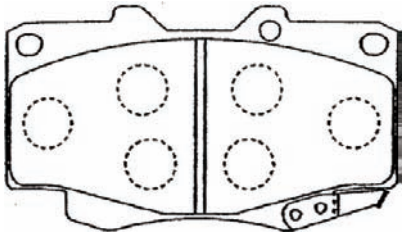

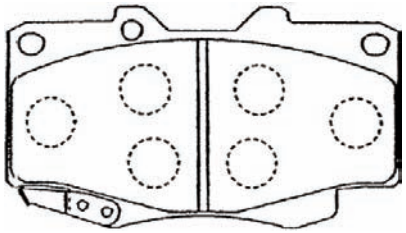

W : 119.3 H : 73.4 T : 15.0

A1N023 ﾗﾝﾄﾞｸﾙｰｻﾞｰ LAND CRUISER FJ80G,FZJ80G 90.01～

Front HDJ81V,HZJ81V 90.01～

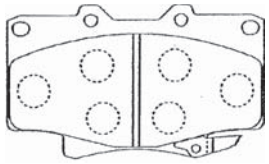

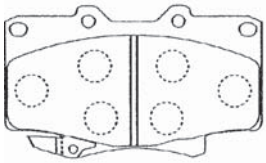

W : 119.3 H : 71.9 T : 15.0

ILLUSTRATION

A1N025 Front

セルシオ CELSIOR	UCF20,21	94.10～
センチュリー CENTURY	GZG50	97.04～

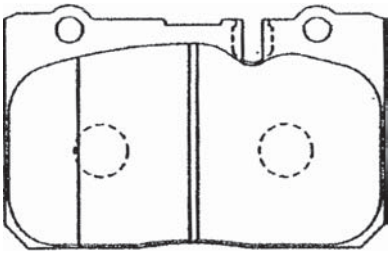

※センサー取付部　左右 各2枚

Each pad has sensor installation part

W : 115.6 H : 74.4 T : 17.0

A1N026 Front

ハイラックスサーフ HILUX SURF	LN130W,131V	91.08～
	KZN130G,130W	91.08～

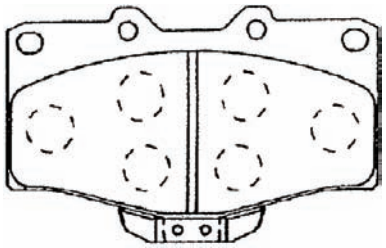

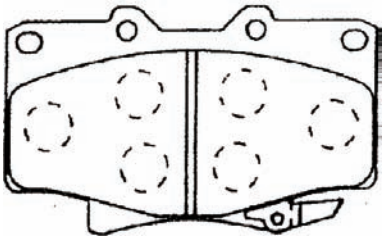

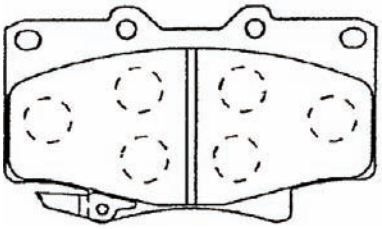

W : 119.3 H : 71.9 T : 15.0

A1N028 Front

セリカ CELICA	ST205	94.02～
スープラ SUPRA	JZA80(17inch)	94.08～

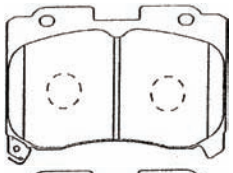

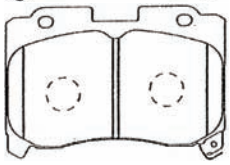

W : 119.3 H : 81.8 T : 17.0

A1N029 Front

ハイラックスサーフ HILUX SURF	KZN185,RZN185	95.11～
ランドクルーザー LAND CRUISER	KZJ90W,95W	96.04～

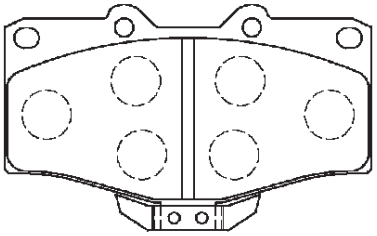

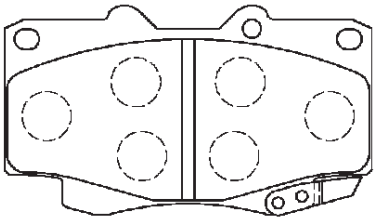

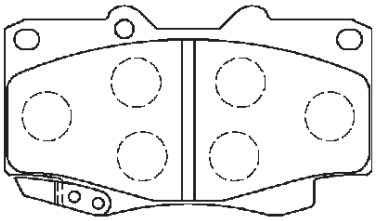

W : 119.6 H : 68.0 T : 17.0

A1N034 Front

ターセル,コルサ TERCEL,CORSA	EL41,43,45,51	90.09～
ラウム RAUM	EXZ10,15	97.05～

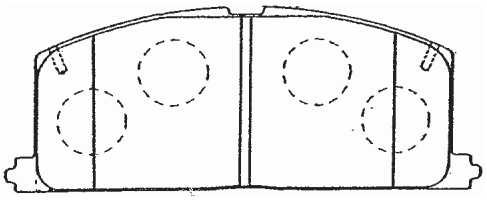

W : 119.7 H : 47.5 T : 15.0

A1N036 Front

センチュリー CENTURY	VG40,45	87.09～
ハイラックス HILUX	YN80,85,LN80,85	88.09～

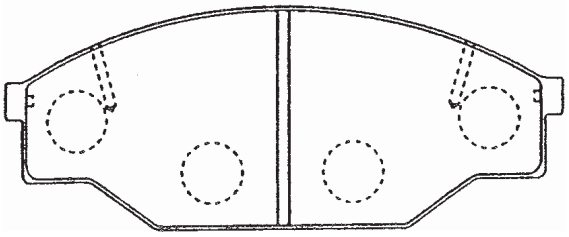

W : 140.1 H : 55.5 T : 15.0

A1N038

Front

セリカ CELICA	ST182,183,185	91.09～
カリーナED CARINA ED	ST180,181,182	91.08～

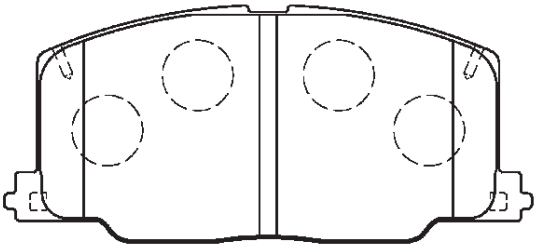

W : 119.7 H : 54.0 T : 15.0

A1N041

Front

ソアラ、アリスト SOARER,ARIST	JZZ30,31,JZS147	91.05～
マークⅡ,チェイサー MARKⅡ,CHASER	GX105,115,JZX90	92.10～

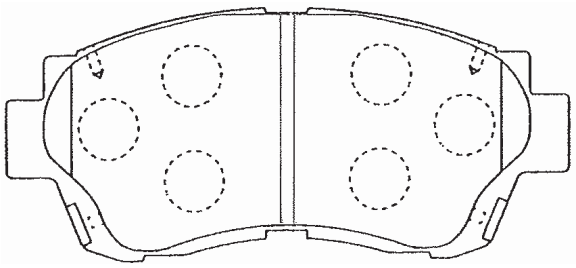

W : 141.0 H : 62.5 T : 17.0

A1N048

Front

カムリ,グラシア CAMRY,GRACIA	SXV20,SXV20W	96.12～
ビスタ,アルディオ VISTA,ARDEO	ZZV50,ZZV50G	98.06～

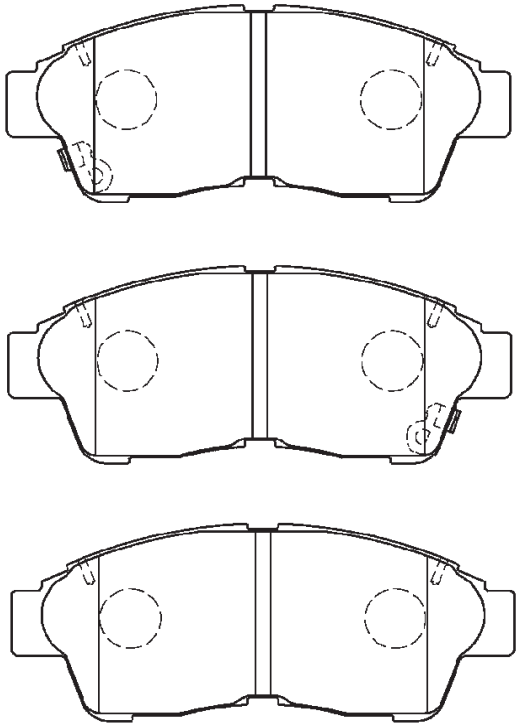

W : 133.1 H : 53.0 T : 17.5

A1N043

Front

スターレット STARLET	EP82,91,NP80,90	89.12～

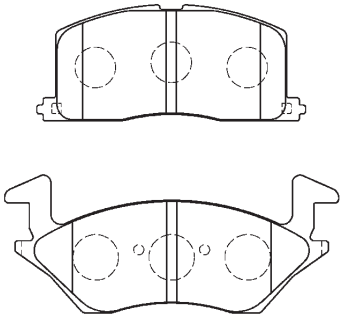

インナ Inner **W : 106.2 H : 46.0 T : 13.5**

アウタ Outer **W : 132.0 H : 54.5 T : 13.5**

A1N049

Front

ハイエースワゴン HIACE WAGON	RZH100G,110G	89.08～
ハイエースバン HIACE VAN	RZH102V,112V	89.08～

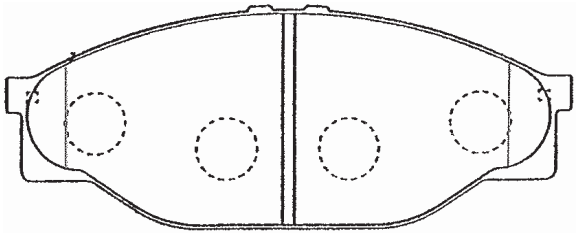

W : 140.1 H : 55.0 T : 15.5

A1N046

Front

ビスタ,カムリ VISTA,CAMRY	SV32,VZV32,33	90.07～

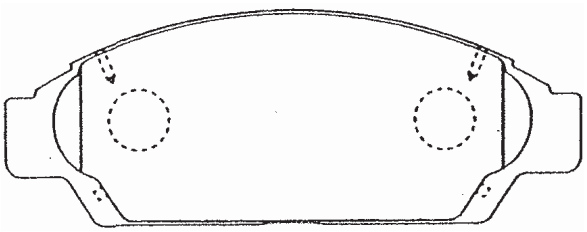

W : 144.4 H : 53.5 T : 15.5

A1N050

Front

グランビア GRANVIA	RCH11W,KCH10W	95.08～
ハイエースバン HIACE VAN	RZH102V,112V	96.08～

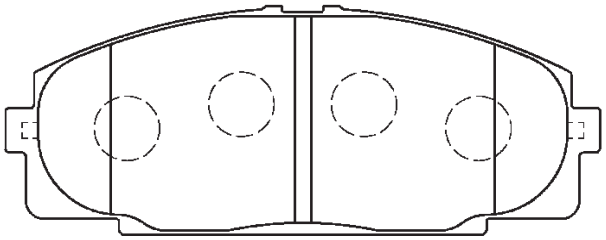

W : 145.5 H : 57.0 T : 15.5

ILLUSTRATION

A1N053 Front

カルディナ CALDINA	ST215G,215W	97.08～
セリカ CELICA	ST202,202C	97.12～

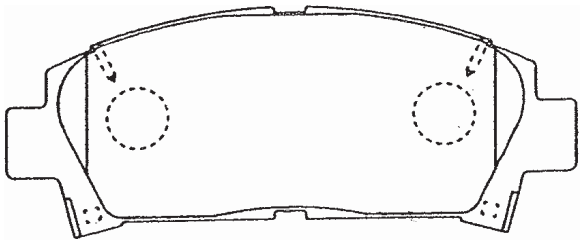

W : 141.1 H : 56.5 T : 15.5

A1N054 Front

ソアラ SOARER	JZZ30,31,32	91.05～
アリスト ARIST	JZS147	91.10～

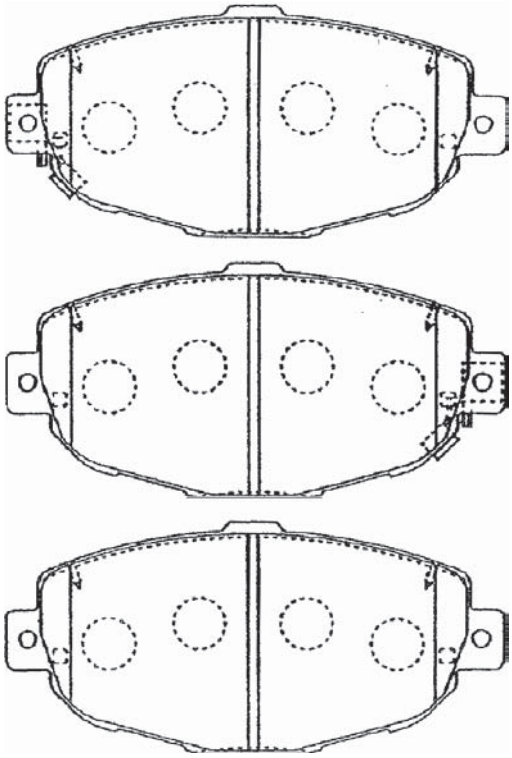

W : 144.1 H : 68.0 T : 17.1

A1N055 Front

セルシオ CELSIOR	UCF10,11	92.08～

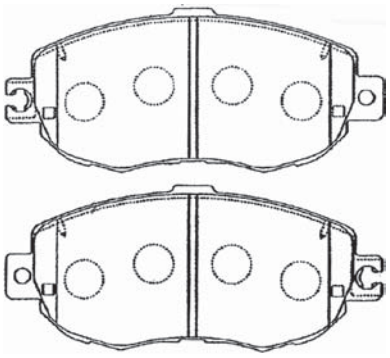

W : 144.0 H : 64.0 T : 17.0

A1N056 Front

セルシオ CELSIOR	UCF10	92.08～
アルテッツア ALTEZZA	SXE10,GXE10	98.10～

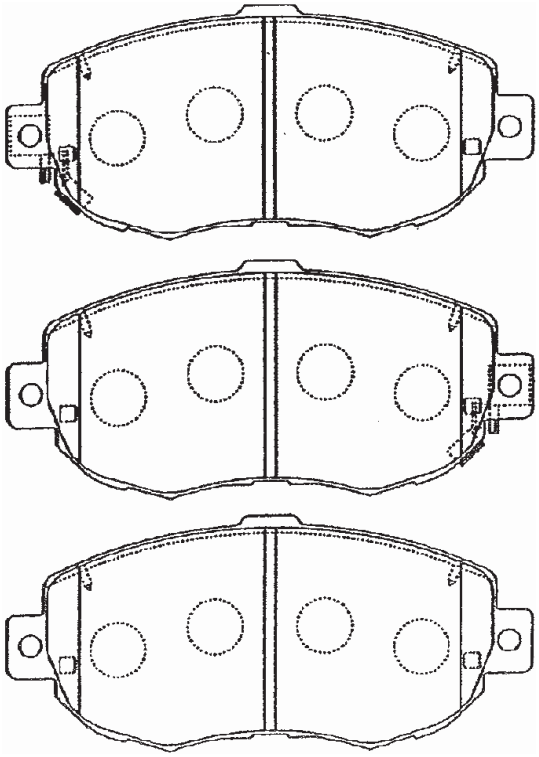

W : 144.0 H : 64.0 T : 17.0

A1N060 Front

ダイナ,トヨエース DYNA,TOYOACE	BU105,107,137	95.05～
レンジャー RANGER	BU107	96.09～

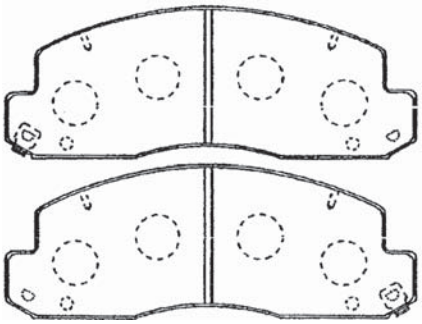

W : 166.3 H : 62.2 T : 20.0

A1N061 Front

コースター COASTER	RB20,HZB30	84.08～

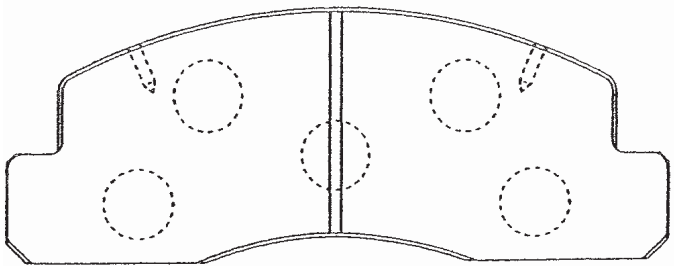

W : 166.3 H : 62.2 T : 18.0

A1N063

Front

ﾊｲｴｰｽ HIACE	YH81,LH80,YY10	88.03～
ﾀﾞｲﾅ,ﾄﾖｴｰｽ DYNA,TOYOACE	LY101,111,YY101	96.01～

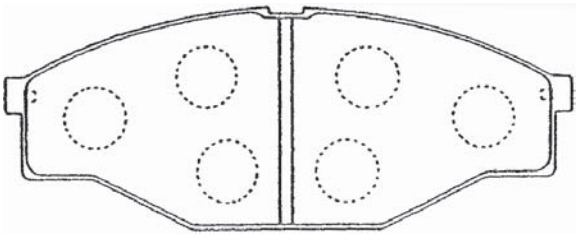

W : 140.1 H : 55.1 T : 15.5

A1N065

Front

ﾋﾞｽﾀ,ｱﾙﾃﾞｨｵ VISTA,ARDEO	SV50,55,50G,55G	98.06～
ｱﾘｵﾝ,ﾌﾟﾚﾐｵ ALLION,PREMIO	AZT240,ZTT245	01.02～

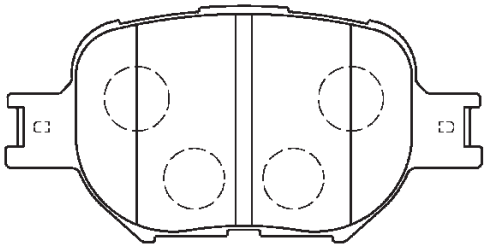

W : 117.6 H : 58.5 T : 17.5

A1N067

Front

ﾋﾞｨｯﾂ VITZ	SCP10,NCP10,15	01.03～
ｻｸｼｰﾄﾞ SUCCEED	NCP50V,NLP51V	02.06～

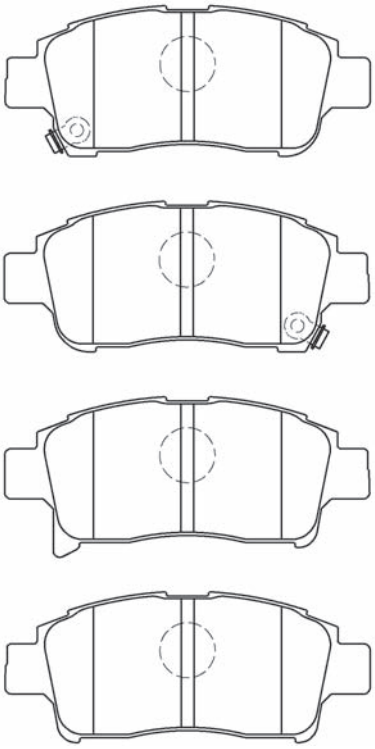

W : 112.5 H : 46.7 T : 16.5

A1N068

Front

ﾌｧﾝｶｰｺﾞ FUN CARGO	NCP20,21,25	01.04～
ﾗﾝｸｽ,ｱﾚｯｸｽ RUNX,ALLEX	NZE121,124	01.04～

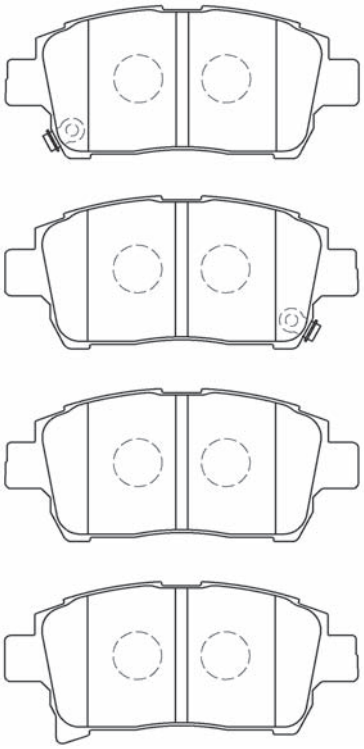

W : 116.5 H : 51.5 T : 16.5

A1N073

Front

ｳｲｯｼｭ WISH	ZNE10G,ANE10G	03.01～
ｸﾗｳﾝ CROWN	GRS180,182	03.12～

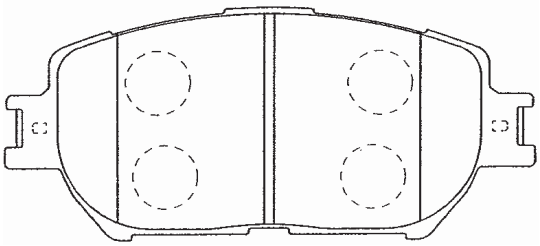

W : 131.5 H : 58.5 T : 17.5

ILLUSTRATION

A1N078

Front

タウンエースノア TOWN ACE NOAH	KM30G,YR20G	88.08～
デリボーイ DELIBOY	KXC10V,CXC10	88.08～

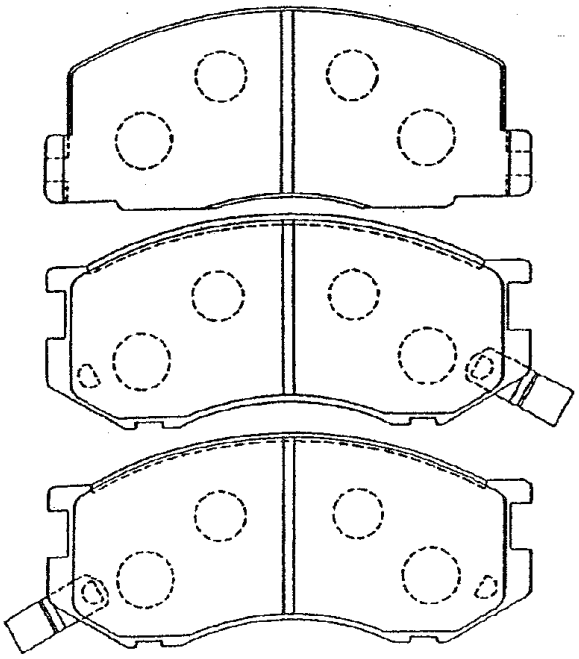

インナ Inner **W : 128.2 H : 52.0 T : 15.5**

アウタ Outer **W : 126.7 H : 55.0 T : 15.5**

A1N085

Front

エミーナ,ルシーダ EMINA,LUCIDA	CXR11G,TCR10G	90.10～
ライト,タウンエース LITE,TOWN ACE	CM85	99.06～

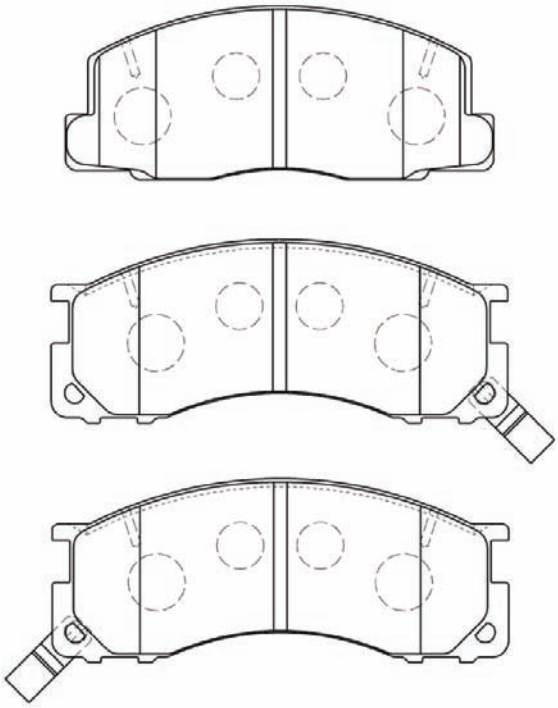

インナ Inner **W : 128.3 H : 52.0 T : 15.5**

アウタ Outer **W : 136.7 H : 55.0 T : 15.5**

A1N083

Front

タウンエース TOWN ACE	CR36V	88.08～
タウンエースノア TOWN ACE NOAH	CR30G,37G	88.08～

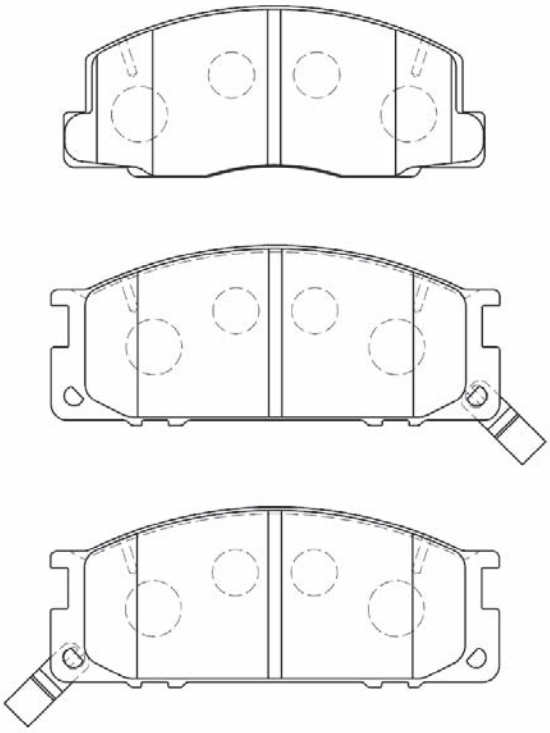

インナ Inner **W : 128.3 H : 52.0 T : 15.5**

アウタ Outer **W : 136.7 H : 55.0 T : 15.5**

A1N092

Front

エスティマ ESTIMA	TCR10W,20W	93.02～
エミーナ,ルシーダ EMINA,LUCIDA	CXR10G,20G	93.08～

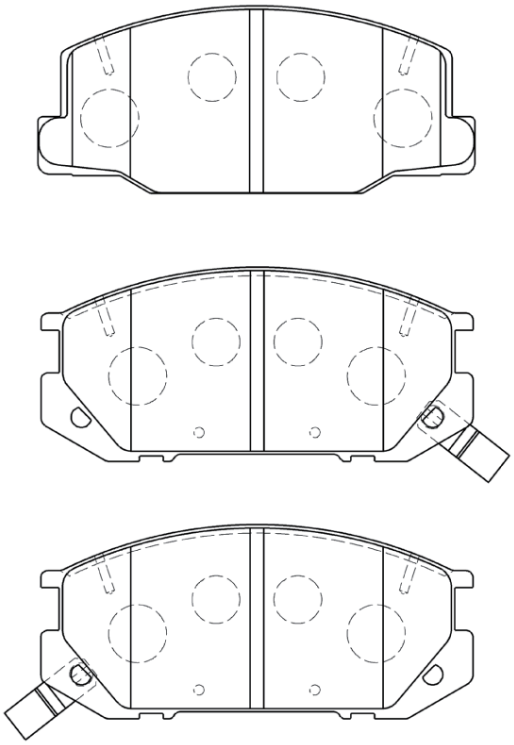

インナ Inner **W : 128.2 H : 55.0 T : 15.5**

アウタ Outer **W : 126.7 H : 57.0 T : 15.5**

A1N093

Front	エスティマ ESTIMA	TCR10W,20W	92.09～
	エミーナ,ルシーダ EMINA,LUCIDA	CXR10G,20G	93.08～

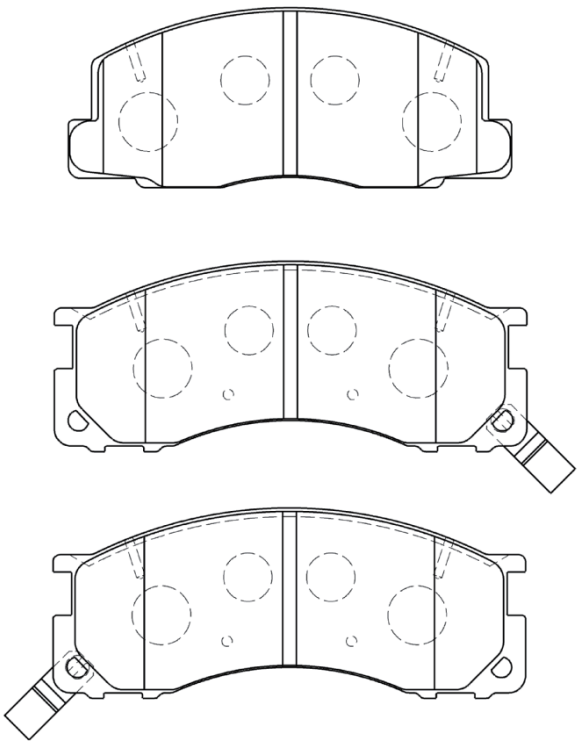

インナ Inner **W : 128.4 H : 52.0 T : 15.5**

アウタ Outer **W : 136.7 H : 55.0 T : 15.5**

A1N096

Front	エスティマ ESTIMA	TCR10W,20W	96.08～
	ライト,タウンエースノア LITE.TOWN ACE	SR40G,50G	96.10～

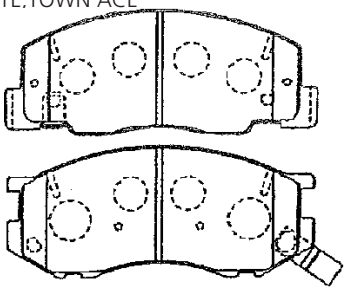

インナ Inner **W : 128.3 H : 52.0 T : 15.5**

アウタ Outer **W : 126.8 H : 54.9 T : 15.5**

A1N097

Front	カムリ,グラシア CAMRY,GRACIA	SXV25,25W	97.06～
	ナディア NADIA	SXN10,10H	98.07～

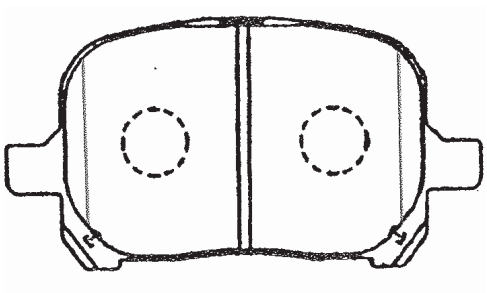

W : 116.7 H : 59.0 T : 17.0

A1N100

Front	ダイナ,トヨエース DYNA,TOYO ACE	BU105,145,107	97.08～
		XZU362,362A	99.07～

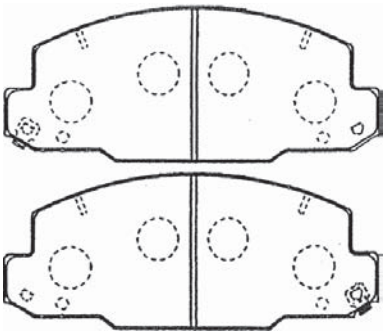

W : 166.4 H : 67.0 T : 20.0

A1N101

Front	エスティマT/L ESTIMA T/L	MCR30W,40W	99.12～
		ACR30W,40W	00.02～

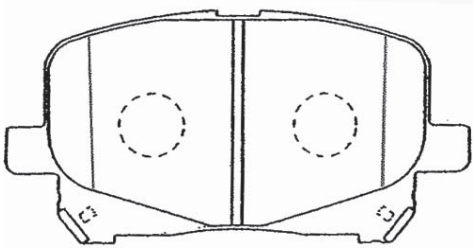

W : 116.8 H : 59.5 T : 17.0

A1N102

Front	ダイナ,トヨエース DYNA/TOYOACE	BU306,306V,346	99.05～
	デルタ DELTA	BU301J,346N	99.05～

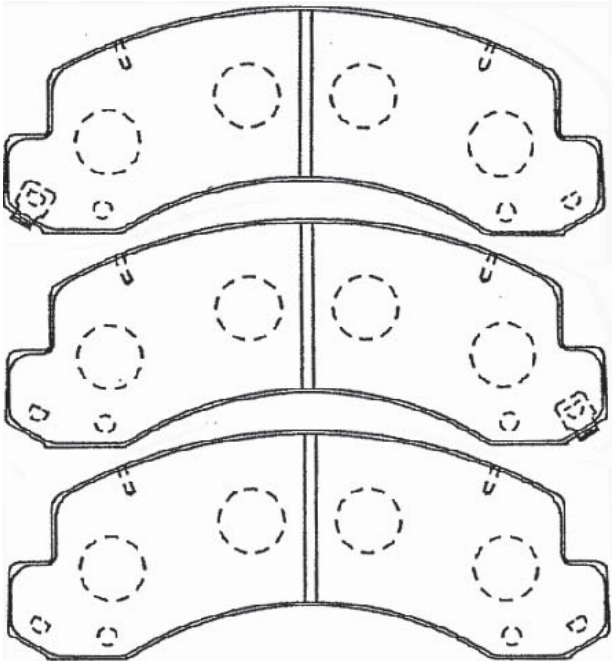

W : 166.3 H : 64.0 T : 20.0

ILLUSTRATION

A1N103 クルーガーV KLUGER V — Front

ACU20W,25W	00.11～
MCU20W,25W	00.11～

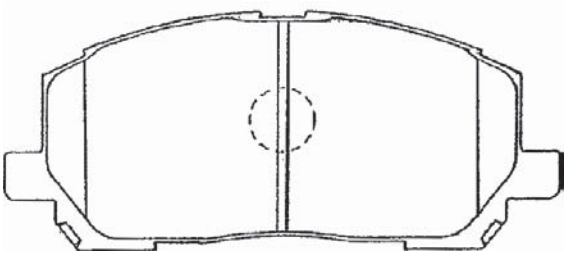

W : 138.9 H : 59.5 T : 18.7

A1N105 イプサム IPSUM / ヴォルツ VOLTZ — Front

ACM21W,26W	01.05～
ZZE136,138	02.05～

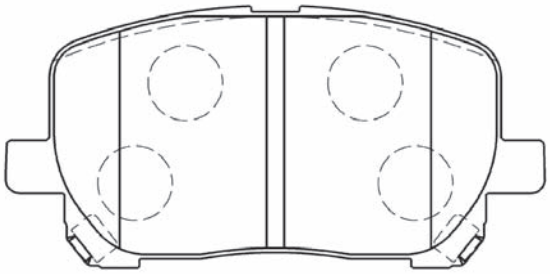

W : 123.0 H : 59.5 T : 17.0

A1N106 ウインダム WINDOM / アルファード ALPHARD — Front

MCV30	01.07～
ANH10W,15W	02.05～
MNH10W,15W	02.05～

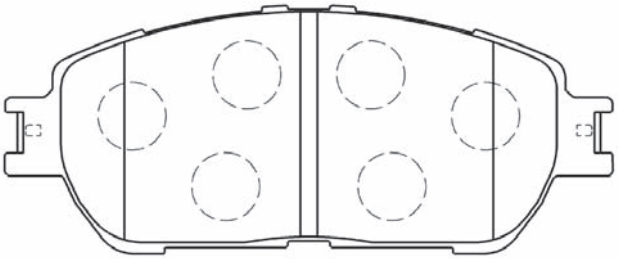

W : 143.5 H : 58.5 T : 16.0

A1N110 ハリアー HARRIER — Front

ACU30W,35W	03.02～
MCU30W,31W	03.02～

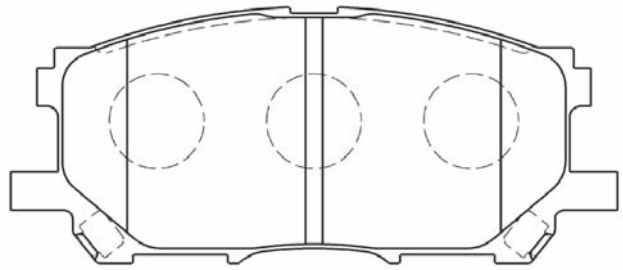

W : 140.8 H : 59.4 T : 17.0

A1N115 アバロン AVALON / シエナ SIENNA — Front

GSX30	05.01～

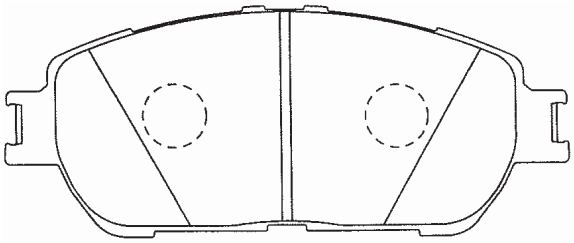

W : 143.5 H : 58.5 T : 15.5

A1N119 ハイエース HIACE / レジアスエース REGIUSACE — Front

KDH200K,200V	04.08～
TRH226K,229W	04.08～

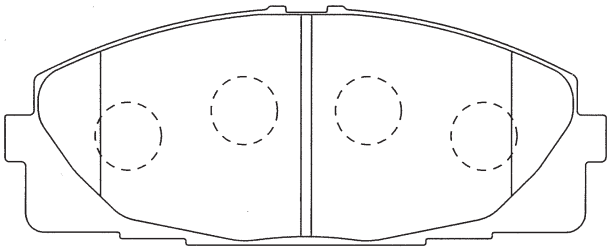

W : 145.5 H : 56.0 T : 15.5

A1N128 オーリス,アクシオ AURIS,AXIO / フィルダー FIELDER — Front

NZE141,144	06.10～
NZE141G,144G	06.10～

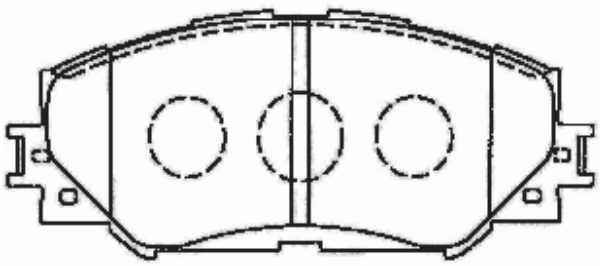

W : 139.1 H : 55.7 T : 17.5

A1N129 RAV4 / カムリ CAMRY — Front

ACA31W,36W	05.11～
ACV40	06.01～

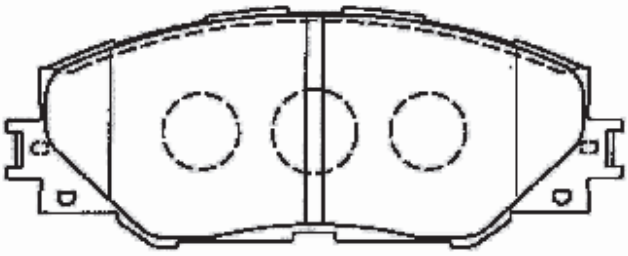

W : 146.6 H : 57.0 T : 17.5

A1N139 エスティマ ESTIMA ACR5#,GSR5# 06.01～
アルファード ALPHARD ANH2#,GGH2# 08.05～
Front

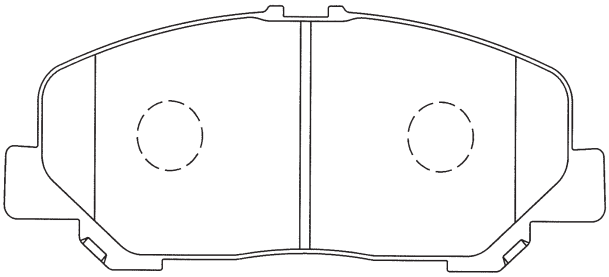

W : 147.7 H : 60.9 T : 18.0

A1N155 ヴィッツ VITZ KSP90 05.01～
NCP91,95
Front

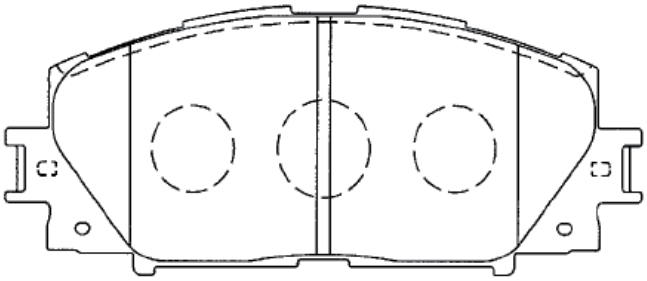

W : 123.8 H : 49.6 T : 17.5

A1N140 クラウン CROWN GRS180,182,183 03.12～
Front

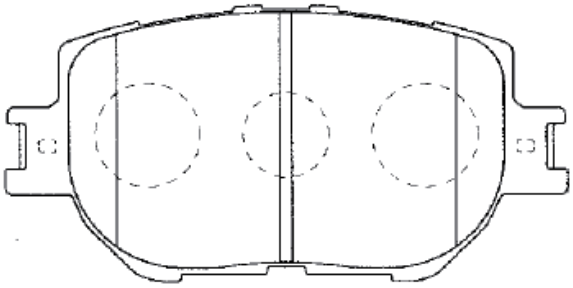

W : 117.6 H : 58.5 T : 17.5

A1N144 ランドクルーザー100 LAND CRUISER100 HDJ101,UZJ100 98.01～
Front

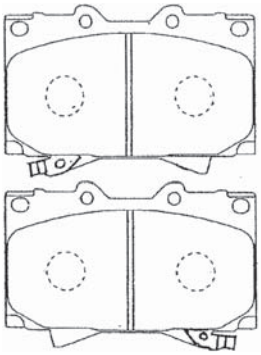

W : 119.5 H : 78.0 T : 17.5

A1N156 ランドクルーザー200 LAND CRUISER200 UZJ200W,URJ202W 07.08～
Front

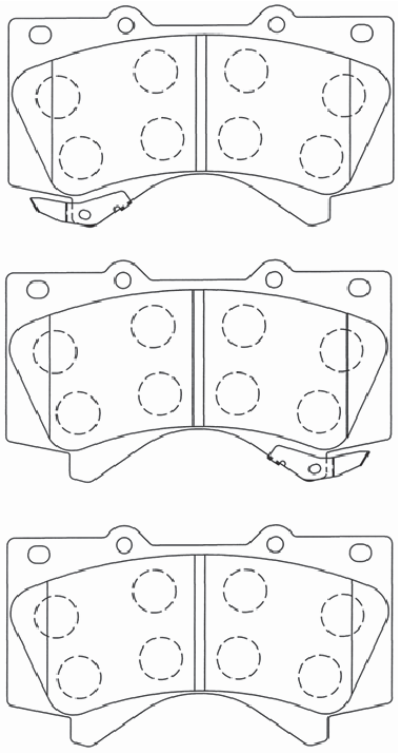

W : 143.7 H : 83.2 T : 17.9

A1N154 カムリ CAMRY ACV40,50 06.01 ～
Front

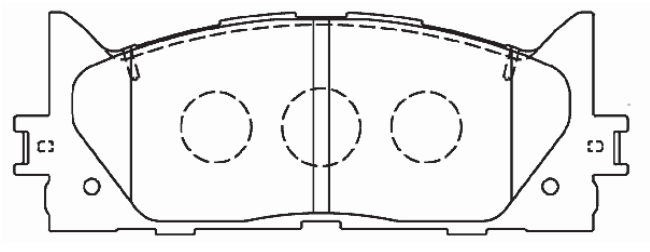

W : 157.6 H : 55.5 T : 17.5

A1N166 クラウン CROWN GRS184 '05.09～
レクサス LEXUS IS350 '05.08～
Front

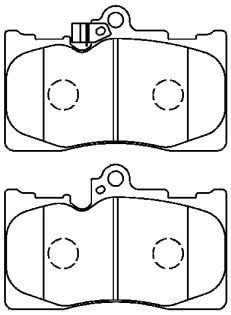

W : 118.3 H : 77.5 T : 17.5

ILLUSTRATION

A1N190 アベンシス AVENSIS AZT250,255 03.10～

Front

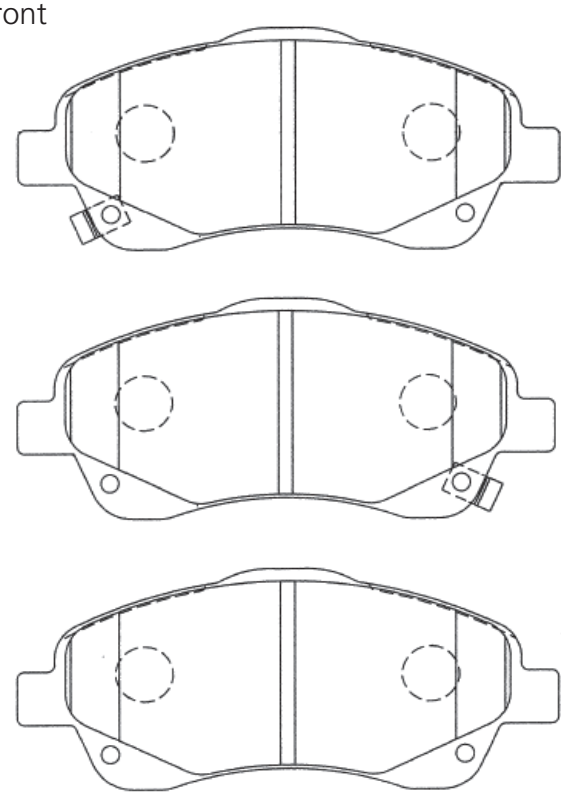

W : 151.0 H : 64.0 T : 18.0

A1N191 RX270 GGL10W,15W 09.01～

Front

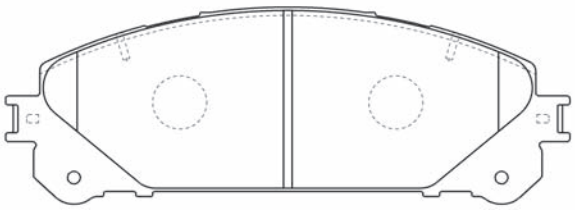

W : 163.2 H : 59.5 T : 17.5

A1N192 プリウス PRIUS ZVM30 09.05～

Front

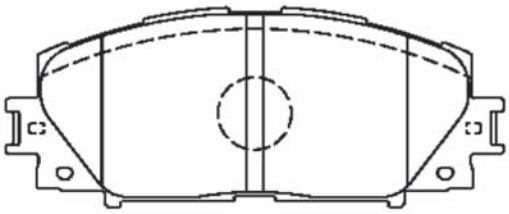

W : 122.8 H : 49.8 T : 15.5

A1N197 パッソ PASSO KGC35 (Hana) 10.02～

Front スイフト SWIFT ZC32S 10.09～

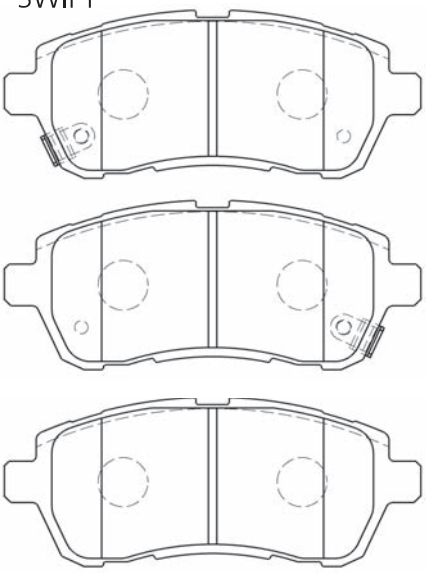

W : 125.7 H : 51.8 T : 15.5

A1N199 カローラ COROLLA ZZE120 02.09～

Front

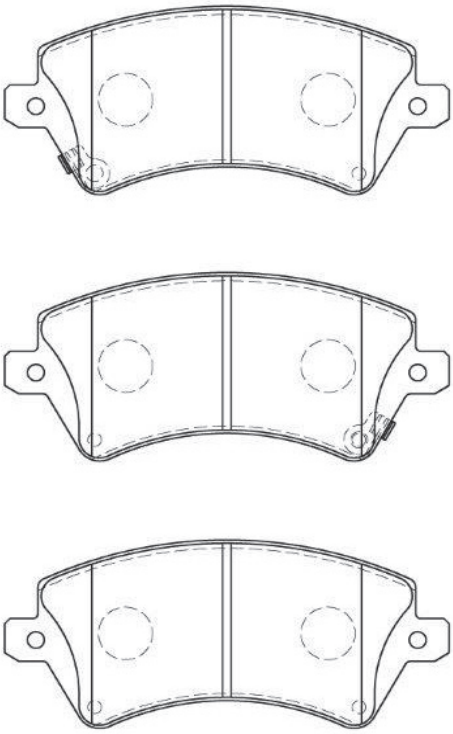

W : 131.6 H : 57.5 T : 17

A1N249

Front

ｸｨｯｸﾃﾞﾘﾊﾞﾘｰ QUICKDELIVERY	LY151,152	95.05～
ﾀﾞｲﾅ/ﾄﾖｴｰｽ DYNA/TOYOACE	YY131,161,162	96.01～

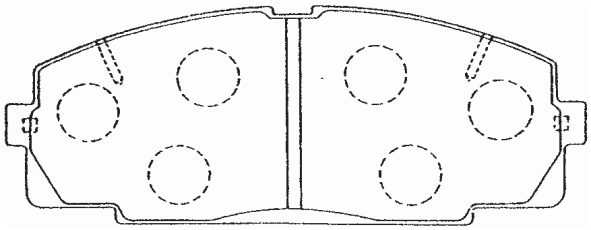

W : 145.5 H : 57.5 T : 15.5

A2N010

Rear

ｾﾙｼｵ CELSIOR	UCF30,31	00.08～

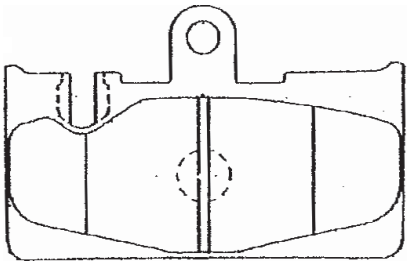

W : 96.2 H : 62.0 T : 15.0

A2N004

Rear

ﾗﾝﾄﾞｸﾙｰｻﾞｰ LAND CRUISER	HDJ101,UZJ100	98.01～

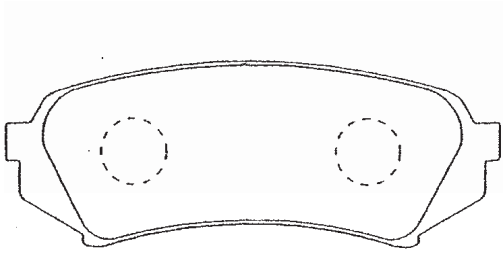

W : 123.0 H : 45.1 T : 17.5

A2N012

Rear

ﾗﾝﾄﾞｸﾙｰｻﾞｰ LAND CRUISER	RZJ120W,215W	02.09～
ﾊｲﾗｯｸｽｻｰﾌ HILUX SURF	RZN210W,215W	02.11～

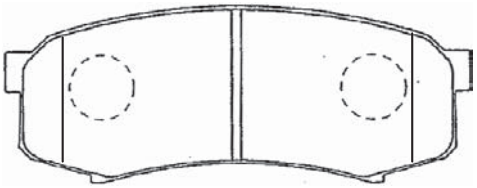

W : 116.0 H : 43.6 T : 15.5

A2N007

Rear

ｳﾞｨｯﾂ VITZ	NCP13	00.10～
ﾗﾝｸｽ,ｱﾚｯｸｽ RUNX,ALLEX	ZZE123	01.01～

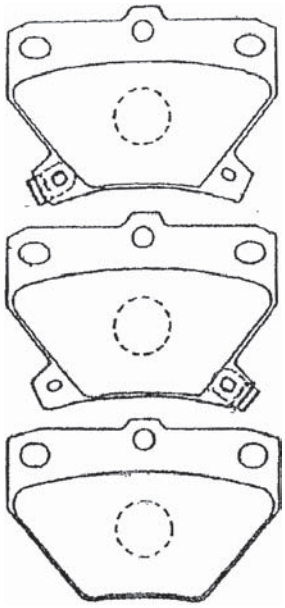

W : 78.5 H : 55.1 T : 14.0

A2N027

Rear

ｾﾘｶ CELICA	ST205	94.02～
ｽｰﾌﾟﾗ SUPRA	JZA80	94.08～

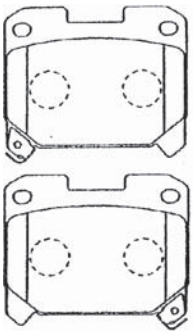

W : 80.9 H : 69.0 T : 16.0

A2N030

Rear

ﾏｰｸⅡ,ｸﾚｽﾀ MARKⅡ,CRESTA	GX100,LX100	96.09～
ﾁｪｲｻｰ CHASER	SX100,JZX100	96.09～

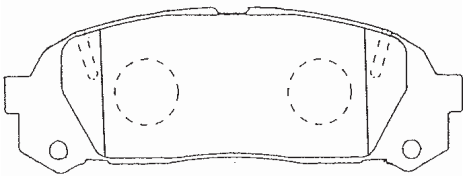

W : 116.0 H : 40.0 T : 17.5

ILLUSTRATION

A2N031 RAV4 SXA10W,11W 97.09

Rear

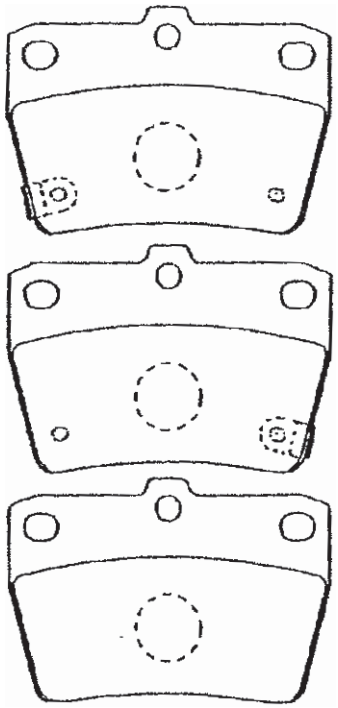

W : 78.5 H : 54.2 T : 14.0

A2N044 MR2 SW20 89.12～

Rear MR-S ZZW30 99.10～

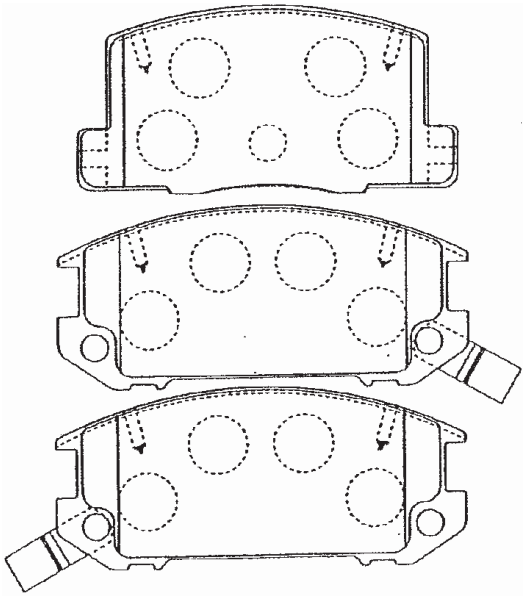

インナ Inner **W : 98.6 H : 47.3 T : 16.0**

アウタ Outer **W : 106.9 H : 47.0 T : 15.5**

A2N040 スターレット STARLET EP82,91 89.12～

Rear サイノス CYNOS EL44(β) 91.01～

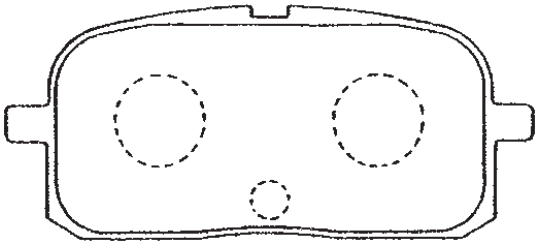

W : 87.0 H : 38.0 T : 12.5

A2N047 エスティマ ESTIMA TCR11W,21W 90.02～

Rear エミーナ,ルシーダ EMINA,LUCIDA CXR10G,TCR10G 93.08～

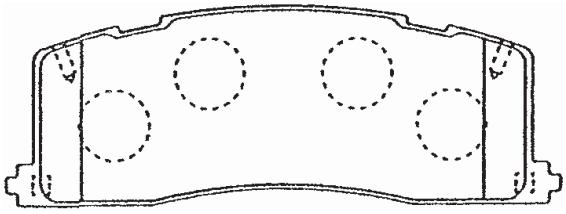

W : 119.7 H : 42.5 T : 15.5

A2N042 セルシオ CELSIOR UCF10,11 89.11～

Rear

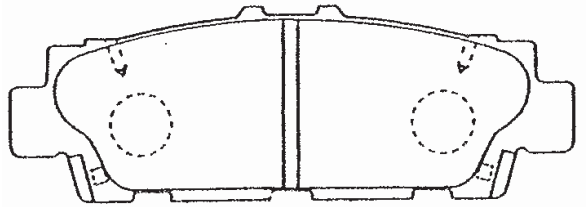

W : 117.0 H : 40.0 T : 15.5

A2N057

Rear

マークⅡ,チェイサー MARKⅡ,CHASER	SX90,GX90,LX90	92.10～
クラウン CROWN	GS151,LS151	95.12～

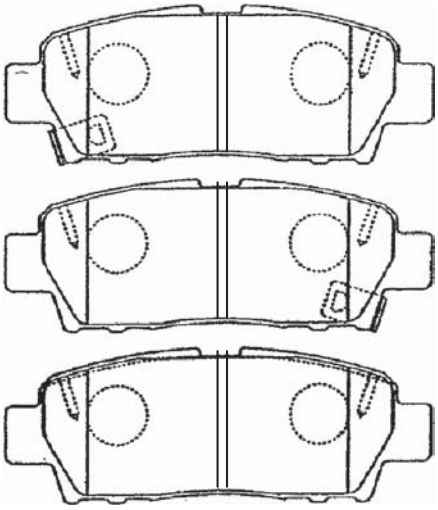

W : 106.1 H : 38.3 T : 17.5

A2N059

Rear

スープラ SUPRA	JZA80	93.05～
マークⅡ、クレスタ MARKⅡ,CRESTA	JZX90,93,100	95.09～

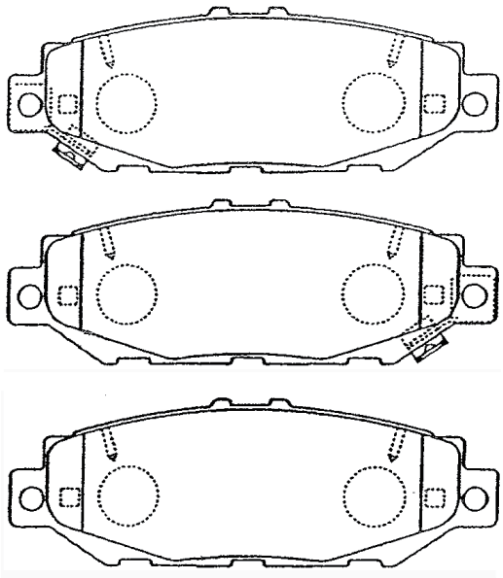

W : 122.0 H : 41.0 T : 15.5

A2N058

Rear

セルシオ CELSIOR	UCF10,11,20,21	92.08～
センチュリー CENTURY	GZG50	97.04～

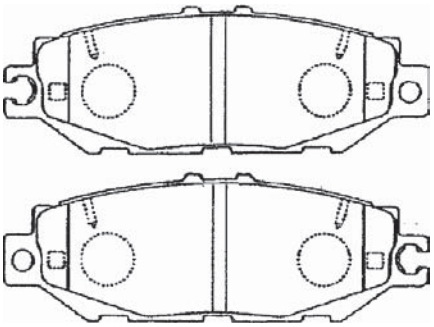

W : 122.0 H : 41.0 T : 15.5

A2N066

Rear

ウインダム WINDOM	MCV20,21	99.08～
カムリ,グラシア CAMRY,GRACIA	SXV20,20W	99.08～

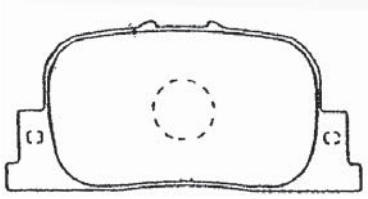

W : 83.1 H : 38.5 T : 15.0

ILLUSTRATION

A2N069 Rear

エスティマT/L ESTIMA T/L	RCR30W	99.12～
イプサム IPSUM	ACM21W,26W	01.05～

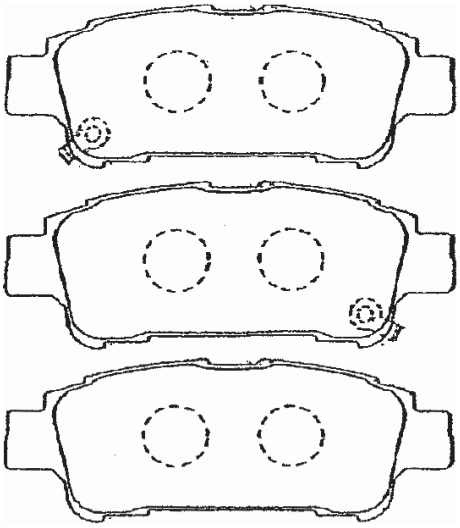

W : 112.5 H : 42.9 T : 16.5

A2N081 Rear

カリーナ CARINA	AT171,175	88.05～
セリカ CELICA	ST182,183,185	89.09～

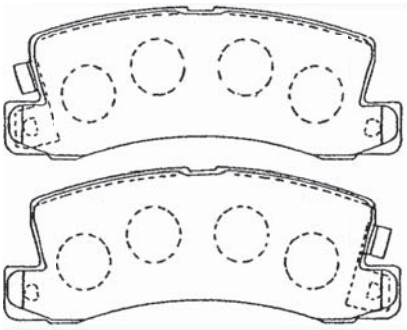

W : 107.6 H : 42.5 T : 15.0

A2N084 Rear

アリスト ARIST	JZS147	91.10～
クラウン CROWN	JZS147,149	91.10～

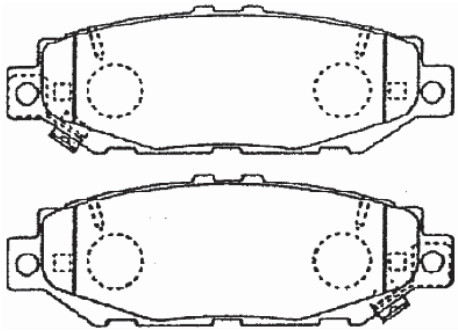

W : 122.0 H : 41.0 T : 15.5

A2N076 Rear

カローラレビン COROLLA LEVIN	AE86	83.05～
スプリンタートレノ SPRINTER	AE86	83.05～

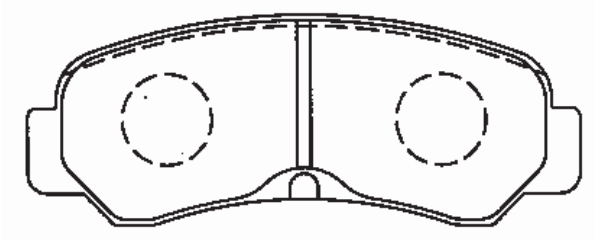

W : 98.8 H : 37.0 T : 14.5

A2N080 Rear

クラウン CROWN	GS130,JZS131	87.09～
スープラ SUPRA	GA70,JZA70	88.08～

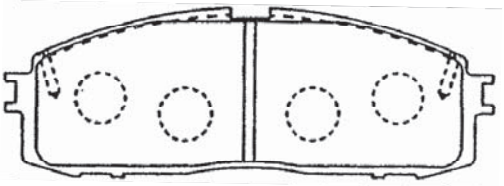

W : 125.3 H : 42.3 T : 14.5

A2N094 Rear

コロナEXiV CORONA EXiV	ST202,203,205	95.08～
セリカ CELICA	ST202,202C,203	95.08～

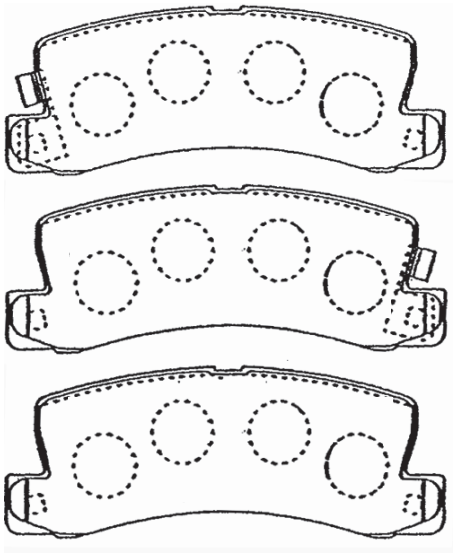

W : 107.6 H : 42.5 T : 15.0

A2N095

Rear

レビン,セレス LEVIN,CERES	AE101,111	95.05～
スプリンター,カリブ SPRINTER,CARIB	AE111G	96.05～

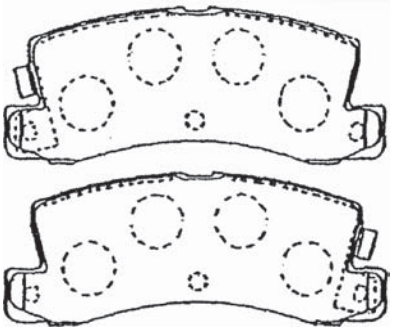

W : 107.6 H : 42.5 T : 15.0

A2N099

Rear

アルテッツア ALTEZZA	SXE10,GXE10	98.10～
マークⅡ MARKⅡ	GX110,115	00.10～

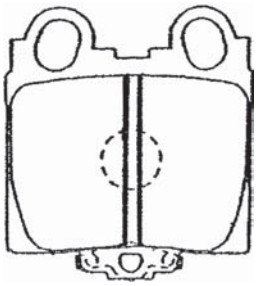

W : 57.2 H : 63.6 T : 15.5

A2N104

Rear

クルーガーV KLUGER V	ACU20W	00.11～
ウィッシュ WISH	ZNE10G,ANE10G	03.01～

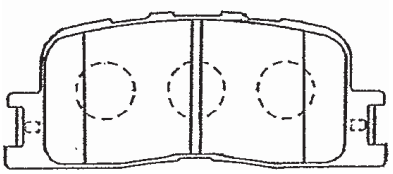

W : 93.0 H : 37.9 T : 16.0

A2N111

Rear

ハリアー HARRIER	ACU30W,35W	03.02～
	MCU30W,31W	03.02～

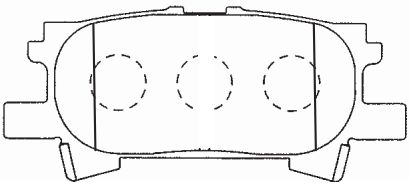

W : 101.8 H : 43.9 T : 15.5

A2N118

Rear

クラウン CROWN	GRS180,182,183	03.12～

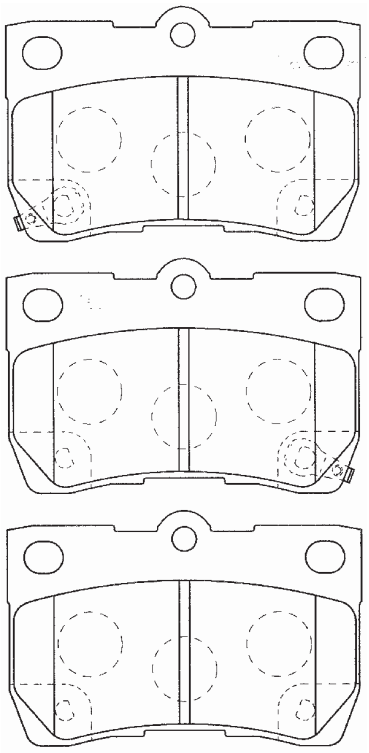

W : 88.0 H : 58.1 T : 15.5

A2N130

Rear

RAV4	ACA31W、36W	05.11～
カムリ CAMRY	ACV40	06.01～

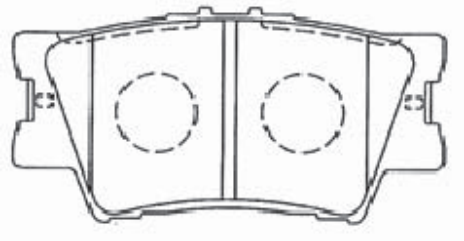

W : 96.7 H : 49.2 T : 15.5

A2N159

Rear

ランドクルーザー LAND CRUISER	UZJ200W	07.08～
	URJ202W	09.05～

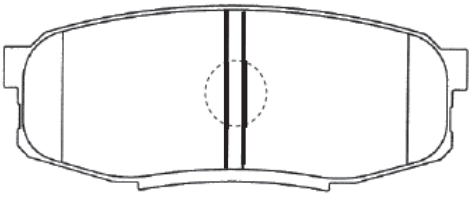

W : 116.2 H : 45.7 T : 17.5

ILLUSTRATION

A2N191

Rear

エスティマ ESTIMA	ACR5#,GSR5#	06.01～
アルファード ALPHARD	ANH2#,GGH2#	08.04～
ヴェルファイア VELLFIRE	ANH2#,GGH2#	08.04～

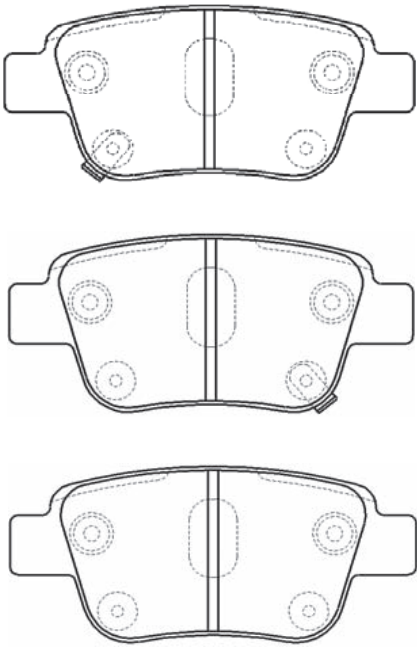

W : 101.8 H : 46.0 T : 15.0

A2N196

Rear

オーリス AURIS	NZE181H	12.08～
プリウス PRIUS	ZVW30,35	09.05～

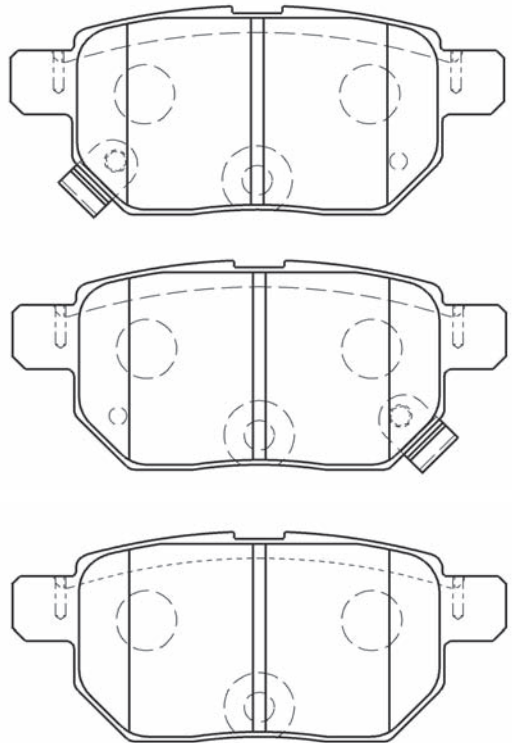

W : 98.5 H : 42.5 T : 14.5

A2N194

Rear

プリウス PRIUS	ZVW40W,41W	11.04～
RX270	GGL10W,15W	09.01～

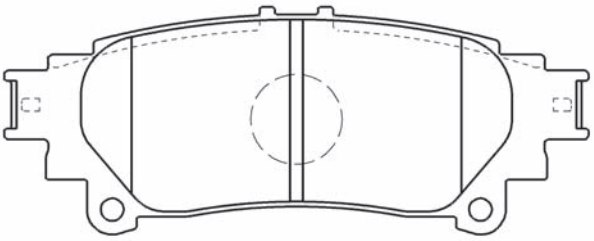

W : 115.2 H : 47.0 T : 15.0

A2N226

Rear

クラウン CROWN	GRS210,211(2.5L),AWS210(HV)	14.07～
マジェスタ MAJESTA	GRS214(3.5L),GWS214(3.5L HV)	13.09～

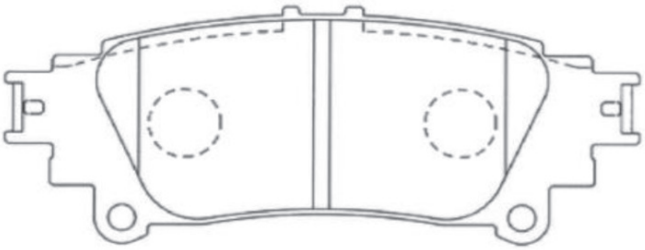

W : 115.2 H : 45.6 T : 16.5

A2N228 ﾉｱ,ｳﾞｫｸｼｰ NOAH/VOXY ZRR80,85 14.01～

Rear

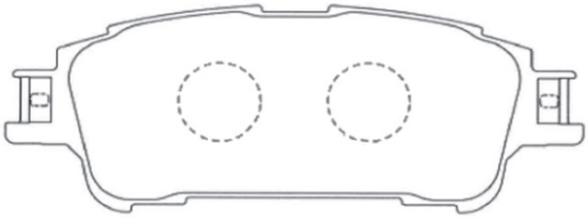

W : 112.6 H 42.9 T : 16.0

A2N232 ｵｰﾘｽ AURIS NZE15#,RZE15# 06.10～

ﾌﾞﾚｲﾄﾞ BLADE AZE15#,GRE156 06.12～

ｶﾛｰﾗ ﾙﾐｵﾝ CAROLLA RUMION NZE151,ZRE15# 07.10～

Rear

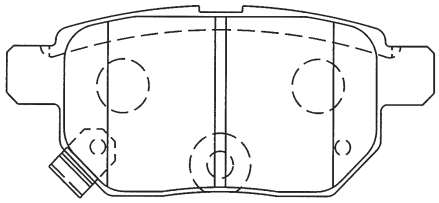

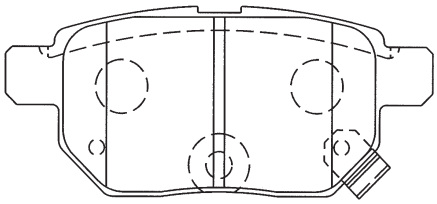

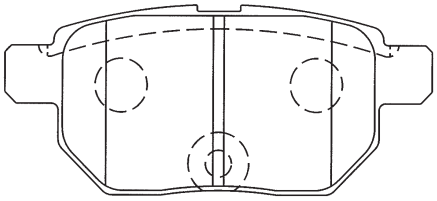

W : 98.5 H : 42.5 T : 14.5

ILLUSTRATION

B1N002 シルビア SILVIA S15 99.01～

Front

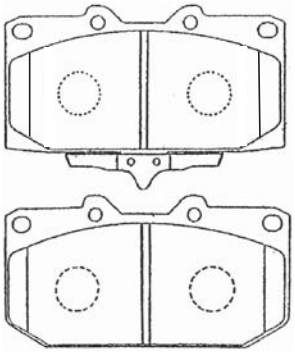

W : 119.3 H : 61.9 T : 14.5

B1N006 スカイライン SKYLINE HCR32,HNR32 89.05～

Front シルビア SILVIA S14,CS14(ターボ) 89.10～

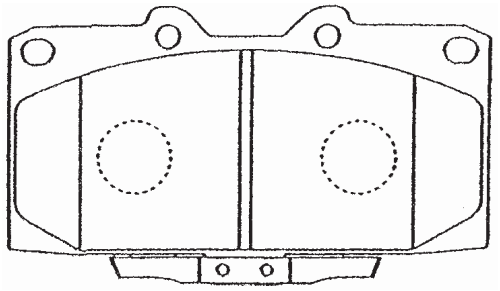

W : 119.3 H : 61.9 T : 14.5

B1N003 アトラス ATLAS BF22,BGF22,UF22 86.11～

Front キャラバンホーミー CARAVAN HOMY CHGE24,VHE24 88.10～

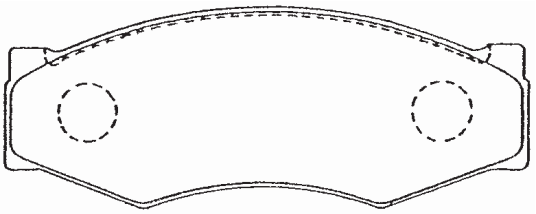

W : 130.0 H : 48.5 T : 17.0

B1N004 セドリック,グロリア CEDRIC,GLORIA TY31,MJY31 87.06～

Front バネット VANETTE KHGNC22 87.06～

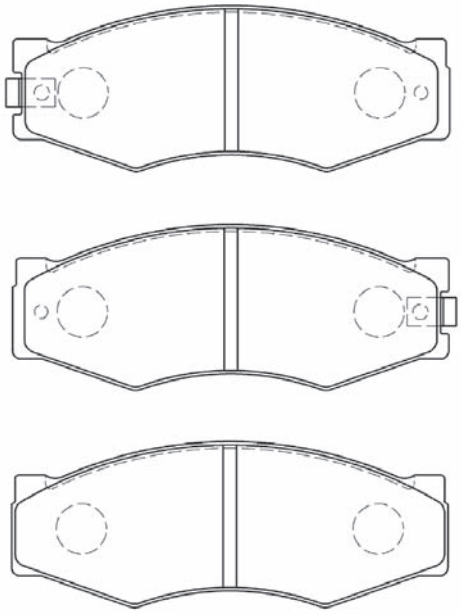

W : 130.0 H : 48.5 T : 17.0

B1N009 サニー SUNNY B12,FB12 85.09～

Front パルサー PULSAR N13,FN13 86.05～

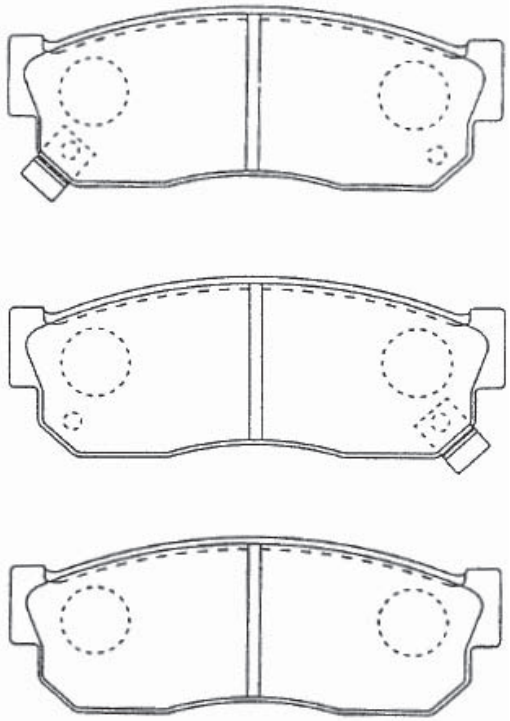

W : 108.6 H : 40.0 T : 16.0

B1N010 エルフ ELF ASN6F23 95.06～

Front ファーゴ FAGO JKRGE24,JVRE24 95.08～

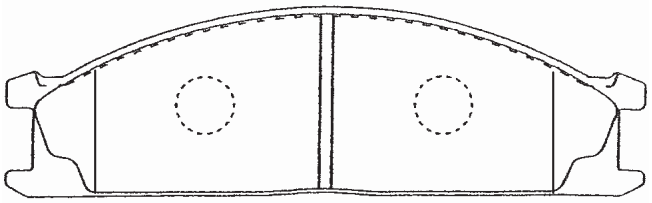

W : 160.6 H : 49.5 T : 17.0

B1N011

Front	キャラバンホーミー CARAVAN HOMY	KSGE24,AEGE24	88.10～
	ミストラル MISTRAL	R20,KR20	94.02～

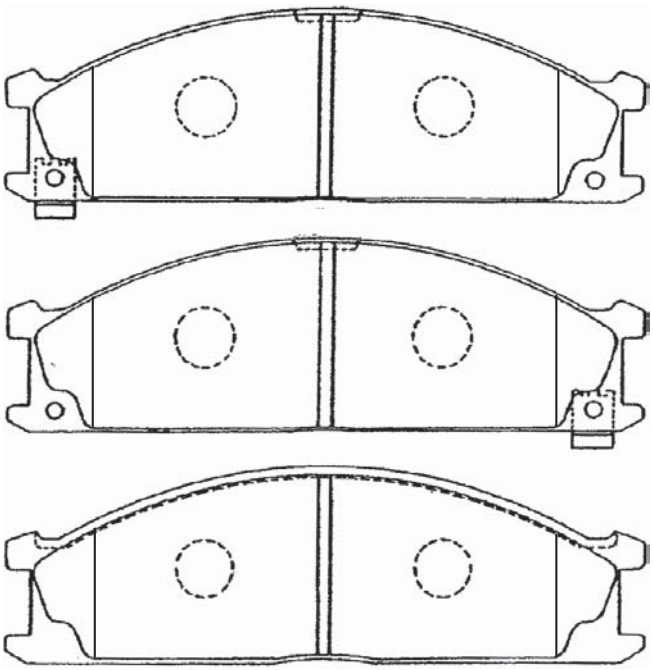

W : 160.6 H : 49.5 T : 17.0

B1N018

Front	サニー SUNNY	HB13,HNB13	90.01～
	パルサー PULSAR	HN14	90.08～

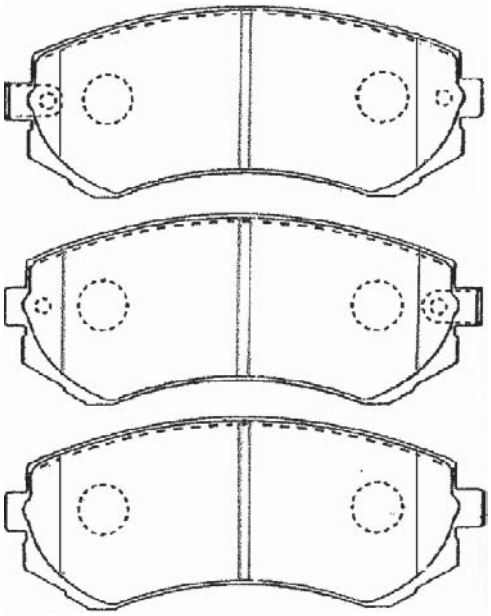

W : 121.0 H : 50.3 T : 16.0

B1N017

Front	プレセア PRESEA	R10,PR10	90.06～
	パルサー PULSAR	N14,FN14,SN14	90.08～

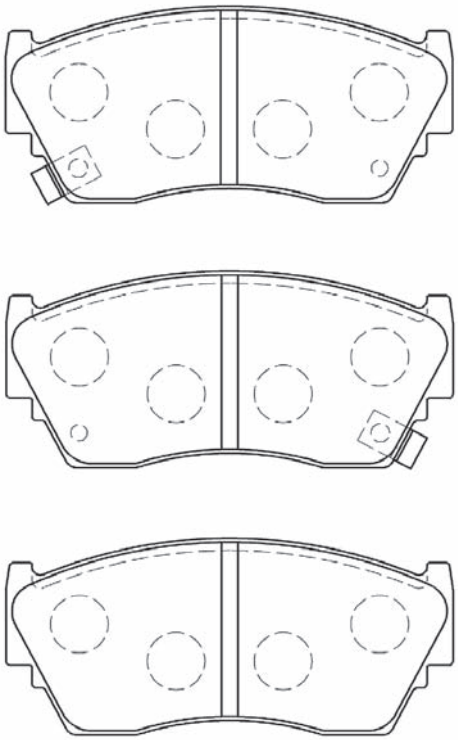

W : 108.6 H : 48.0 T : 16.5

B1N019

Front	ステージア STAGEA	HWC34,WGC34	96.09～
	ウイングロード WINGROAD	WPY11	99.05～

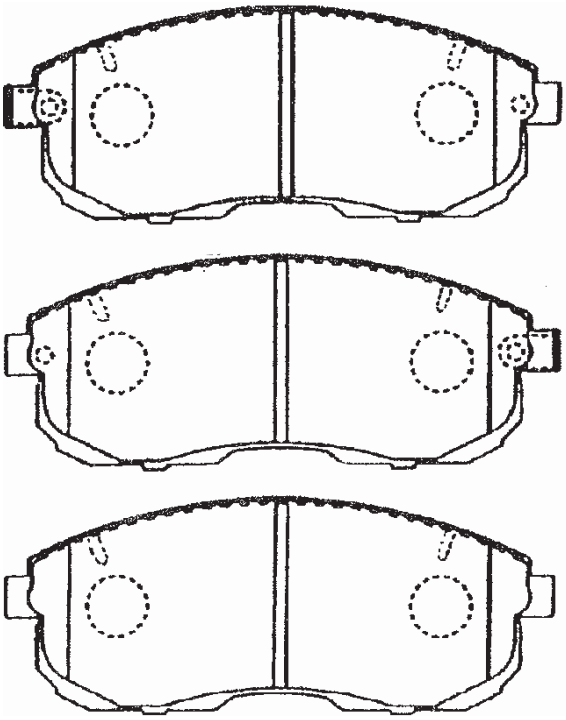

W : 137.0 H : 53.0 T : 17.0

ILLUSTRATION

B1N020

Front	ﾌﾟﾘﾒｰﾗ PRIMERA	HP10,11,FHP10,11	90.10～
	ｼﾙﾋﾞｱ SILVIA	S14,CS14	96.06～

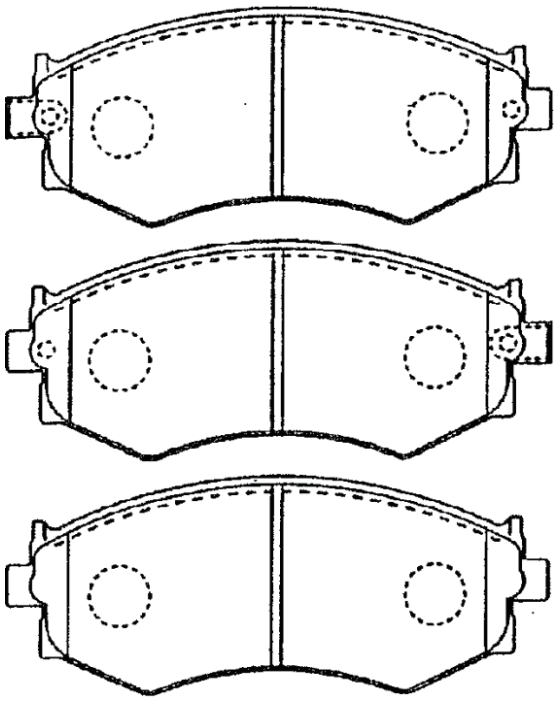

W : 137.0 H : 54.0 T : 17.0

B1N023

Front	ﾛｰﾚﾙ LAUREL	GC34,35,GNC34	94.01～
	ｽﾃｰｼﾞｱ STAGEA	WGNC34	96.09～

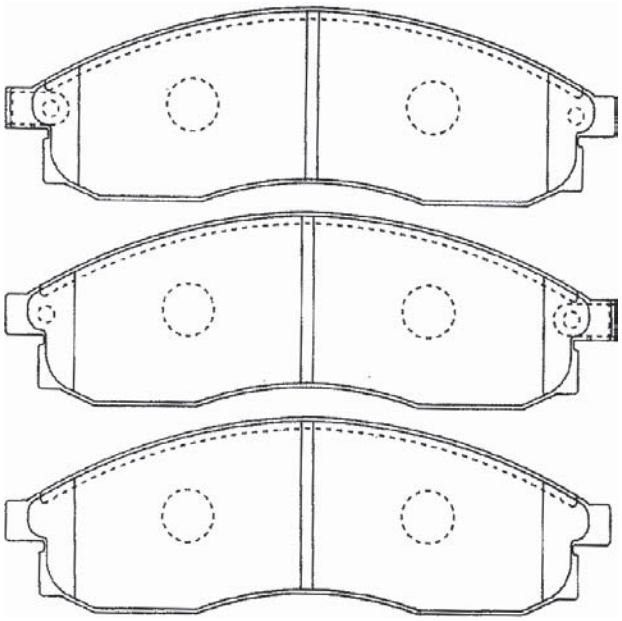

W : 151.0 H : 48.5 T : 17.0

B1N021

Front	ﾌﾞﾙｰﾊﾞｰﾄﾞ BLUEBIRD	HNU12(ﾀｰﾎﾞ)	89.10～
	ﾌﾟﾚｰﾘｰﾘﾊﾞﾃｨ PRAIRE LIBERTY	HM11,PM11	90.09～

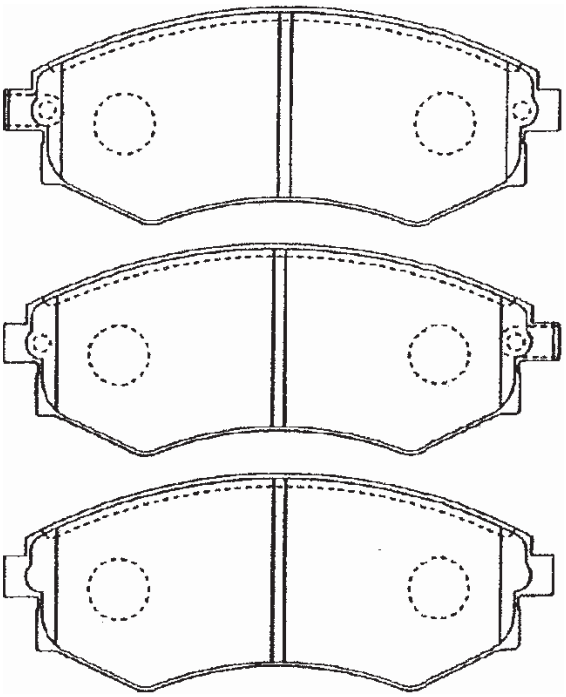

W : 137.0 H : 54.0 T : 16.0

B1N028

Front	ｾﾄﾞﾘｯｸ,ｸﾞﾛﾘｱ CEDRIC,GLORIA	PY32,Y33,MY33	91.06～
	ﾌﾟﾚｰﾘｰ,ﾘﾊﾞﾃｨ PRAIRE,LIBERTY	PM12,PNM12	98.11～

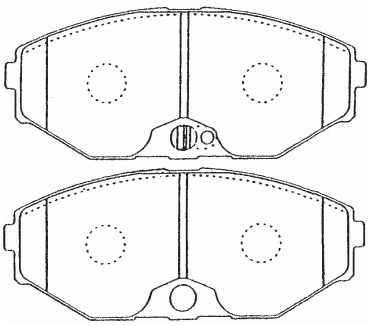

W : 139.1 H : 59.5 T : 15.0

B1N031

Front

アトラス ATLAS	SK2F23,SK4F23	97.08～
エルフ ELF	ASR2F23	99.06～

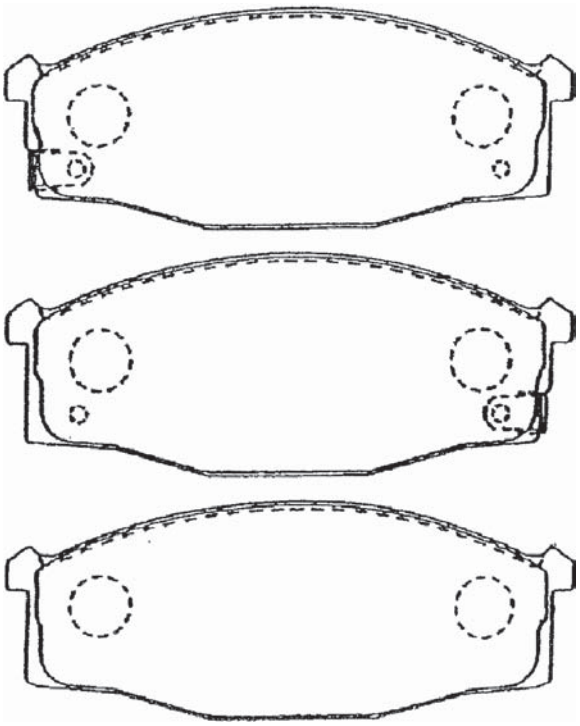

W : 142.0 H : 54.5 T : 18.0

B1N037

Front

キューブ CUBE	AZ10,ANZ10	99.11～
ウイングロード WINGROAD	WFY11,WRY11	99.05～

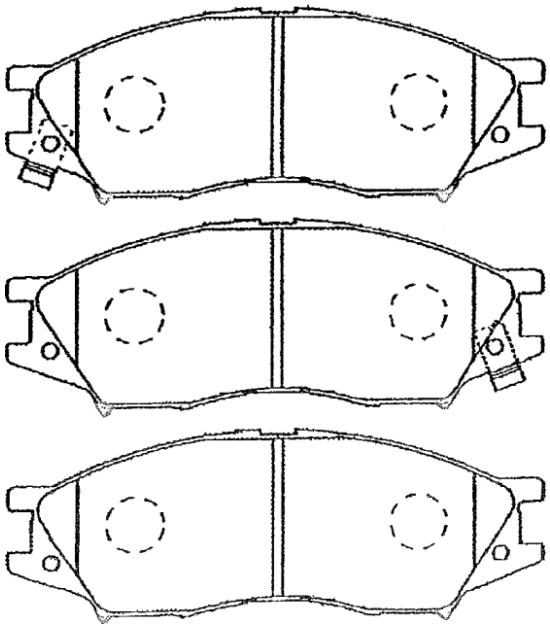

W : 135.0 H : 48.5 T : 15.0

B1N034

Front

サファリ SAFARI	WYY61,WTY61	97.10～
	WGY61,WRGY61	97.10～

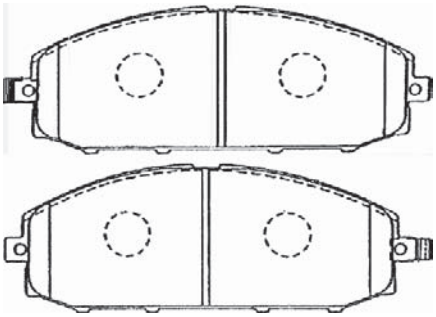

W : 166.0 H : 61.0 T : 19.0

B1N039

Front

セフィーロ CEFIRO	A33,PA33	98.12～
ティーノ TINO	V10,HV10	98.12～

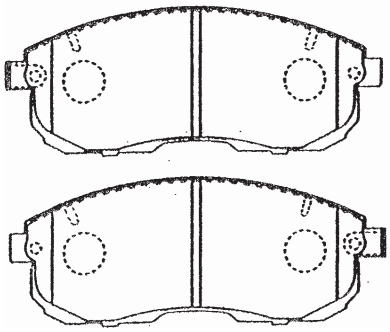

W : 137.0 H : 53.0 T : 17.0

B1N036

Front

シーマ CIMA	HF50,GF50	01.02～
フーガ FUGA	Y50,PY50,PNY50	04.10～

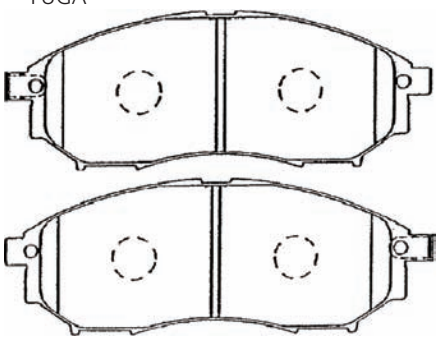

W : 157.0 H : 58.6 T : 16.0

B1N062

Front

テラノ,レグラス TERRANO,REGULU	JRR50,JLR50	96.08～
プレサージュ PRESAGE	U30,NU30,VU30	98.06～

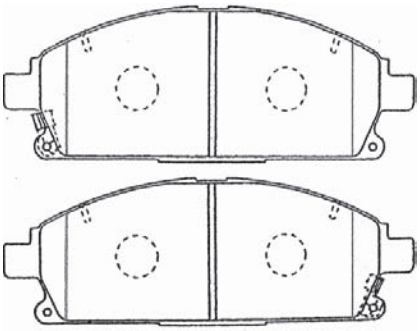

W : 158.9 H : 56.0 T : 16.5

ILLUSTRATION

B1N077 セレナ SERENA C25,NC25 05.05～

Front

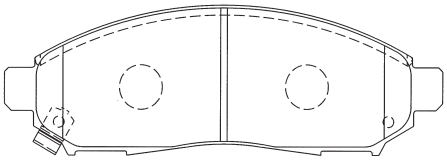

One Piece

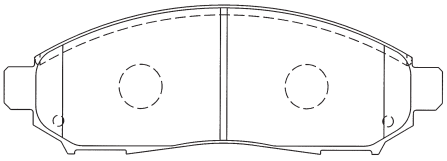

Three Pieces

W : 163.7 H : 54.0 T : 15.5

B1N079 ムラーノ MURANO TZ50,PZ50 04.09～

Front TNZ51,PNZ51 08.09～

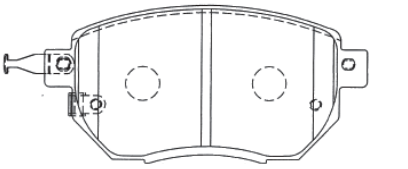

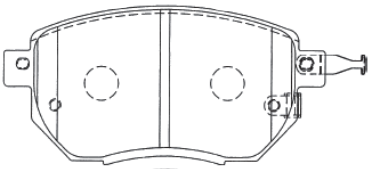

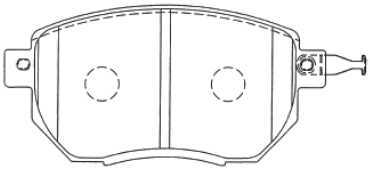

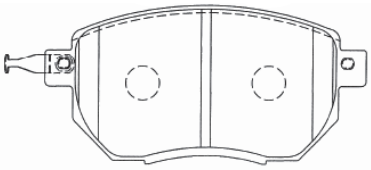

W : 135.6 H : 66.0 T : 15.5

B1N093 キューブ CUBE Z12 08.11～

Front マーチ MARCH K13 10.07～

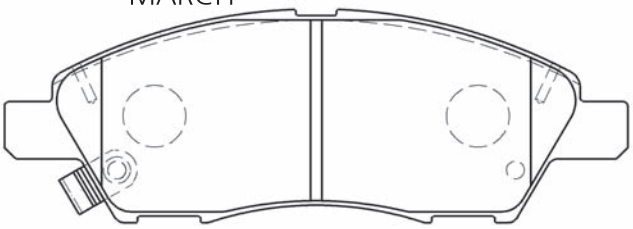

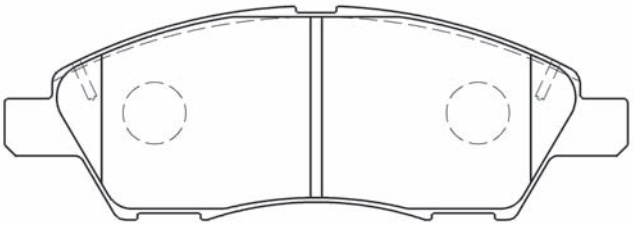

W : 138.7 H : 48.5 T : 14.0

B1N094 デュアリス DUALIS J10,NJ10 07.05～

Front エクストレイル X-TRAIL T31,NT31,TNT31 07.08～

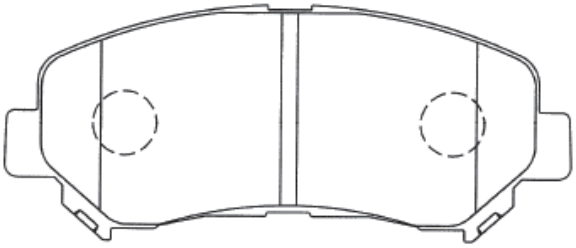

W : 141.8 H : 59.3 T : 17.0

B1N108

Front

スカイライン SKYLINE	CKV36	07.10～
フェアレディZ FAIRLADY Z	Z34	08.12～

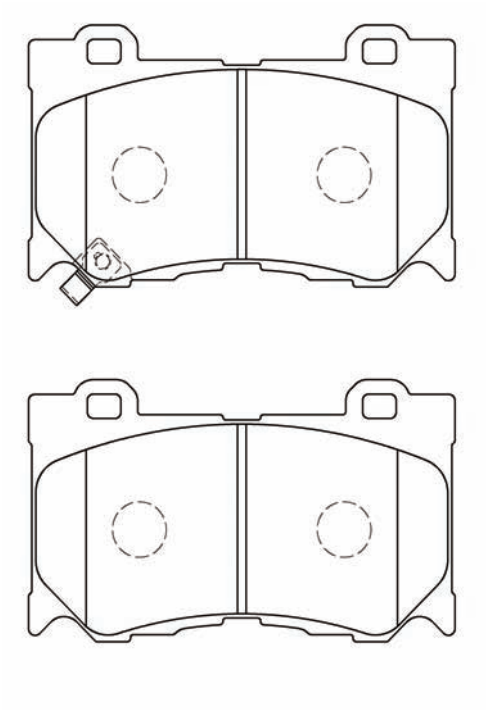

W : 127.2 H : 75.5 T : 16.0

B1N234

Front

マーチ MARCH	K12,AK12,BK12	02.02～
ティーダ,ラティオ TIDA/LATIO	C11,SC11,NC11	04.10～

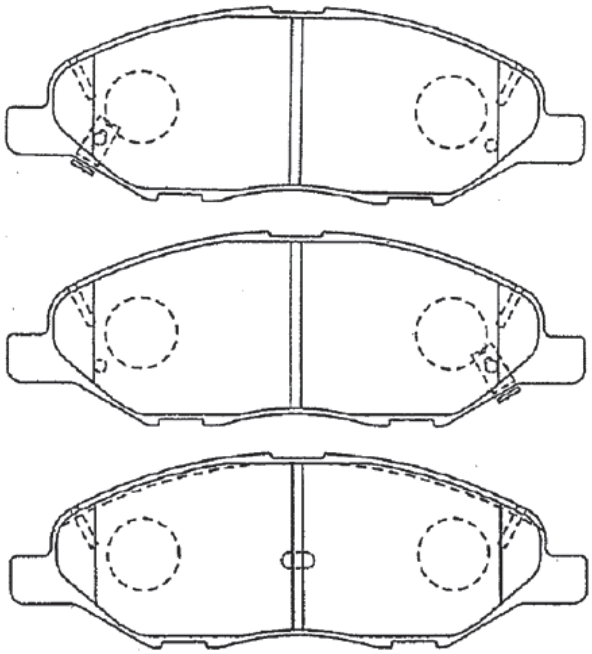

W : 144.2 H : 49.1 T : 14.5

B1N109

Front

エルグランド ELGRAND	TE52,TNE52	10.08～

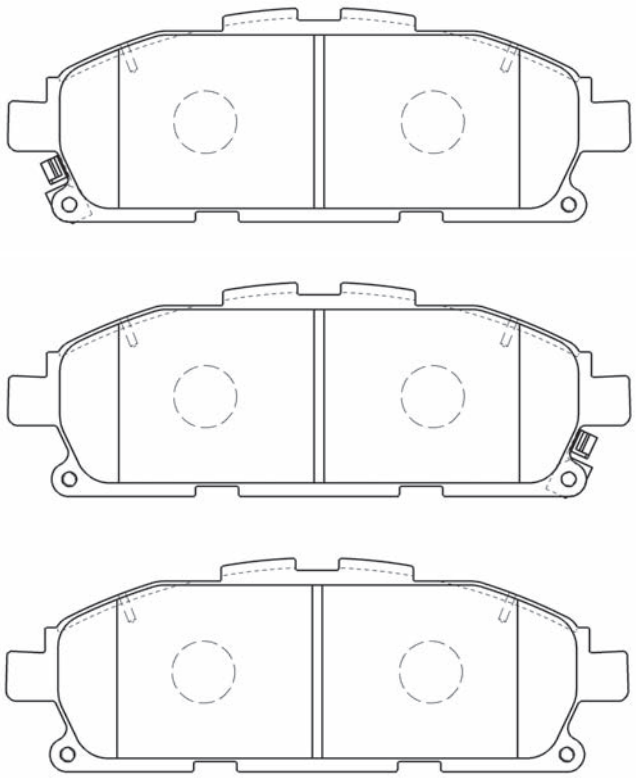

W : 158.8 H : 55.3 T : 15.0

B1N235

Front

キャラバン CARAVAN	VPE25,CWGE25	01.04～
コモ COMO	E25	01.05～

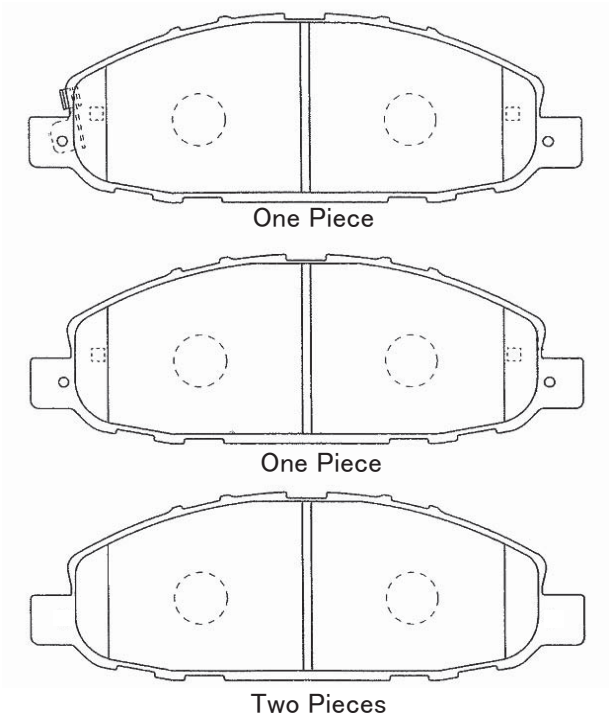

W : 168.6 H : 58.5 T : 17.0

ILLUSTRATION

B1N237 ウイングロード WINGROAD WFY10,WFGY10 96.05～
Front ファミリアワゴン FAMILIAWAGON WFY10,WEY10 96.05～

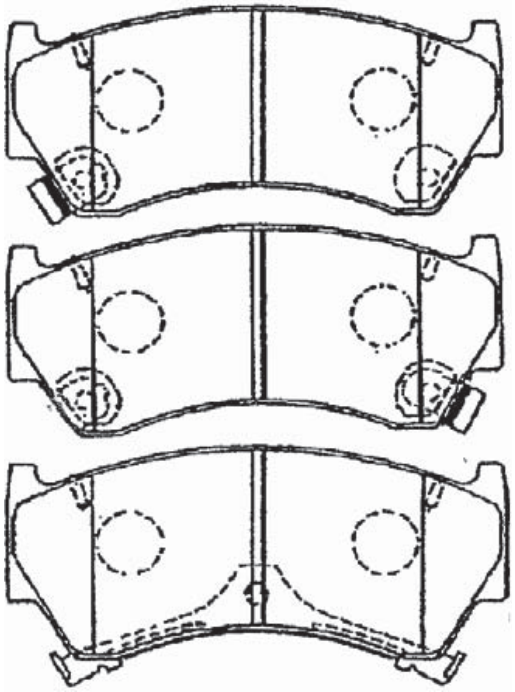

W : 108.5 H : 48.0 T : 16.0

B1N248 エクストレル X-TRAIL T32,NT32 13.12～
Front

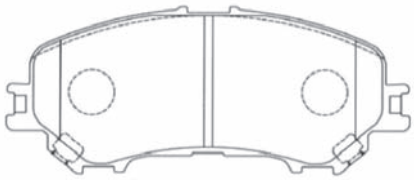

W : 142.0 H : 59.7 T : 17.0

B2N016 シルビア SILVIA PS13,KS13,S13,14 88.05～
Rear 180SX RS13,RPS13 91.01～

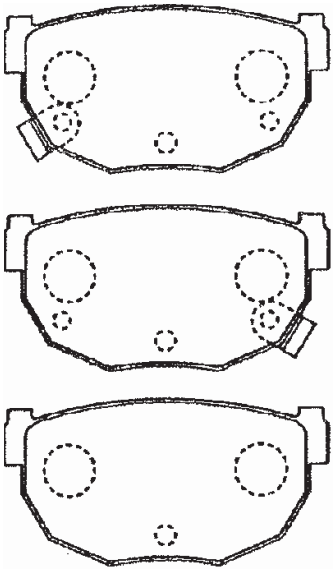

W : 85.3 H : 42.5 T : 14.0

B2N022 セフィーロ CEFIRO A32,PA32,WA32 94.08～
Rear ティーノ TINO V10,HV10 98.12～

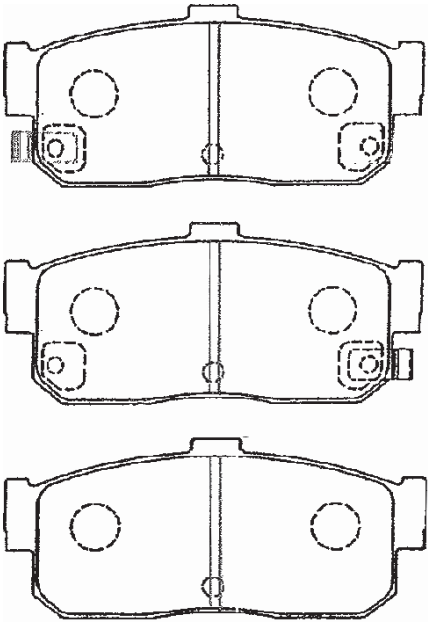

W : 105.3 H : 46.5 T : 16.0

B2N026 マーチ MARCH K11,HK11 92.01～
Rear プレオ PLEO RA1 98.10～

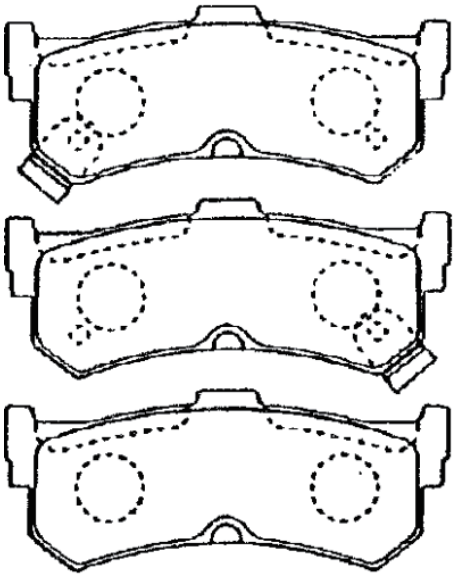

W : 85.4 H : 34.8 T : 13.0

B2N029 サニー SUNNY FB14,EB14,HB14 94.01～
Rear プレセア PRESEA R11,PR11,HR11 95.01～

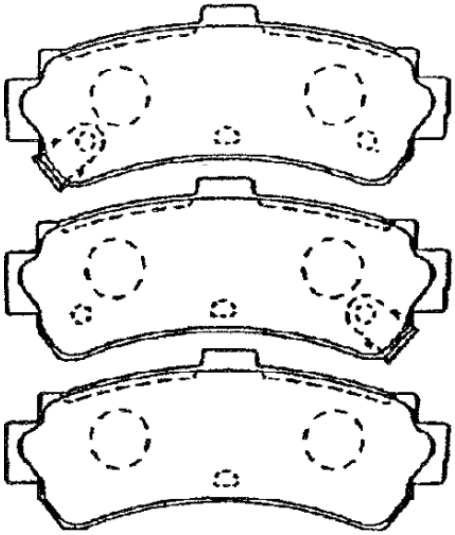

W : 99.5 H : 40.0 T : 15.0

B2N045 シーマ CIMA FPY31,FPAY31 88.01～
Rear スカイライン SKYLINE HR32,HCR32 89.05～

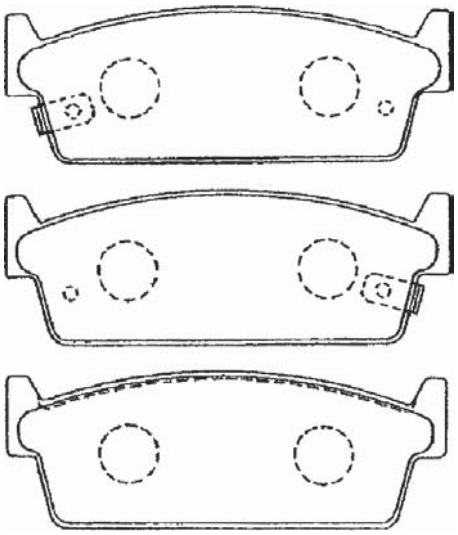

W : 98.8 H : 34.7 T : 15.3

B2N040 セフィーロ CEFIRO A33,PA33 00.12～
Rear ウイングロード WINGROAD WPY11 01.03～

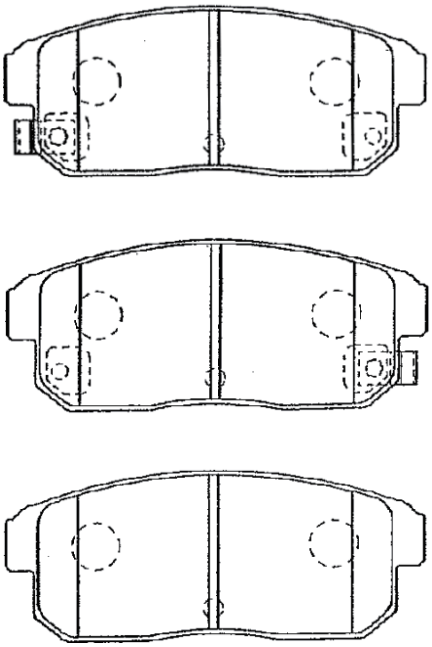

W : 105.5 H : 43.0 T : 16.0

B2N050 テラノ TERRANO WBYD21,LBYD21 87.10～
Rear

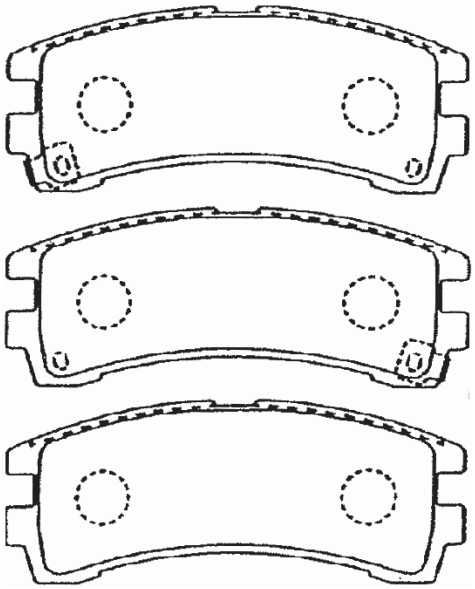

W : 114.8 H : 45.0 T : 16.0

ILLUSTRATION

B2N053 Rear

スカイライン SKYLINE	HCR32,ER33	89.05～
フェアレディZ FAIRLADY Z	GZ32,CZ32	89.07～

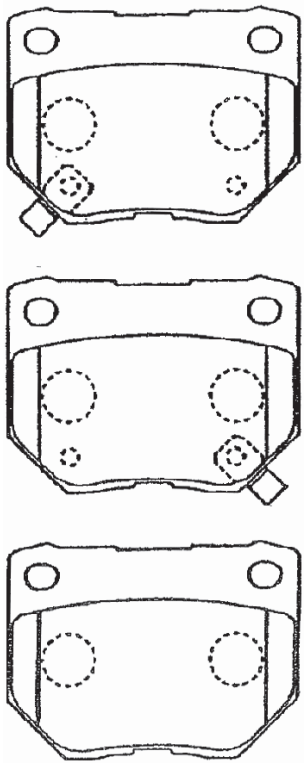

W : 73.3 H : 54.9 T : 16.0

B2N057 Rear

シーマ CIMA	FPY32,FHY33	93.09～
ステージア STAGEA	WGNC34	98.08～

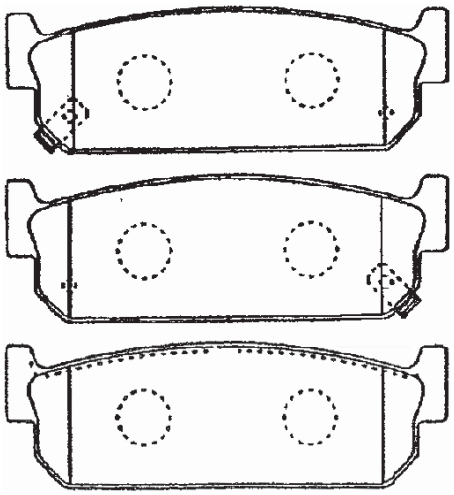

W : 108.6 H : 35.2 T : 15.0

B2N056 Rear

スカイライン SKYLINE	HR32,HCR32	90.04～
ステージア STAGEA	WHC34,WGC34	96.09～

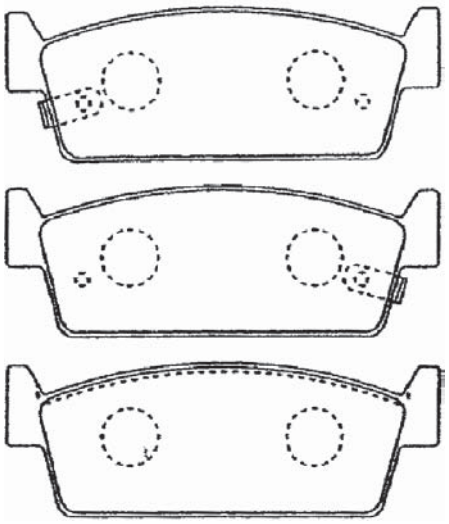

W : 98.9 H : 34.7 T : 15.0

B2N064 Rear

スカイライン SKYLINE	V35,HV35,NV35	01.06～
エルグランド ELGRAND	E51,NE51	02.05～

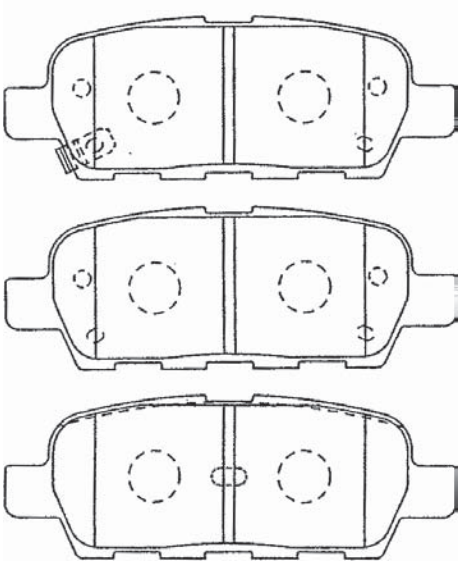

W : 105.4 H : 38.0 T : 14.5

B2N095

Rear

スカイライン SKLINE	V36	06.11～
デュアリス DUALIS	J10	07.08～

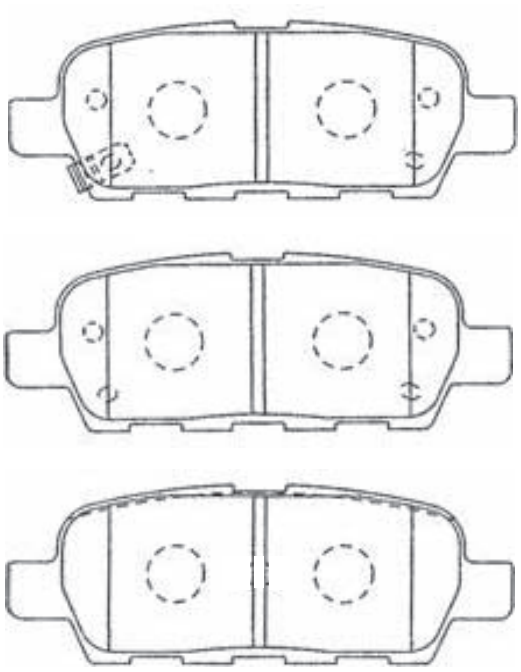

W : 105.4 H : 38.0 T : 14.0

B2N096

Rear

セレナ SERENA	C26	10.11～
エルグランド ELGRAND	TE52	10.08～

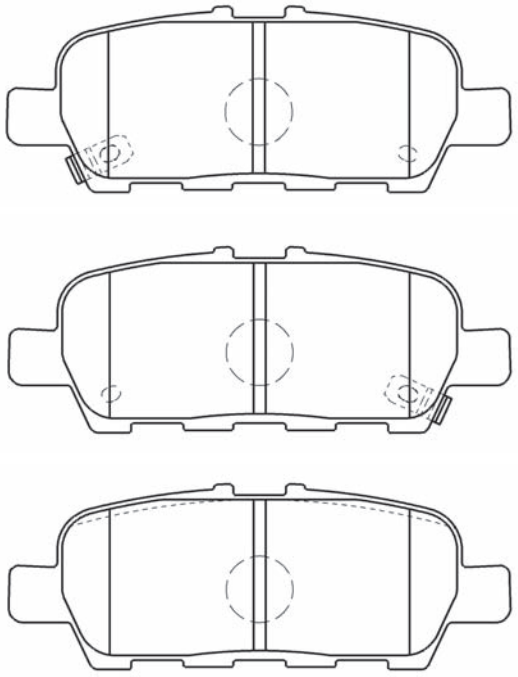

W : 105.5 H : 39.5 T : 14.5

B2N099

Rear

スカイライン SKYLINE	CKV36	07.10～
フェアレディZ FAIRLADY Z	Z34	08.12～

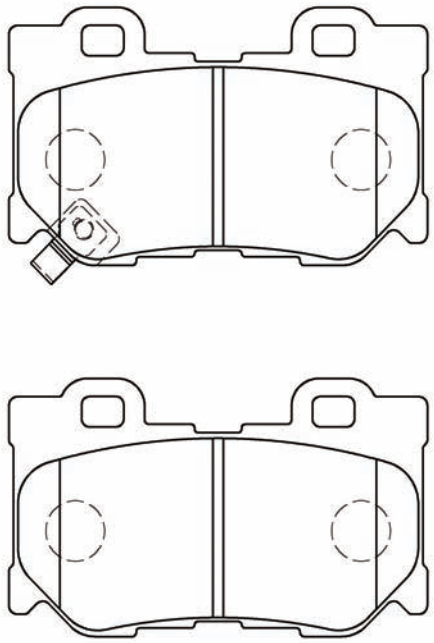

W : 99.8 H : 59.5 T : 14.0

ILLUSTRATION

C1N004

Front	シビック CIVIC	FE1,2	87.07～
	CR-X	EF6	87.07～

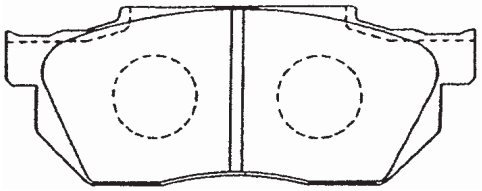

W : 116.0 H : 45.5 T : 15.0

C1N013

Front	シビック CIVIC, CR-X	EF8,9	89.08～
	レジェンド LEGEND	KA3,5,6	88.10～

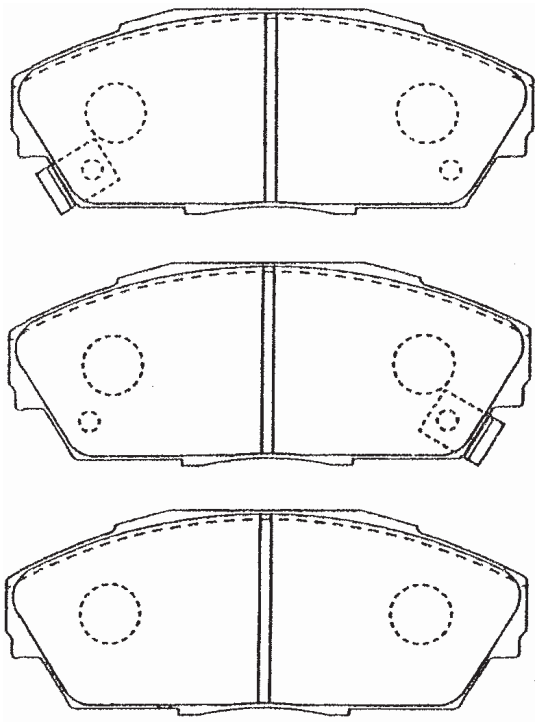

W : 129.0 H : 53.0 T : 17.0

C1N016

Front	シビック CIVIC	EG4,5,6,EU1,2	00.09～
	ストリーム STREAM	RN1,2	00.10～

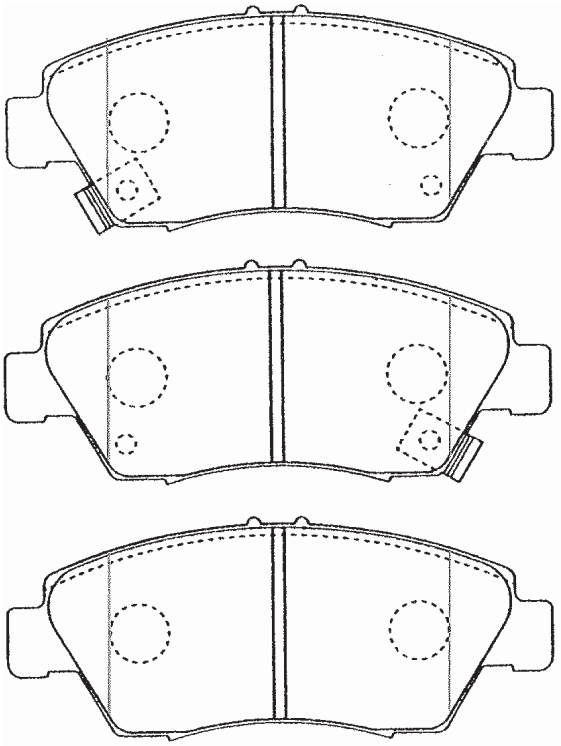

W : 136.5 H : 58.2 T : 16.5

C1N018

Front	アコード,トルネオ ACCORD,TORNEO	CF4,5,CL2,3,CD6	93.09～
	オデッセイ ODYSSEY	RA1,2,3,4	94.10～

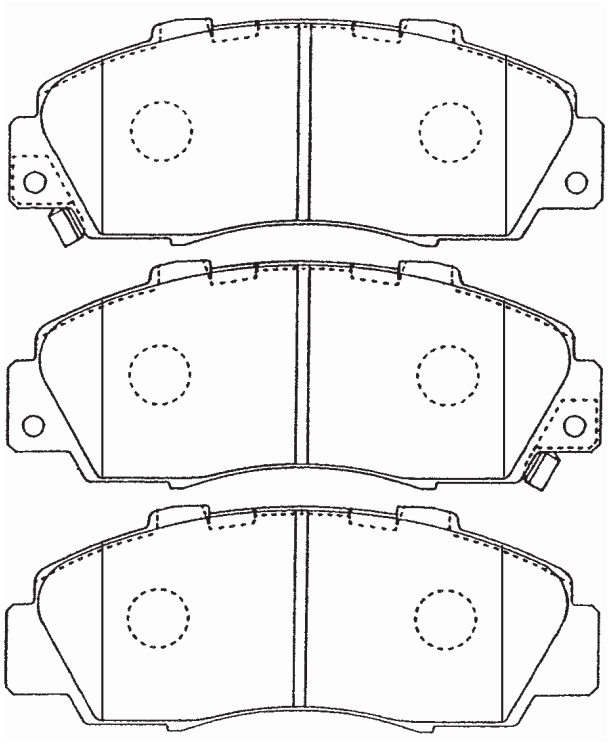

W : 148.7 H : 57.5 T : 17.5

C1N020

Front	シビックフェリオ CIVIC FERIO	EG7,8,EH1,EK2,3	91.07～
	シビック CIVIC	EG4,5,EK2,3	91.09～

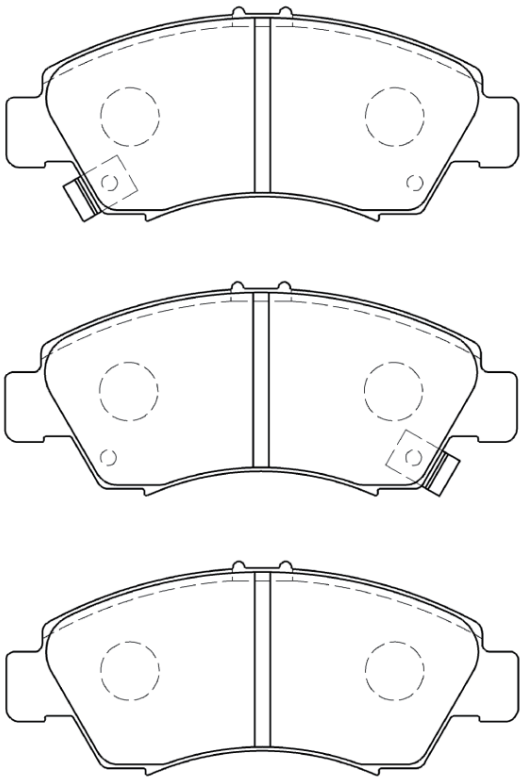

W : 131.5 H : 54.8 T : 15.0

C1N026

Front	アコード,トルネオ ACCORD,TORNEO	CL1	00.06～
	オデッセイ ODYSSEY	RA6,7,8,9	99.12～

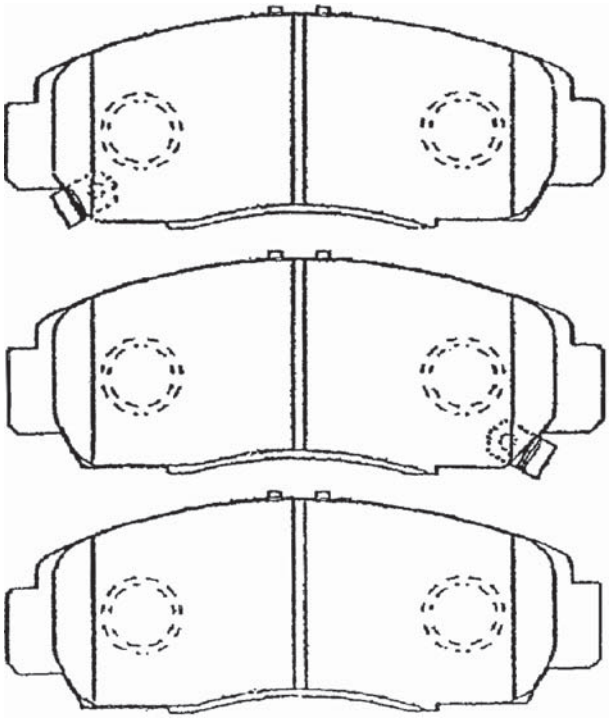

W : 148.7 H : 58.2 T : 17.0

C1N024

Front	インテグラ INTEGRA	DC1,2,DB6,7,8	93.05～
	オルティア ORTHIA	EL1,2,3	96.03～

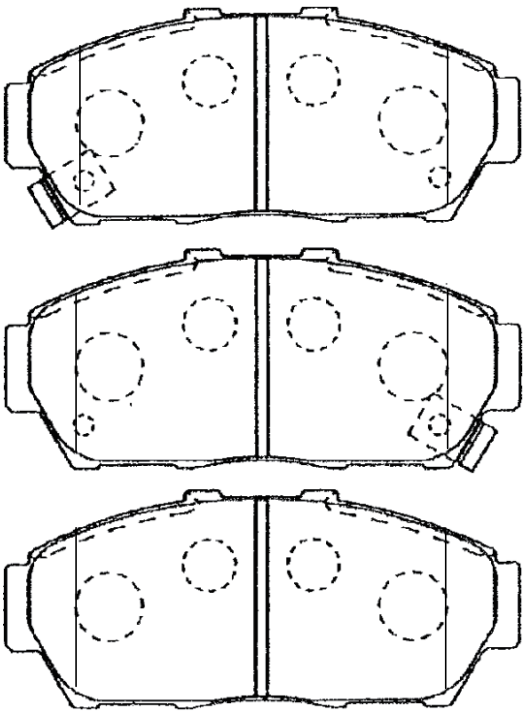

W : 129.1 H : 54.7 T : 16.5

C1N030

Front	ストリーム STREAM	RN3,4	00.10～
	エディックス EDIX	BE2,3,4	04.07～

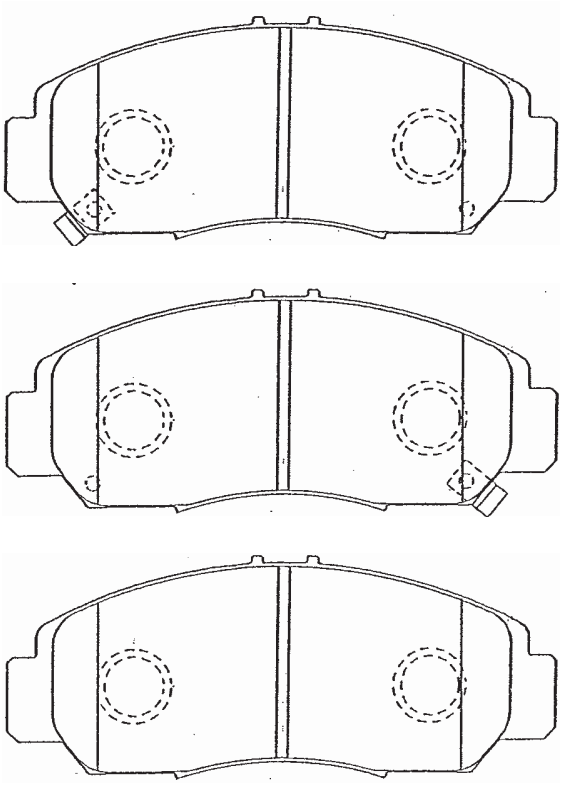

W : 148.7 H : 59.7 T : 15.5

ILLUSTRATION

C1N031 CR-V RD5,RD6 01.09～

Front

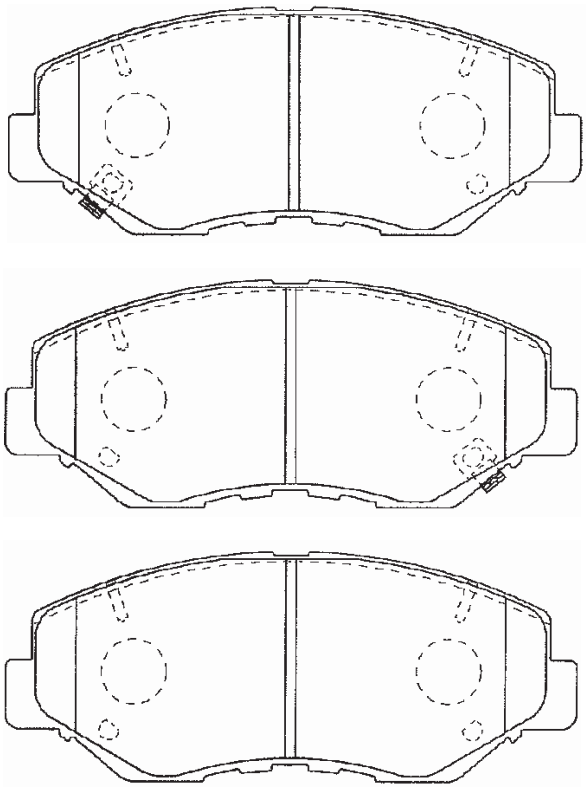

W : 141.7 H : 56.8 T : 17.0

C1N034 アコード ACCORD CD7,CE1 94.02～

Front

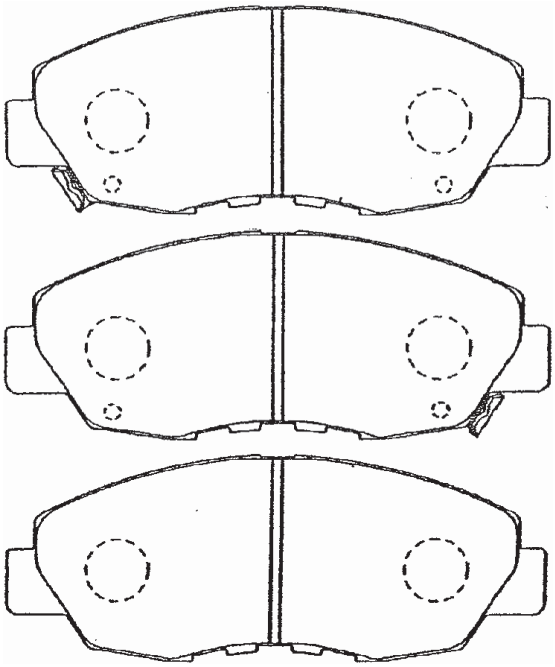

W : 137.8 H : 52.5 T : 18.5

C1N033 アコード ACCORD CA2,3,5 87.05～

Front インテグラ INTEGRA DA5,7 89.04～

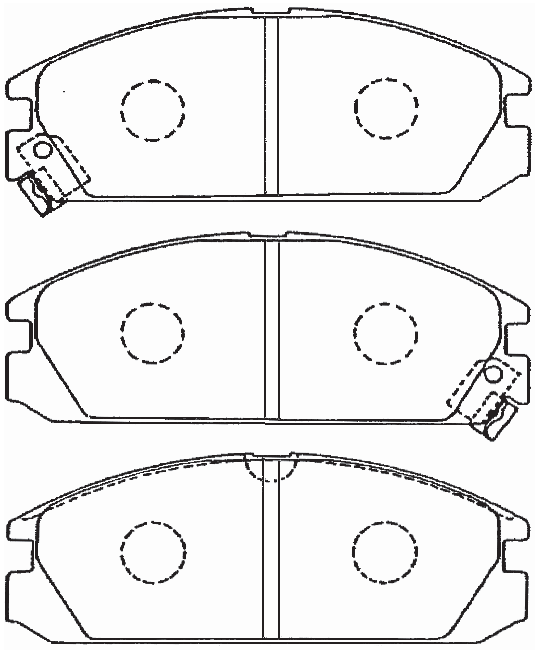

W : 127.8 H : 48.5 T : 15.0

C1N035 CR-V RD1,2 95.10～

Front

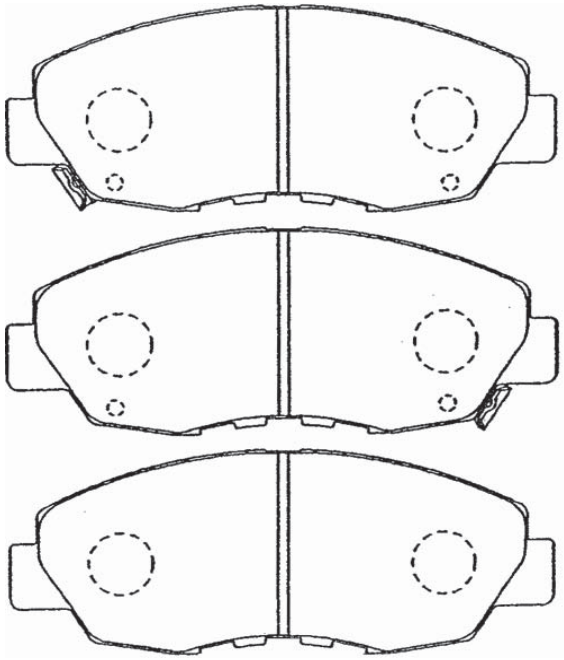

W : 137.8 H : 52.5 T : 17.0

C1N036 シビッククーペ CIVIC COUPE EJ7 96.01～

Front

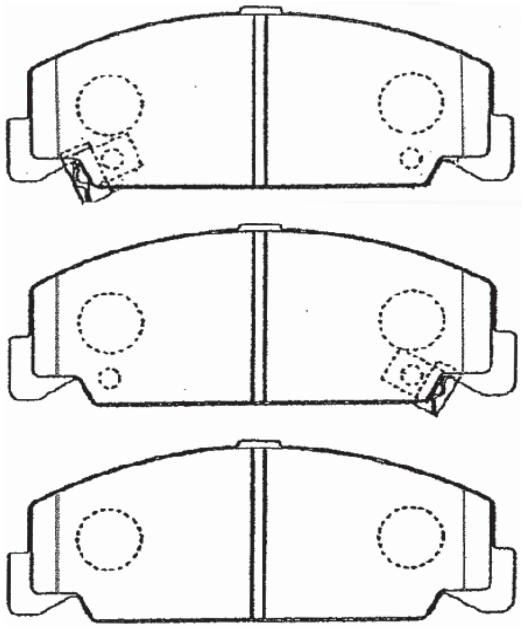

W : 127.5 H : 48.0 T : 15.0

C1N041 シビック CIVIC ES9 01.12～

Front

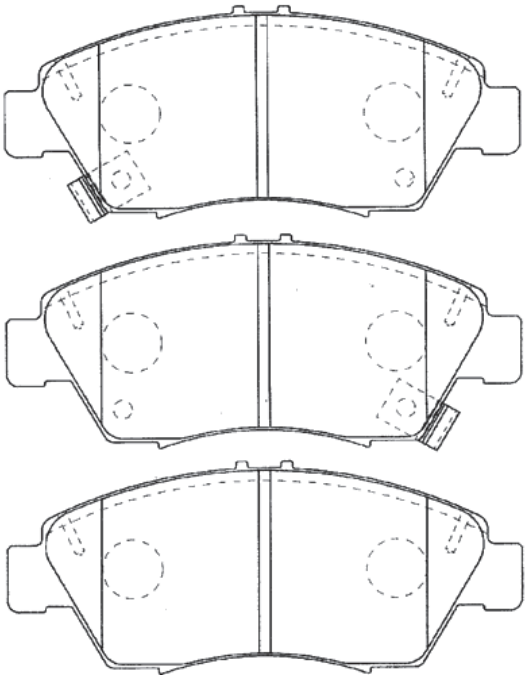

W : 136.5 H : 58.2 T : 16.5

C1N037 CR-V RD4,5(Without ABS 1.09～

Front

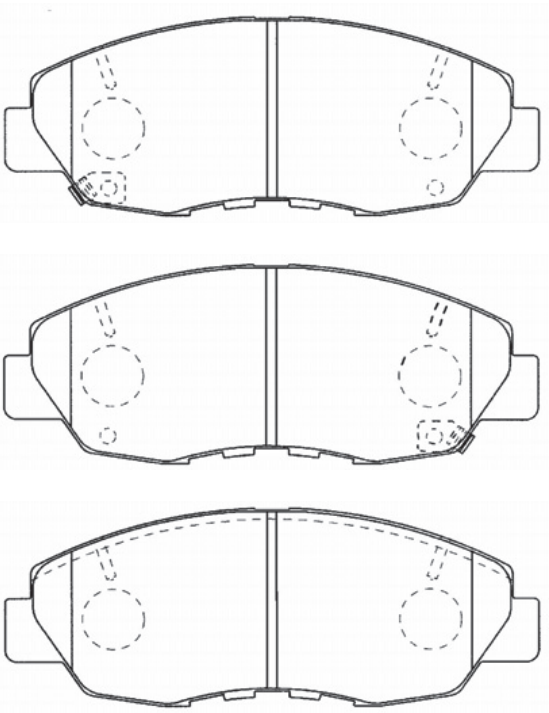

W : 137.8 H : 52.5 T : 17.0

C1N042 エリシオン ELYSION RR1,2,3,4 04.05～

Front

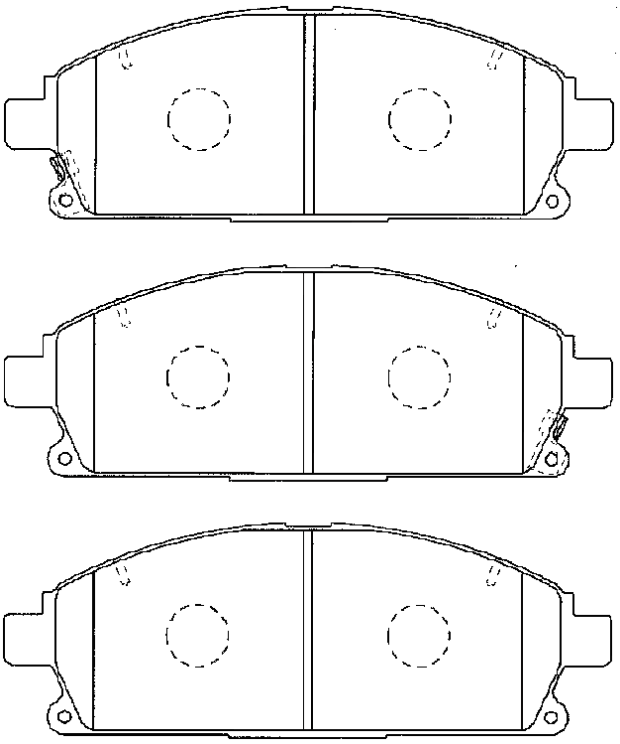

W : 158.9 H : 56.0 T : 16.5

ILLUSTRATION

C1N044 レジェンド LEGEND KB1 04.10～

Front

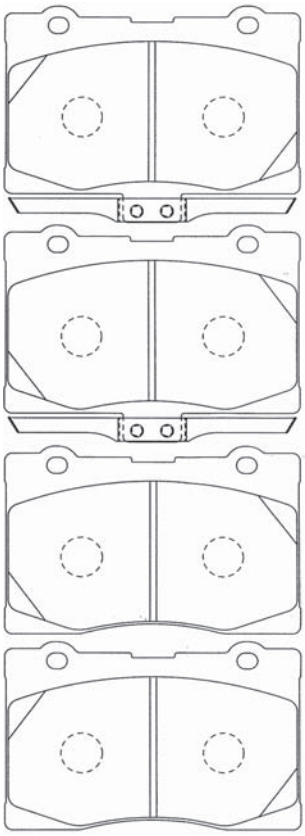

W : 116.6 H : 76.2 T : 16.0

C1N077 フィット FIT GE9 07.10～ / フリード FREED GB3 10.11～

Front

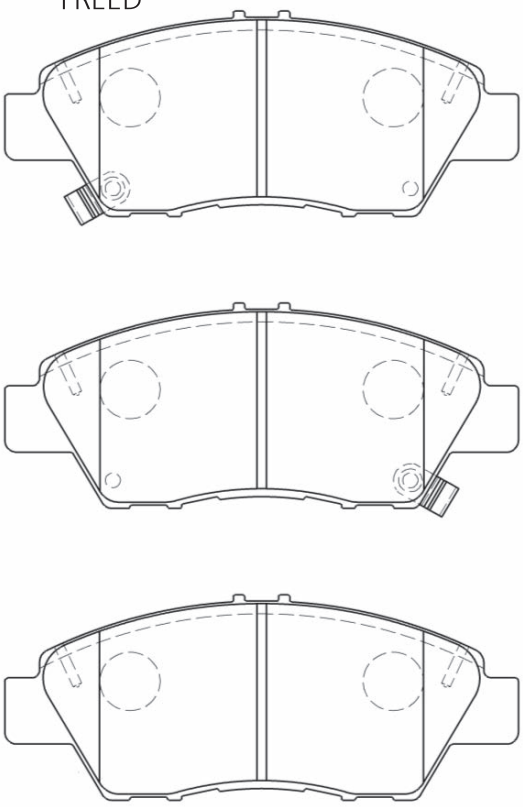

W : 136.5 H : 56.3 T : 16.0

C1N048 CR-V RE3,4 06.10～

Front

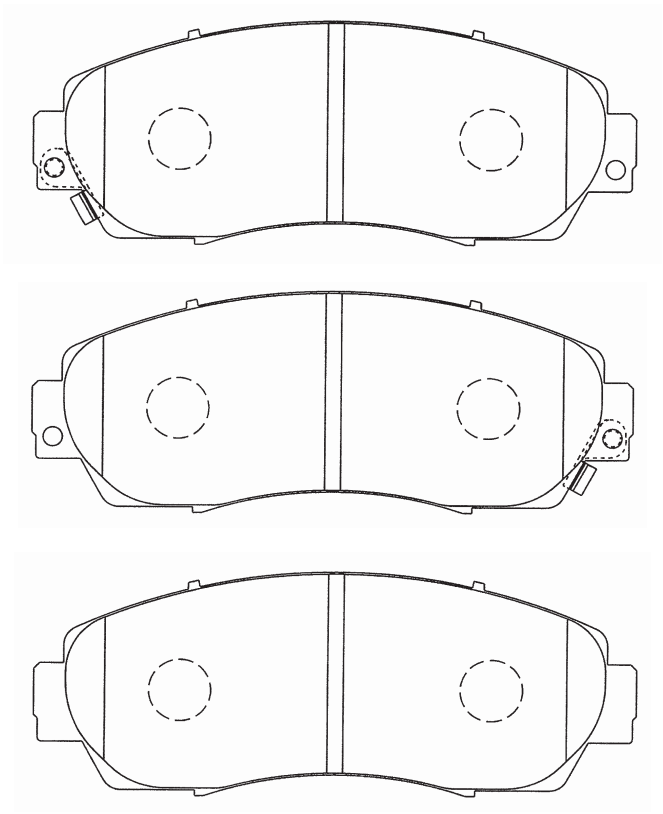

W : 154.7 H : 58.5 T : 18.0

C1N083 UKアコード UK ACCORD CL7 01.04～

Front

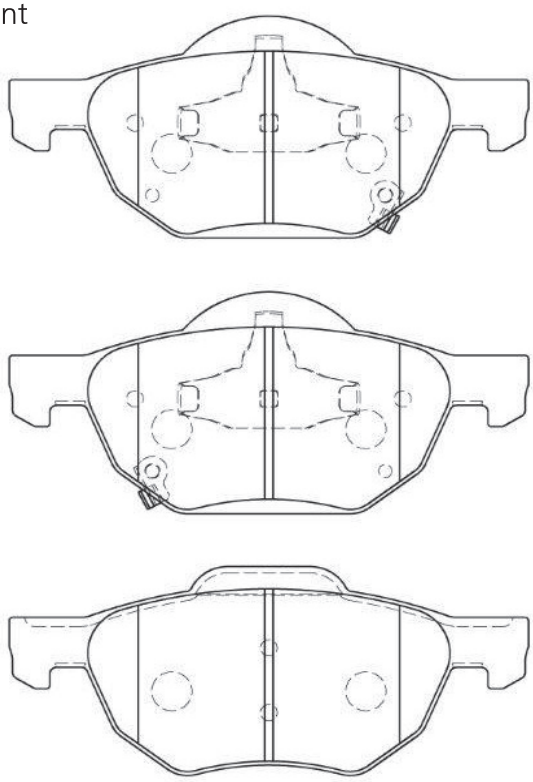

インナー Inner **W : 155.2H : 68.5 T : 16**

アウター Outer **W : 155.2H : 64.5 T : 16**

C1N085 UKｼﾋﾞｯｸ UK CIVIC FN,FK 01～

Front

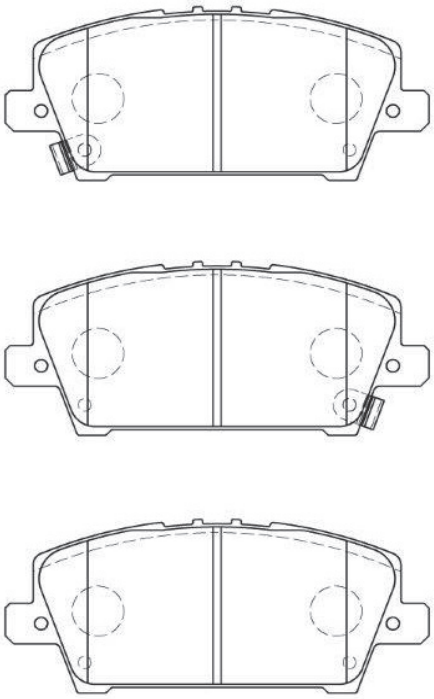

W : 131.6 H : 55.7 T : 16.5

C2N015 ﾌﾟﾚﾘｭｰﾄﾞ PRELUDE BA8,9,BB1 91.09～

Rear ｲﾝﾃｸﾞﾗ INTEGRA DC2,8 98.01～

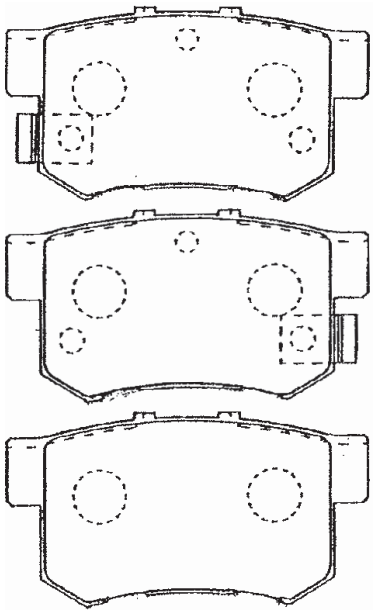

W : 89.0 H : 48.0 T : 15.0

ILLUSTRATION

C2N021

Rear

ｵﾃﾞｯｾｲ ODYSSEY	RA1,2,3,4,5,6,8,9	94.10～
ｽﾃｯﾌﾟﾜｺﾞﾝ STEP WGN	RF1,2	96.05～

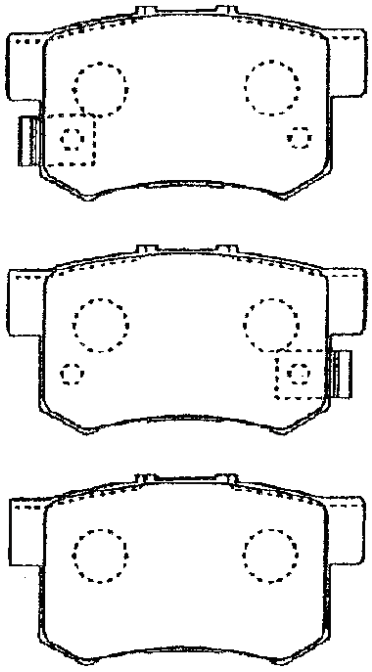

W : 89.0 H : 48.0 T : 15.0

C2N061

Rear

CR-V	RD4,5,6,7	01.09～

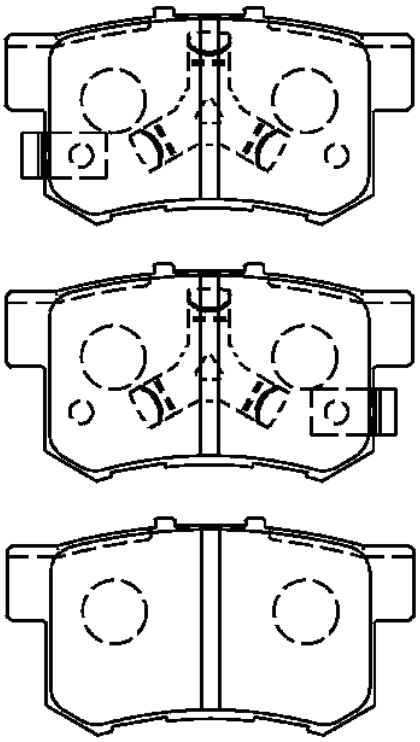

W : 89.1 H : 47.5 T : 15.0

C2N022

Rear

ｼﾋﾞｯｸﾌｪﾘｵ CIVIC FERIO	EG8,9,EJ3,EK3,4	91.09～
ｲﾝﾃｸﾞﾗ INTEGRA	DA5,6,7,DB1,6,7	91.10～

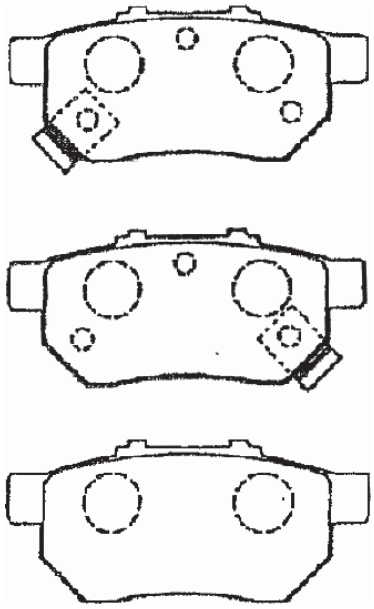

W : 89.0 H : 36.5 T : 12.6

C2N139

Rear

ｳﾞｪｾﾞﾙ VEZEL (含むHV)	RU1,2,3,4	13.12～
ｵﾃﾞｯｾｲ ODYSSEY (HV)	RC4(車台番号:1150001-)	16.02～

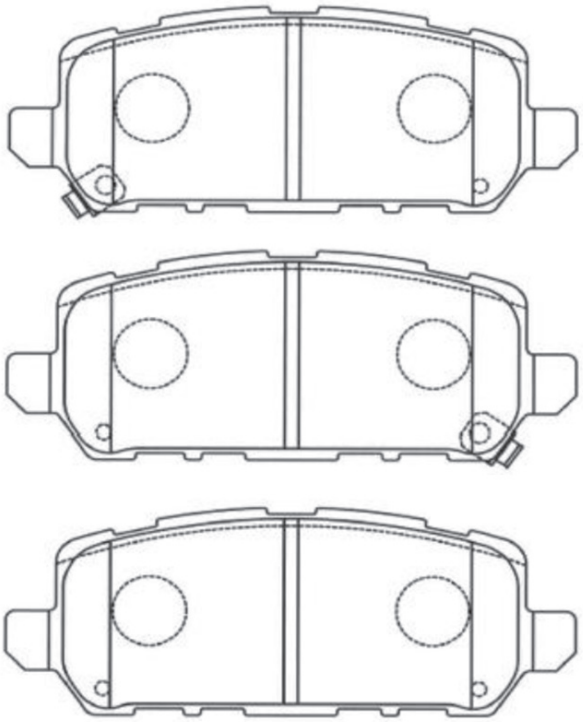

W : 116.7 H : 45.2 T : 15.5

D1N003 パジェロ PAJERO

V63W,65W,68W 99.10～

Front

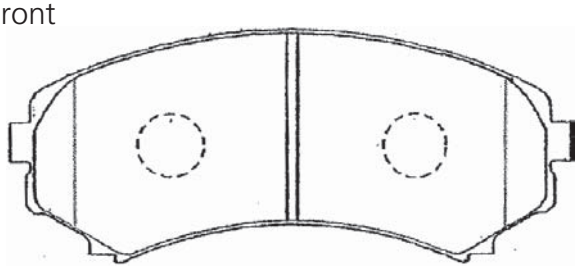

W : 139.2 H : 58.5 T : 15.5

D1N004 ランサー LANCER / ミラージュディンゴ MIRAGE DINGO

CS5A,5W 00.05～

CQ1A,2A,5A 00.12～

Front

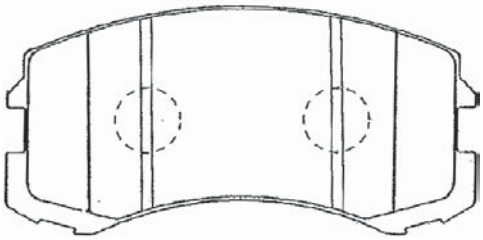

W : 114.0 H : 56.5 T : 15.5

D1N005 キャンター CANTER

FB70A,FD70A 02.06～

FC70C,71C,72C 02.06～

FG82E,88E 02.06～

Front

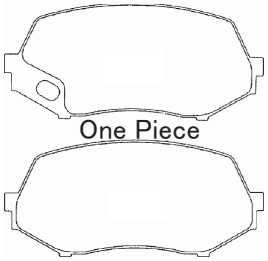

W : 123.0 H : 56.3 T : 17.5

D1N006 キャンター CANTER

FE70E(B32,B6E2) 02.06～

FE73C(B1,4,EV6) 02.06～

Front

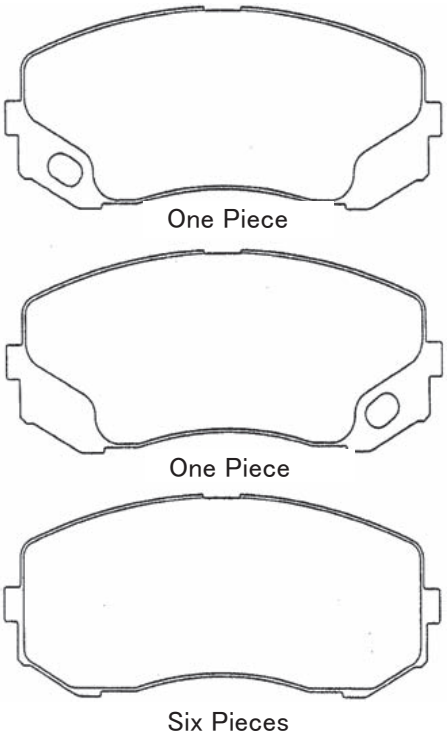

W : 139.1 H : 58.8 T : 19.5

D1N011 ミラージュ MIRAGE / ランサー LANCER

C51A,52A,61A 89.09～

C61A,62A,64A 89.09～

Front

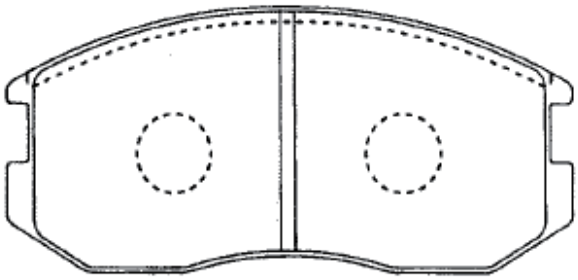

W : 114.0 H : 49.8 T : 15.0

D1N013 ミラージュ,ランサー MIRAGE,LANCER / リベロ,カーゴ LIBERO,CARGO

CA1A,2A,CC3A 91.08～

CB2W,4W,5W,1V92.04～

Front

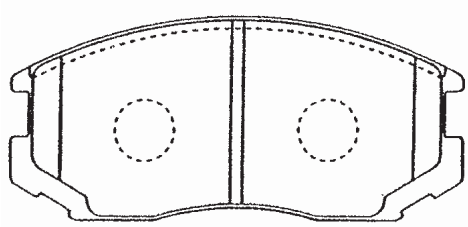

W : 114.0 H : 49.8 T : 15.0

ILLUSTRATION

D1N014

Front

ﾐﾗｰｼﾞｭ,ﾗﾝｻｰ MIRAGE,LANCER	CA1A,2A,CB1A	91.08～
ﾘﾍﾞﾛ,ｶｰｺﾞ LIBERO,CARGO	CB2W,1V,2V	92.04～

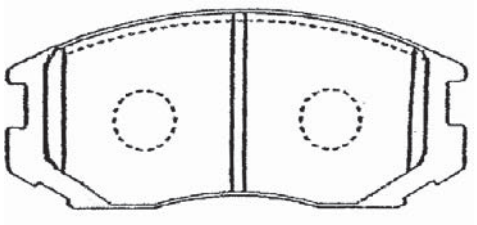

W : 114.0 H : 49.8 T : 15.0

D1N021

Front

ﾊﾟｼﾞｪﾛﾐﾆ PAJERO MINI	H51A,53A,58A	97.06～
ﾊﾟｼﾞｪﾛｲｵ PAJERO io	H61W,66W,76W	98.03～

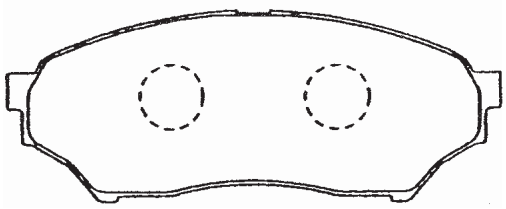

W : 123.0 H : 47.9 T : 15.5

D1N019

Front

ﾊﾟｼﾞｪﾛﾐﾆ PAJERO MINI	H51A,56A	94.11～
ﾊﾟｼﾞｪﾛJr PAJERO Jr	H57A	95.10～

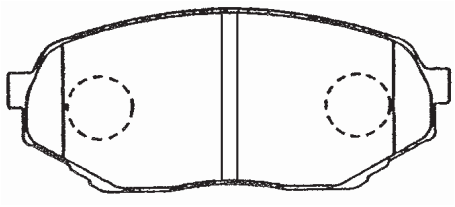

W : 110.2 H : 46.0 T : 14.5

D1N020

Front

ｷｬﾝﾀｰ CANTER	FE537,538	96.11～
ﾛｰｻﾞ ROSA	BE439,449,459	95.04～

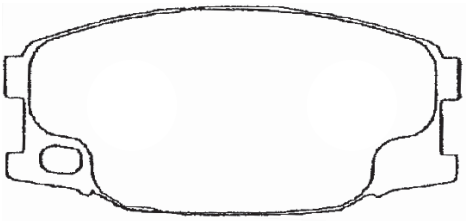

One Piece

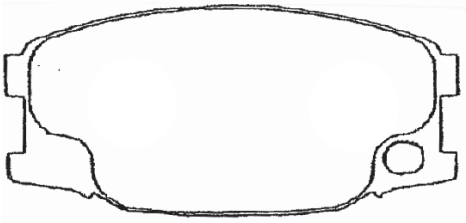

One Piece

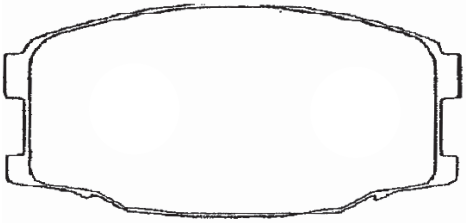

Six Pieces

W : 125.0 H : 60.0 T : 19.5

D1N033

Front

ﾊﾟｼﾞｪﾛ PAJERO	V14V,24V,34V	90.10～
ｽﾄﾗｰﾀﾞ STRADA	K34T	91.03～

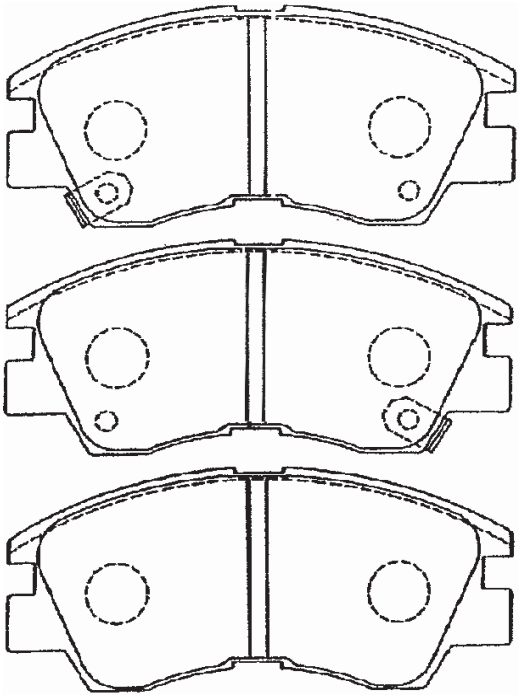

W : 127.9 H : 57.0 T : 17.0

D1N034 デリカ DELICA

Front

PD4W,8W,PE8W	94.03～
ミラージュ MIRAGE CJ4A	95.08～

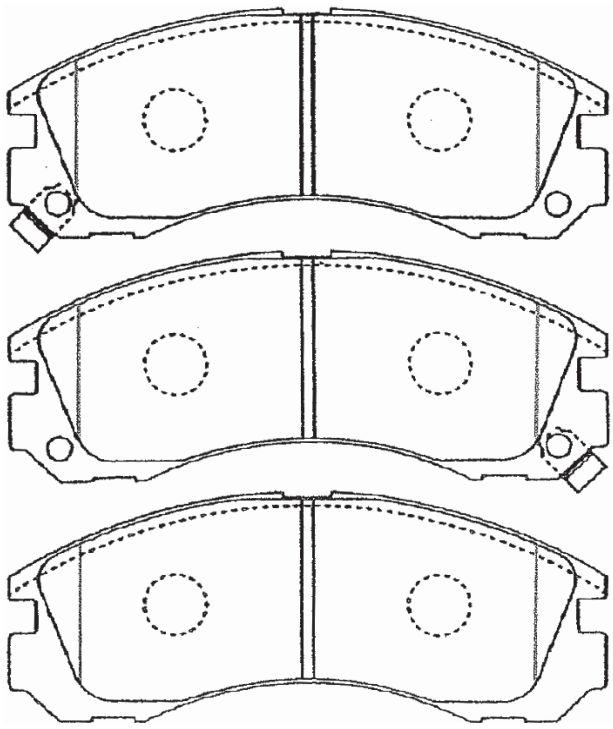

W : 149.8 H : 58.6 T : 15.6

D1N038 キャンター CANTER

Front

FB308,511,FE300	91.04～
FA510	97.06～

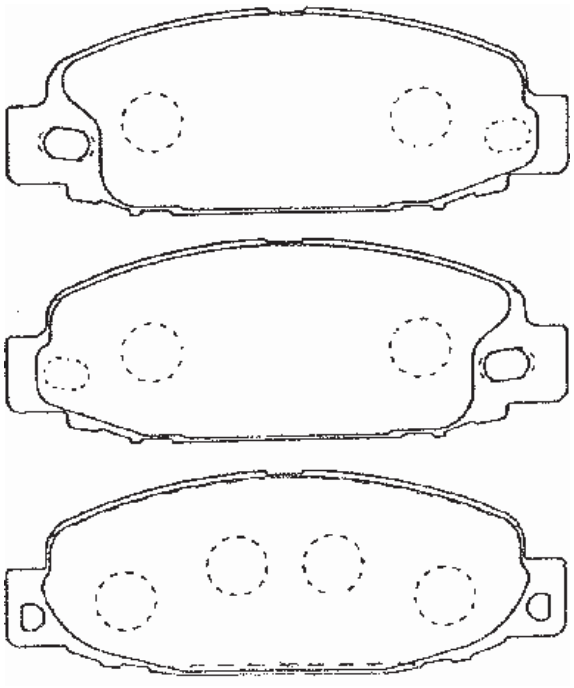

W : 140.2 H : 51.5 T : 18.0

D1N035 シャリオ CHARIOT / レグナム LEGNUM

Front

N33W,38W,48W	91.05～
EA1W,4W,5W,7W	96.08～

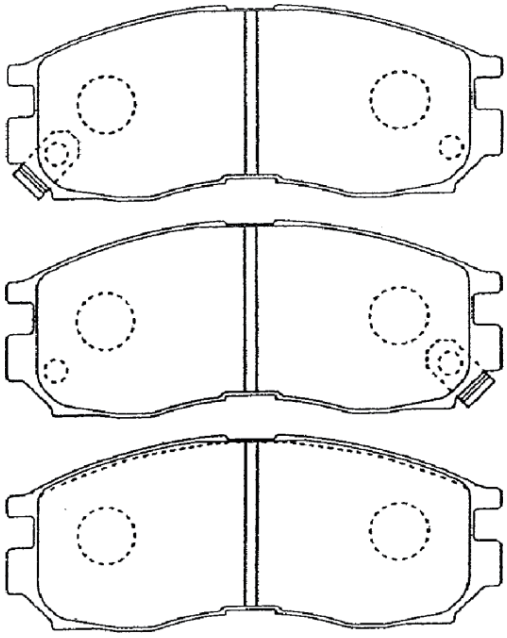

W : 127.8 H : 52.0 T : 16.0

D1N039 キャンター CANTER

Front

FB300,308	85.09～
FE300,320,301	85.09～

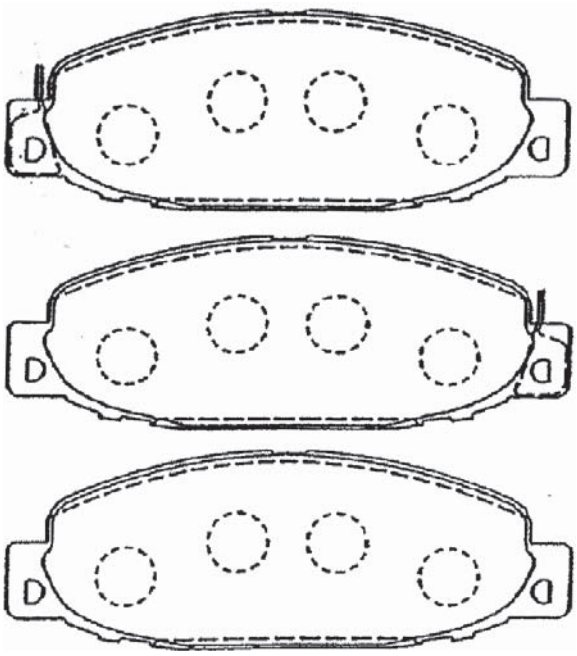

W : 140.2 H : 51.5 T : 18.0

ILLUSTRATION

D1N042

Front

ﾃﾞﾘｶ DELICA	P02T,13T,15T,25T	94.03～
ｽﾍﾟｰｽｷﾞｱ SPACEGEAR	PA4W,5W,PB5W	94.03～

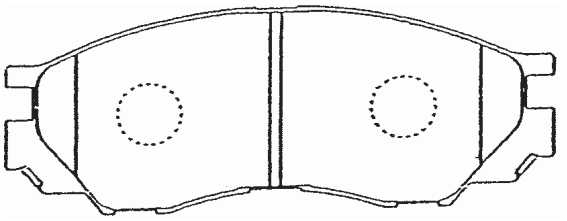

W : 137.7 H : 55.0 T : 15.6

D1N050

Front

ｺﾙﾄ COLT	Z21A,23A,24W	02.11～

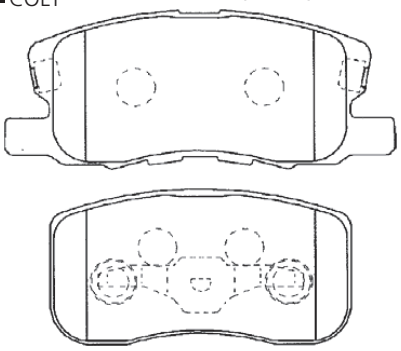

ｲﾝﾅ Inner **W : 122.2 H : 51.5 T : 15.5**

ｱｳﾀ Outer **W : 94.0 H : 50.0 T : 15.5**

D1N045

Front

ｼｬﾘｵｸﾞﾗﾝﾃﾞｨｽ CHARIOT GRANDIS	N84W,94W,86W	97.08～
RVR	N61W,71W,73WG	97.09～

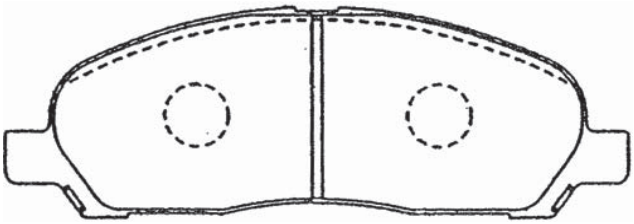

W : 156.9 H : 53.5 T : 16.0

D1N054

Front

ｷｬﾝﾀｰ CANTER	FB70A,FD70A	02.06～
	FB700,70B	03.07～

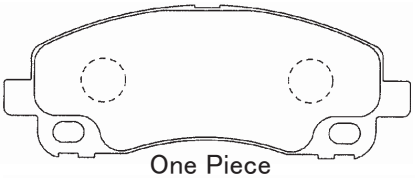

One Piece

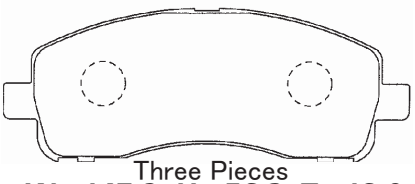

Three Pieces

W : 147.2 H : 56.3 T : 18.0

D1N046

Front

ﾐﾆｶ,ﾄｯﾎﾟ MINICA,TOPPO	H41A,46A,47A	98.08～
eKﾜｺﾞﾝ eK WAGON	H81W	01.10～

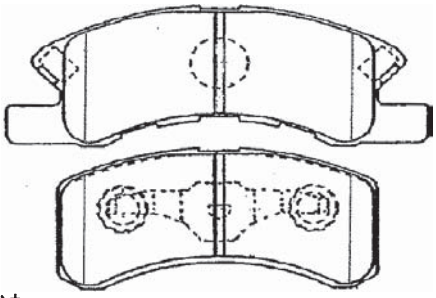

ｲﾝﾅ Inner **W : 122.0 H :44.3 T : 15.0**

ｱｳﾀ Outer **W : 92.0 H : 44.3 T : 15.0**

D1N048

Front

ｼｬﾘｵｸﾞﾗﾝﾃﾞｨｽ CHARIOT GRANDIS	NA4W,84W,94W	00.04～
ﾃﾞｨｵﾝ DION	CR5W	02.05～

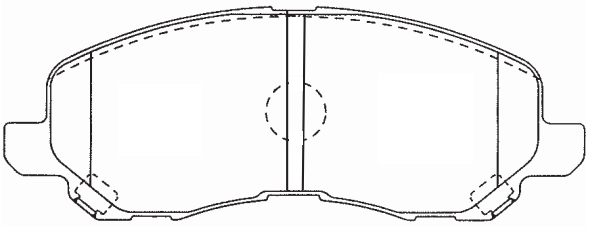

W : 145.0 H : 54.5 T : 15.8

D1N075

Front

ｱｲﾐｰﾌﾞ i-MIEV	HA3W	10.01～

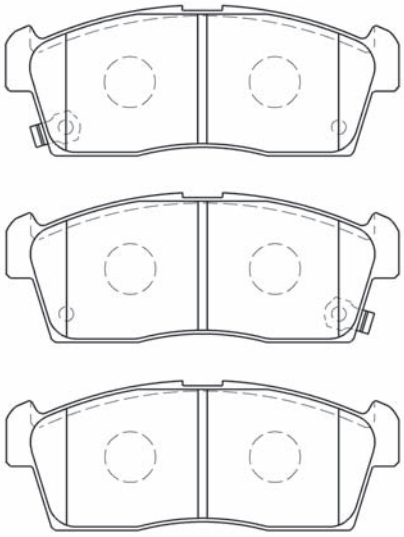

W : 108.5 H : 41.9 T : 15.0

D1N081 キャンター CANTER FBA00 10.11～

Front

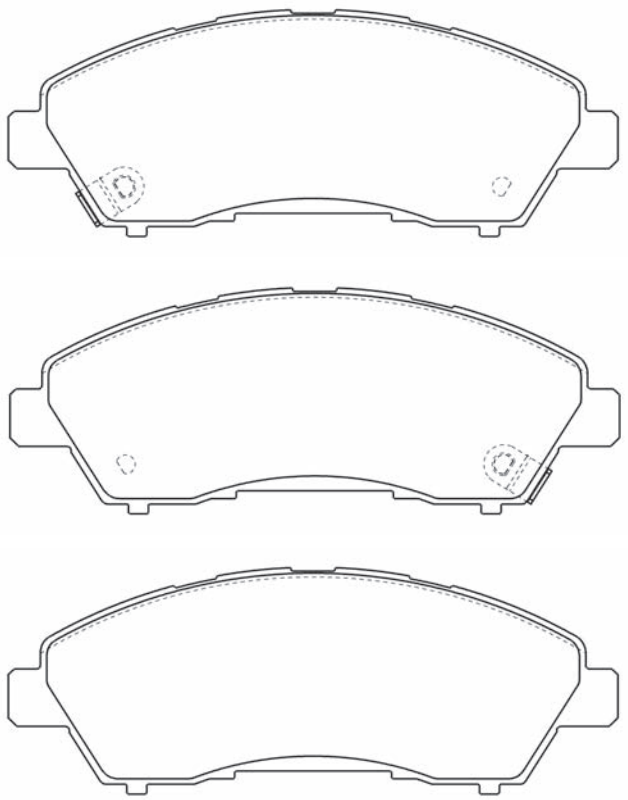

W : 153.4 H : 58.0 T : 18.0

D1N083 キャンター CANTER FE70B 09.05～

Front

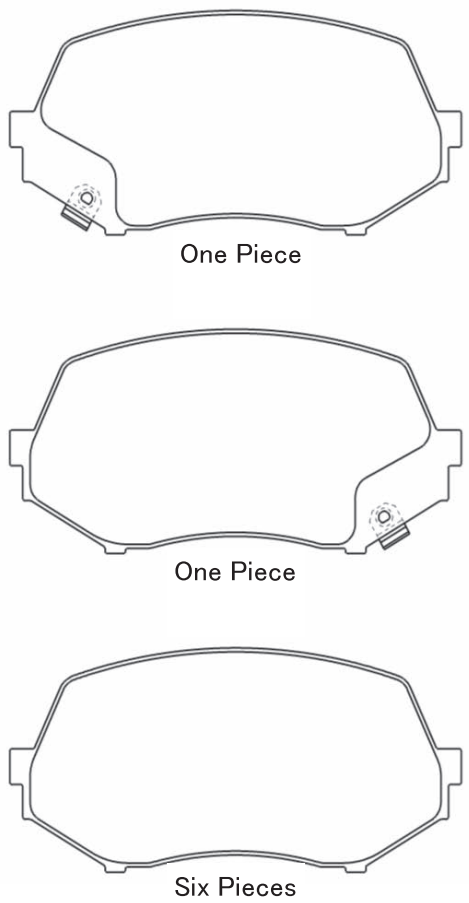

W : 123.0 H : 56.3 T : 17.5

D1N082 キャンター CANTER FD70 09.05～

Front/Rear B(シングルキャブ,ダブルタイヤ)

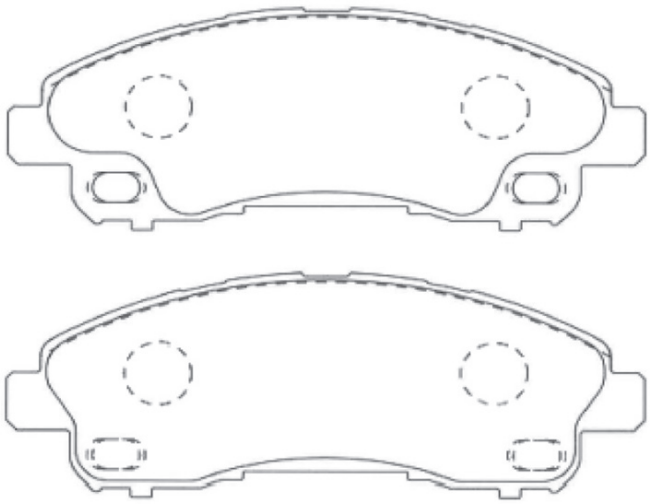

W : 153.5 H : 57.8 T :18.0

ILLUSTRATION

D1N084 キャンター CANTER FE73B 09.05～

Front

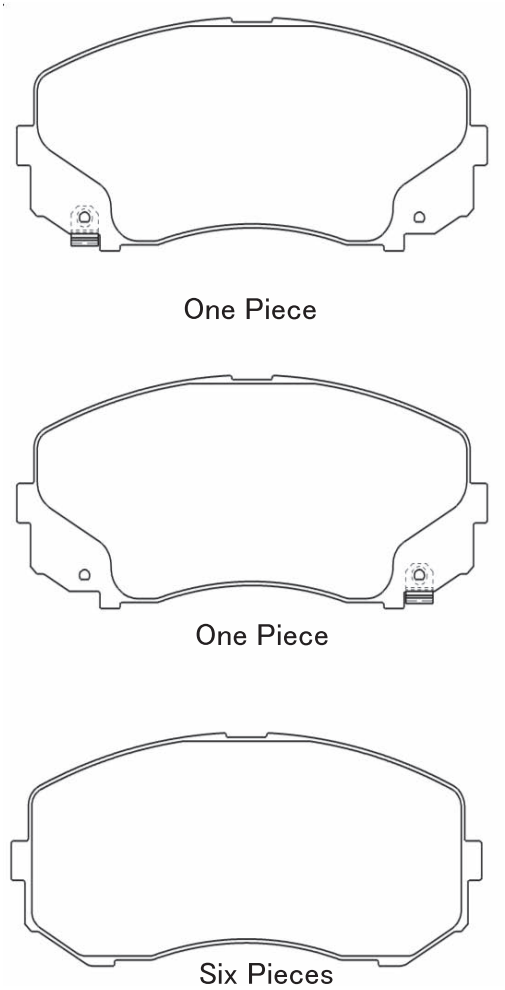

W : 139.2 H : 58.8 T : 19.5

D1N088 キャンター CANTER FGA20,FBA20 10.11～

Front

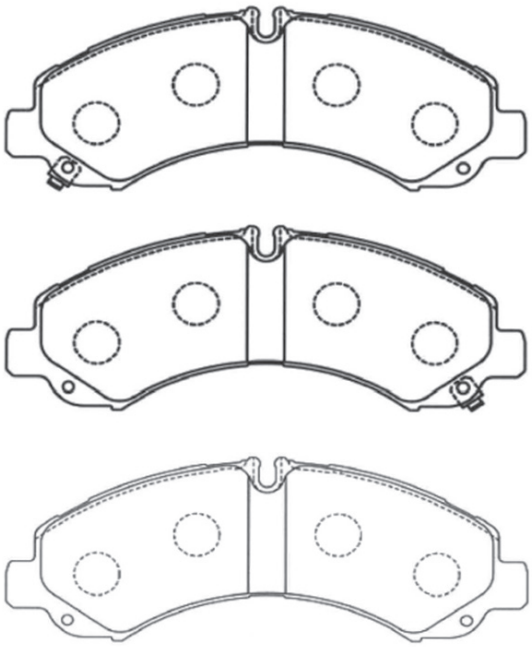

W : 184.2 H : 71.0 T : 19.5

D1N089 キャンター CANTER FGA20,FEB20,FEA20 10.11～

Rear

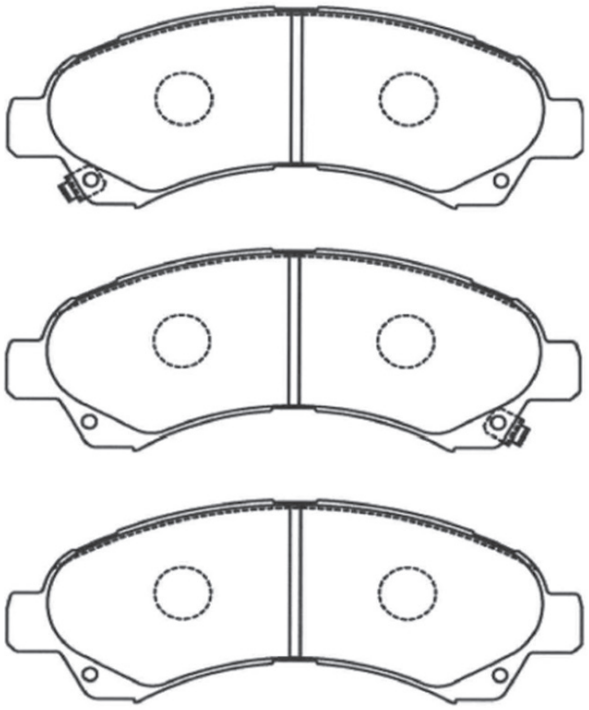

W : 163.6 H : 62.0 T : 19.5

D2N012 GTO Z15A,16A 92.10～

Rear

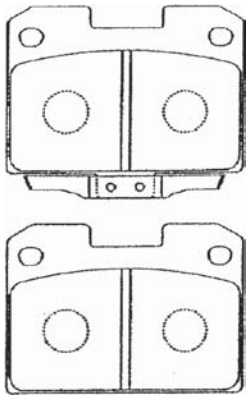

W : 81.3 H : 60.0 T : 16.0

D2N022 チャレンジャー CHALLENGER K94W,96W,99W 96.05～

Rear K97WG,99WG 96.05～

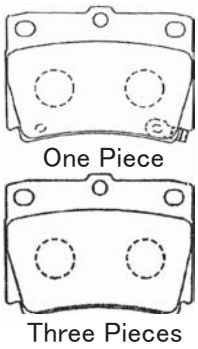

W : 78.8 H : 60.9 T : 15.0

D2N028 ミラージュ,ランサー MIRAGE,LANCER C53A,63A 87.09～

Rear エクリプス ECLIPSE D27A 90.09～

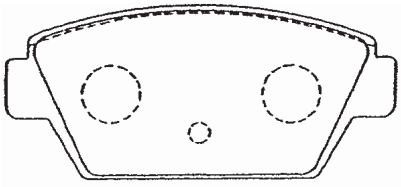

W : 98.3 H : 44.2 T : 14.0

D2N032 ディアマンテ DIAMANTE F11A,12A,13A 90.02～

Rear ギャラン GALANT E54A,64A,74A 92.02～

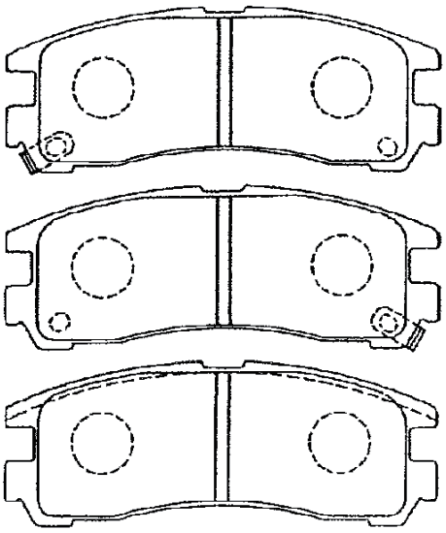

W : 107.8 H : 41.0 T : 15.5

ILLUSTRATION

D2N036 Rear

ｸﾞﾗﾝﾃﾞｨｽ GRANDIS	N86W,96W	99.08～
ﾌﾟﾗｳﾃﾞｨｱ PROUDIA	S32A,33A,43A	00.02～

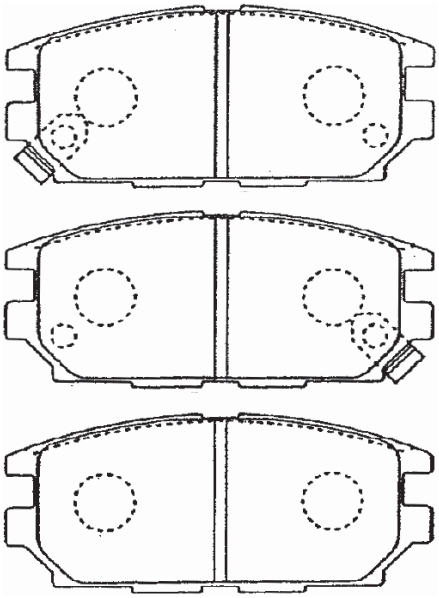

W : 107.9 H : 46.0 T : 15.4

D2N040 Rear

ﾐﾗｰｼﾞｭ,ﾗﾝｻｰ MIRAGE,LANCER	CA1A,2A,CB1A	91.08～
ｺﾙﾄ COLT	Z27A,23A,27W	04.08～

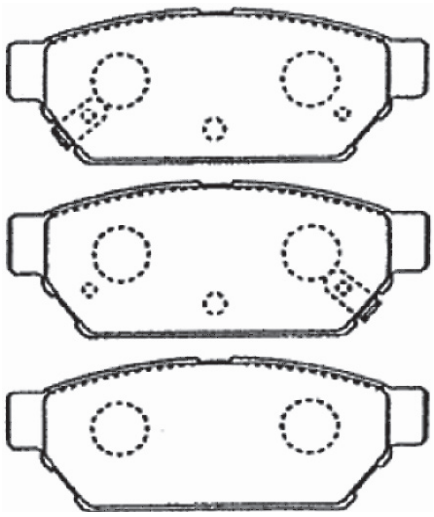

W : 98.8 H : 37.5 T : 14.5

D2N037 Rear

ﾊﾟｼﾞｪﾛ PAJERO	V24V,24C,24W	90.10～
ｽﾍﾟｰｽｷﾞｱ SPACEGEAR	PD4W,8W,PE8W	90.10～

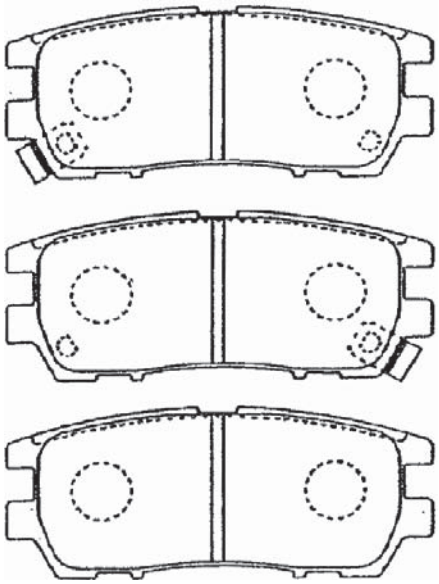

W : 107.9 H : 43.4 T : 14.0

D2N041 Rear

ｴｸﾘﾌｽ,ｽﾊﾟｲﾀﾞｰ ECLIPSE,SPIDER	D22A,27A	89.09～
ﾐﾗｰｼﾞｭ,ﾗﾝｻｰ MIRAGE,LANCER	C53A,63A	90.10～

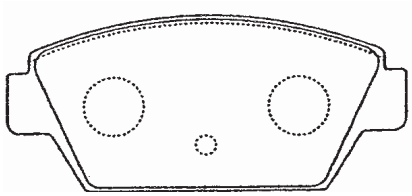

W : 98.7 H : 44.3 T : 14.5

D2N049 Rear

ﾗﾝｻｰﾜｺﾞﾝ LANCER WAGON	CS5W	01.05～
ｴｱﾄﾚｯｸ AIRTREK	CU2W,4W,5W	02.05～

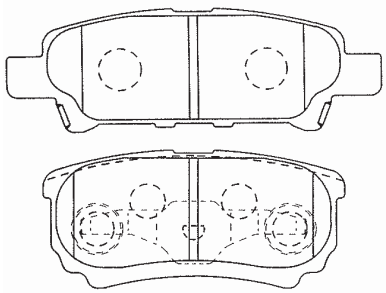

ｲﾝﾅ Inner **W : 105.9 H : 35.7 T : 15.5**

ｱｳﾀ Outer **W : 86.0 H : 40.0 T : 15.5**

D2N074

ｺﾙﾄ COLT	Z27AG	06.05～

Rear

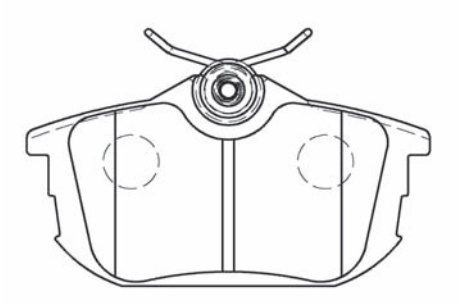

W : 87.0 H : 47.0 T : 16.0

D2N097

ﾊﾟｼﾞｪﾛ PAJERO	V65W,68W,75W	99.06～
ｼｬﾘｵｸﾞﾗﾝﾃﾞｨｽ CHARIOT/GRANDIS	NA4W	03.05～

Rear

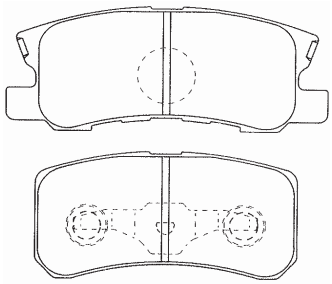

ｲﾝﾅ Inner **W : 111.5 H : 45.0 T : 15.3**

ｱｳﾀ Outer **W : 91.0 H : 45.5 T : 15.3**

E1N003

ﾌｧﾐﾘｱ FAMILIA	BJ3P,5P,BJEP	98.04～
ﾌｧﾐﾘｱﾜｺﾞﾝ FAMILIA WAGON	BJ5W,8W	98.04～

Front

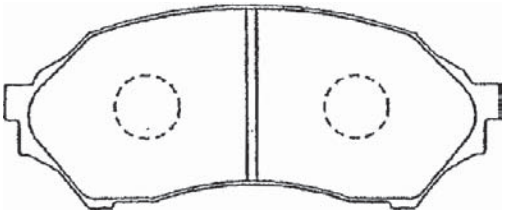

W : 123.0 H : 51.7 T : 15.5

E1N004

MPV	LWEW,LW5W	99.05～
	LWFW,LW3W	02.04～

Front

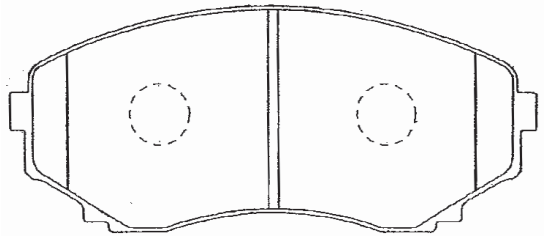

W : 139.2 H : 59.1 T : 16.0

E1N006

RX-8	SE3P	03.04～

Front

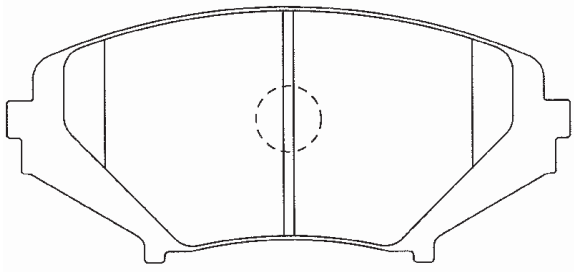

W : 138.0 H : 62.1 T : 16.5

E1N008

ﾎﾞﾝｺﾞ BONGO		SE88M,28M,48V	83.09～
	J100	SS88MF,SSF8F	83.09～

Front

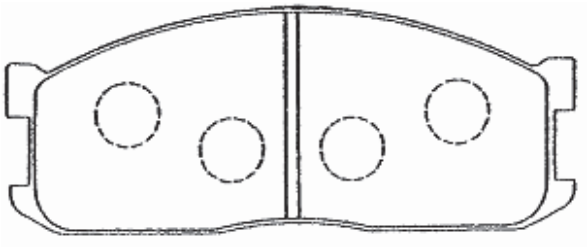

W : 134.6 H : 77.6 T : 17.0

E1N009

ﾎﾞﾝｺﾞ BONGO		SS88M,SS28M	87.09～
ﾎﾞﾝｺﾞﾌﾞﾛｰﾆｲ BONGO BRAWNY		SR89V,SRE9W	87.09～

Front

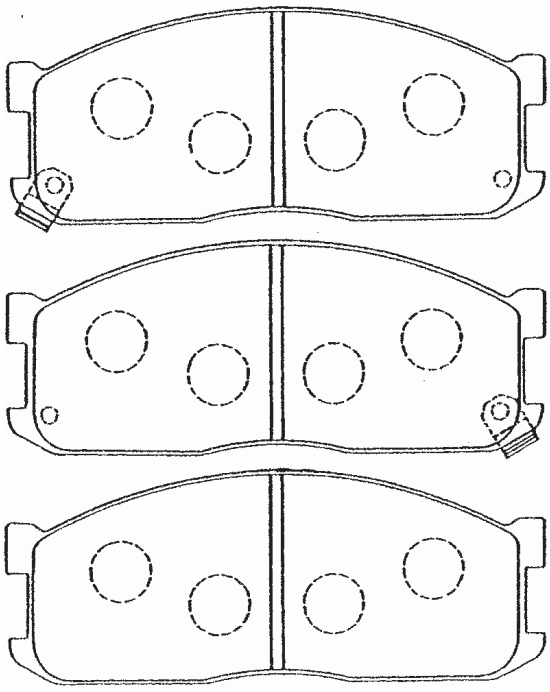

W : 133.0 H : 52.0 T : 15.5

ILLUSTRATION

E1N011 RX-7 FC3S 85.09～
Front (C/#111985～)

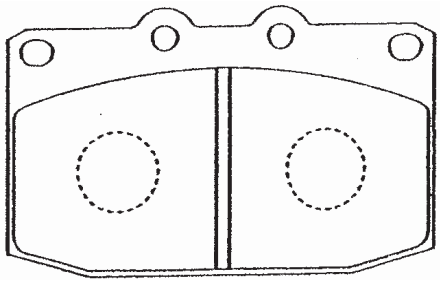

W : 107.1 H : 67.4 T : 14.7

E1N014 ファミリア FAMILIA BG3P,5P,6P 89.01～
Front デミオ DEMIO DW3W,5W 96.07～

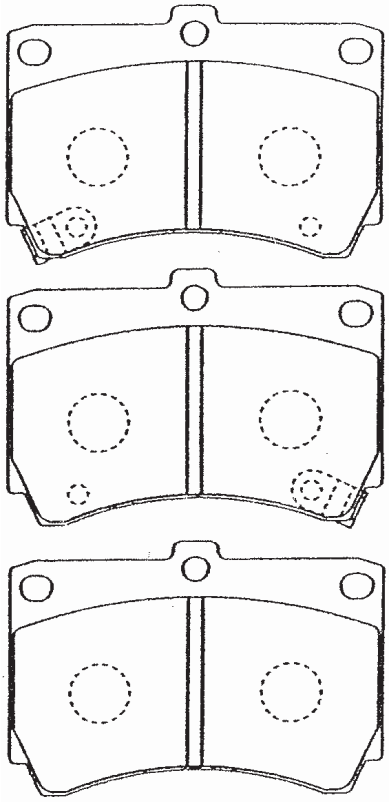

W : 91.8 H : 64.0 T : 15.0

E1N015 ユーノスロードスター EUNOSROADSTER NA6CE 89.07～
Front

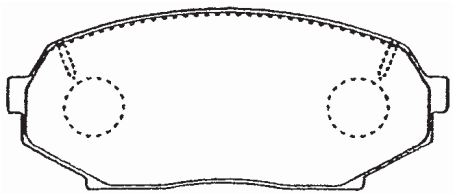

W : 110.1 H : 46.0 T : 14.5

E1N016 ファミリア FAMILIA BG8P,BG8S 89.01～
Front ランティス LANTIS CBA8P 93.06～

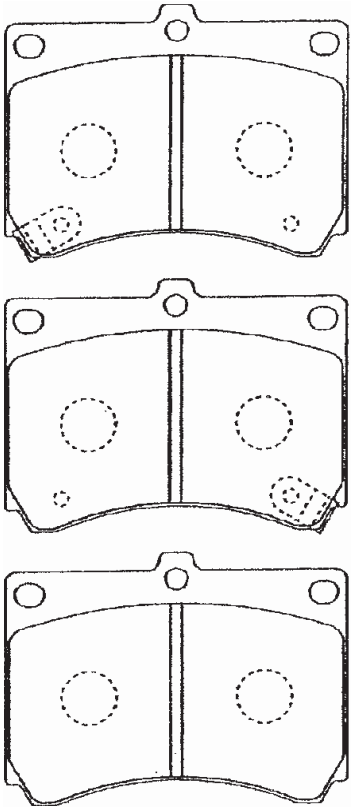

W : 91.8 H : 71.0 T : 15.0

E1N018 MPV LVEW 89.11～
Front

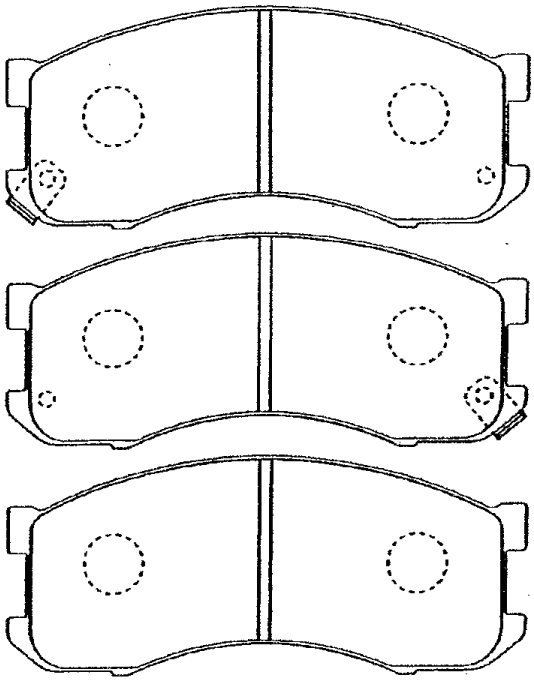

W : 133.0 H : 56.0 T : 15.5

E1N019 RX-7 FD3S 91.10～

Front

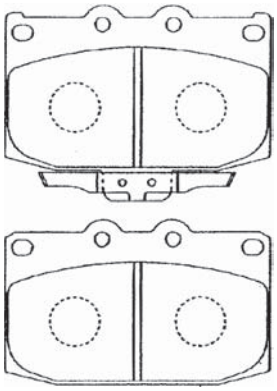

W : 107.1 H : 67.4 T : 14.8

E1N021 ﾎﾞﾝｺﾞﾌﾚﾝﾃﾞｨ BONGO FRIENDEE SGEW,5W,SGLR 95.05～

Front ﾃﾞﾘｶ DELICA SKE6V,SK56M 99.06～

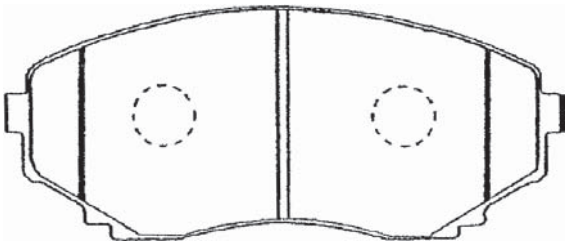

W : 139.2 H : 60.1 T : 16.0

E1N022 ﾕｰﾉｽﾛｰﾄﾞｽﾀｰ EUNOSROADSTER NA8C,NB6C,8C 93.08～

Front

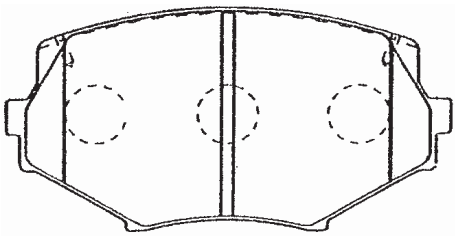

W : 110.1 H : 57.0 T : 13.0

E1N026 ﾌｧﾐﾘｱS-ﾜｺﾞﾝ FAMILIA S-WAGON BJ5W,8W,BJFW 98.05～

Front ﾚｰｻﾞｰﾘﾃﾞｨｱ LASER RIDEA BJ5PF,8WF 98.11～

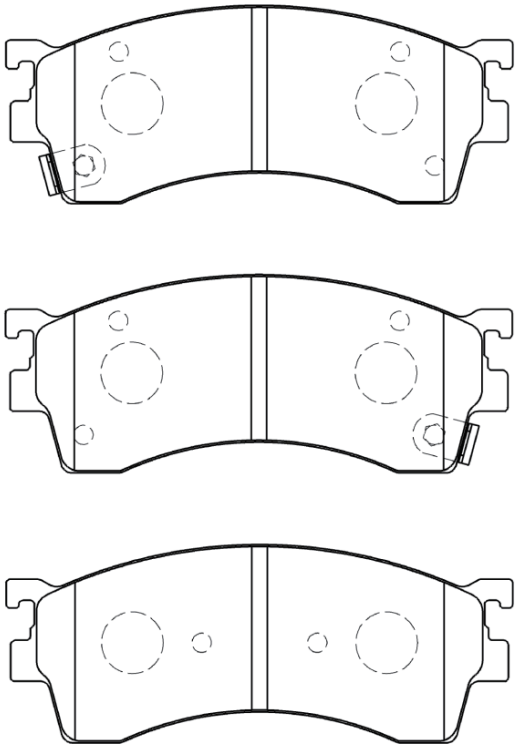

ｲﾝﾅ Inner **W : 131.5 H : 51.5 T : 15.5**

ｱｳﾀ Outer **W : 131.5 H : 51.5 T : 14.5**

E1N035 ｶﾍﾟﾗｶｰｺﾞ CAPELLA WAGON GD8Y,GV6V,FV 87.07～

Front ﾕｰﾉｽ300 EUNOS300 MA8P,8PE,EP 88.10～

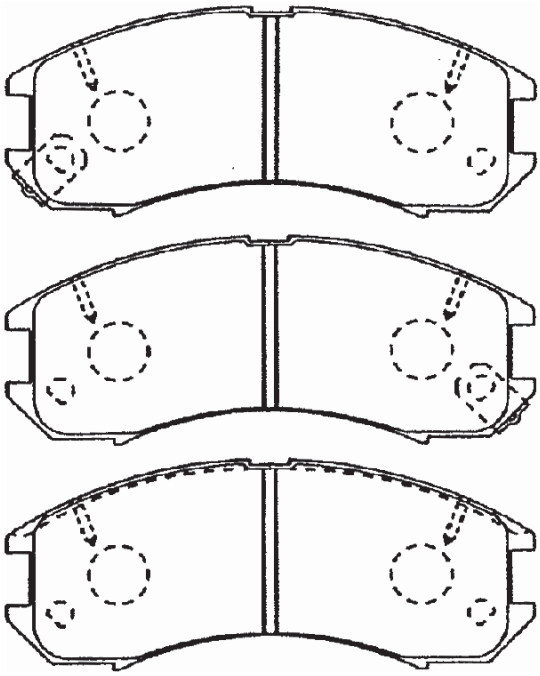

ｲﾝﾅ Inner **W : 129.8 H : 52.5 T : 16.0**

ｱｳﾀ Outer **W : 129.8 H : 52.5 T : 15.0**

ILLUSTRATION

E1N038

Front	ユーノス800 EUNOS800	TA3A,3P,3Y,3Z	93.08～
	ミレーニア MILLENIA	TAFP	98.06～

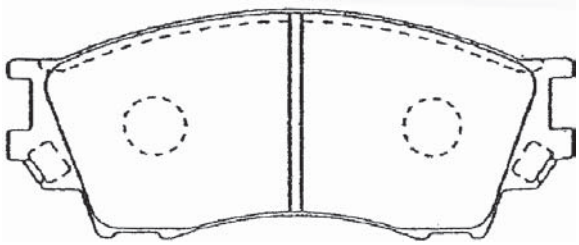

W : 142.0 H : 59.8 T : 15.0

E1N054

Front	ロードスター ROADSTER	NCEC	05.08～

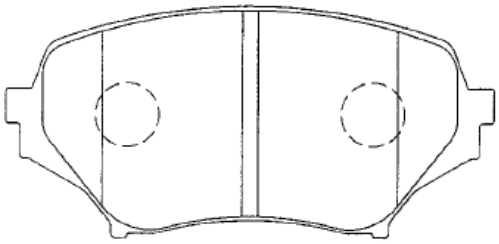

W : 123.0 H : 58.3 T : 14.5

E1N042

Front	カペラカーゴワゴン CAPELLA WAGON	GWER,GWFW	97.10～
	テルスターワゴン TELSTER WAGON	GWERF,GWFWF	97.10～

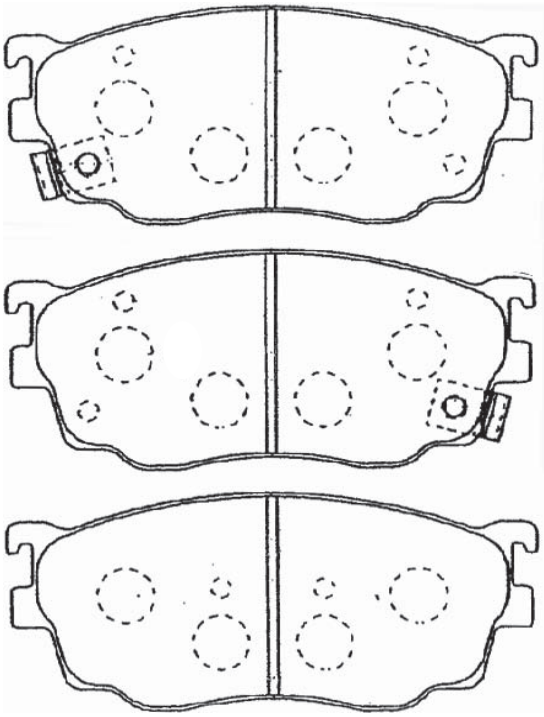

インナ Inner **W : 131.5 H : 56.1 T : 16.0**

アウタ Outer **W : 131.5 H : 56.1 T : 15.0**

E1N053

Front	MPV	LY3P	06.02～
	CX-7	ER3P	06.12～

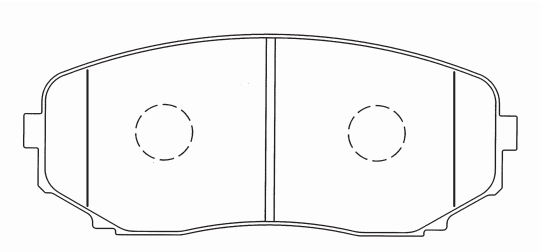

W : 139.0 H : 58.0 T : 17.5

E1N066

Front	トリビュート TRIBUTE	EPEW,EPFW	00.10～
	エスケープ ワゴン ESCAPE WAGON	EPEFW,EPFWF	00.11～

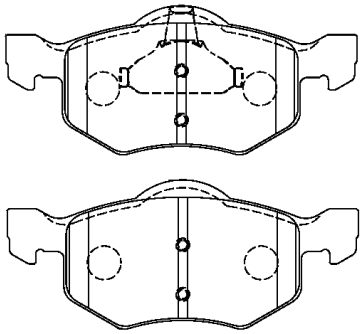

W : 156.4 H : 66.5 T : 18.5

E1N068

Front	アテンザ ATENZA	GG3S(" 18wheel)	05.05～
		GH5FS(25Z)	07.12～

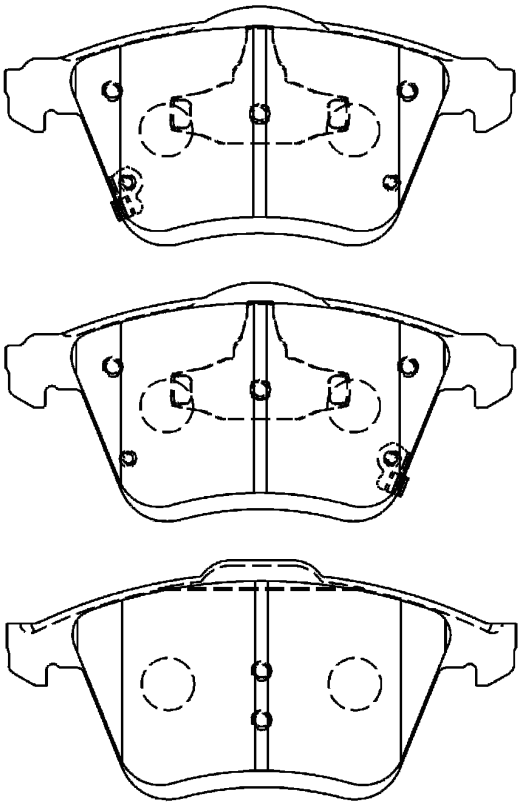

W : 156.4 H : 66.5 T : 18.5

E1N071 アテンザ ATENZA GHEFS,GHEFP 07.12～

Front

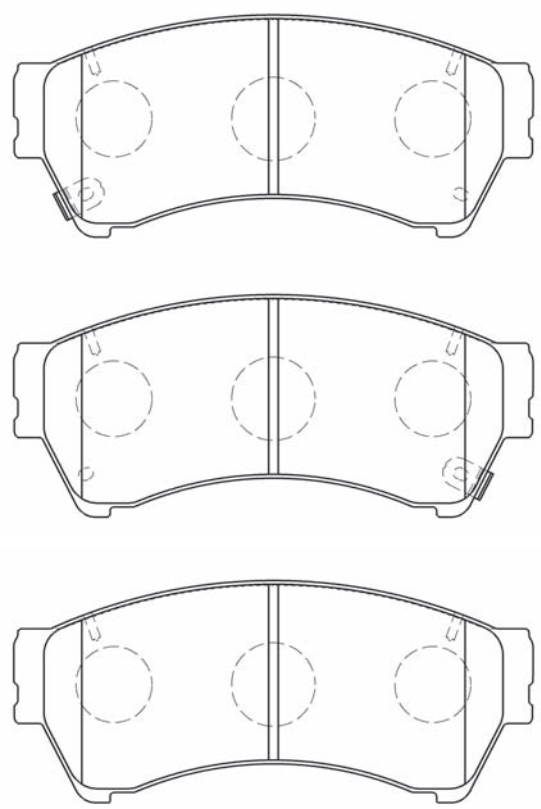

W : 136.8 H : 58.8 T : 17.5

E1N080 デミオ DEMIO DE3AS,DE3FS 07.05～

Front

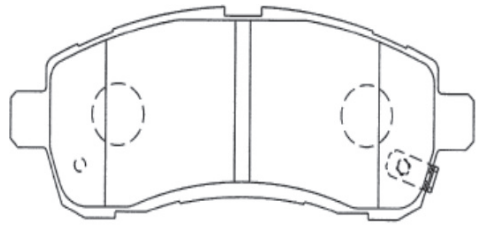

One Piece

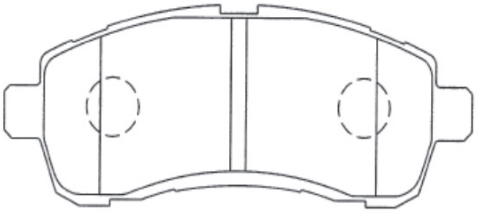

Three Pieces

W : 125.6 H : 47.9 T : 15.0

E1N085 CX-5 KE2FW 12.01～

Front

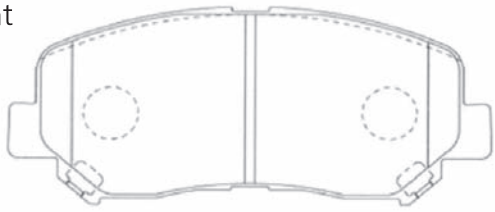

W : 142.0 H 61.0 T : 15.5

E1N107 デミオ DEMIO DJ3AS 14.09～

Front

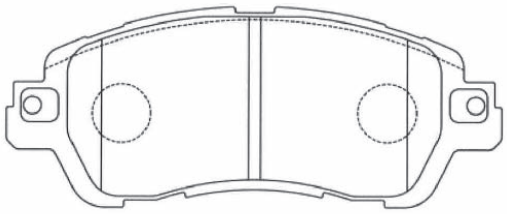

W : 125.7 H 51.5 T : 15.0

E1N108 アクセラ AXELA BMEFS,BM2FSBM5AS,BM5AP 13.09～

Front CX-3 DK5AW,DK5FW 14.12～

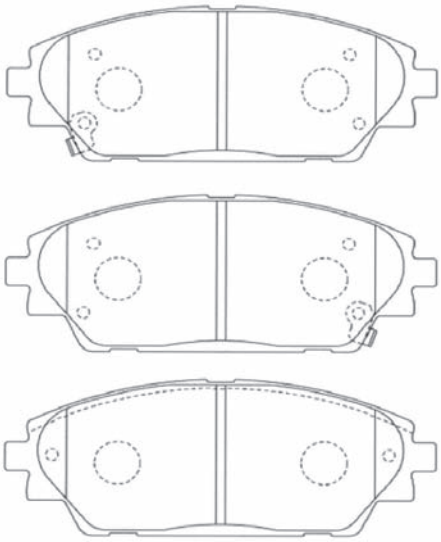

W : 142.0 H : 55.7 T : 15.5

E2N029 ランティス LANTIS CBA8P,EP 93.06～

Rear ファミリア FAMILIA BHALS,LP,5P,5S 94.03～

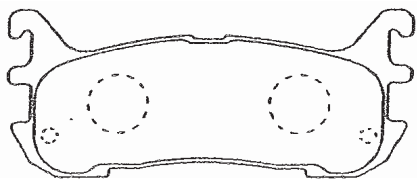

W : 102.0 H : 42.9 T : 12.6

ILLUSTRATION

E2N030 ユーノスロードスター EUNOSROADSTER NA8C,NB6C,8C 97.12～

Rear

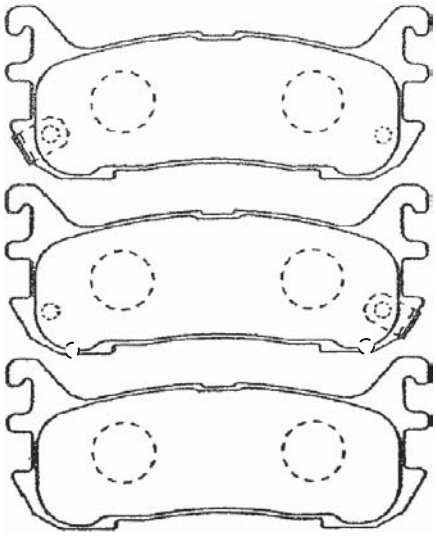

W : 102.0 H : 42.9 T : 12.6

E2N043 ファミリアS-ワゴン FAMILIA S-WAGON BJFW (2WD) 99.06～

Rear

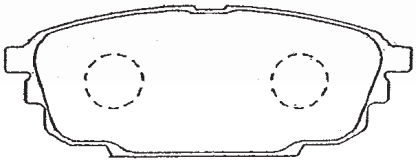

W : 100.7 H : 39.0 T : 13.0

E2N048 MPV LW3W,LWFW 02.04～

Rear

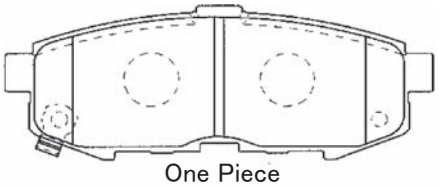

One Piece

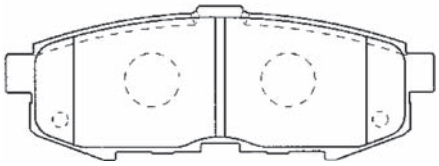

Three Pieces

W : 110.5 H : 41.0 T : 16.0

E2N032 シャレード CHARADE G200S,201,203 93.01～

ミラ MILA L502S 94.08～

Rear

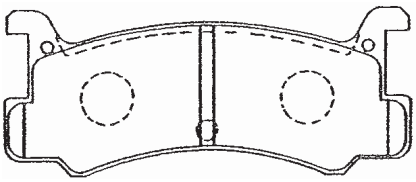

W : 101.6 H : 41.7 T : 12.0

E2N065 アクセラ AXELA BKEP,BK5P 03.09～

プレマシー PREMACY CREW,CR3W 05.02～

Rear

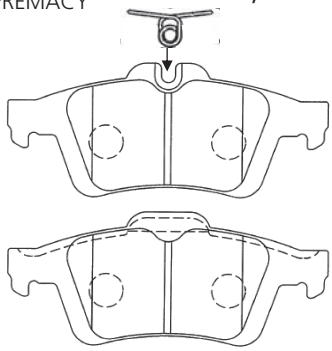

W : 123.2 H : 51.8 T : 15.5

E2N033 ファミリア FAMILIA BG8Z,BJ5P 90.11～

ファミリアS-ワゴン FAMILIA S-WAGON BJ5W,8W,FW 98.05～

Rear

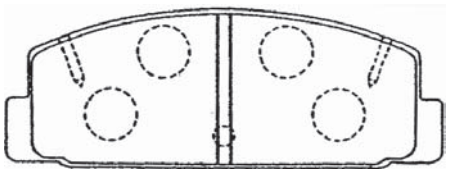

W : 107.8 H : 39.5 T : 13.0

E2N067 アテンザ ATENZA GG3S(18inch) 05.05～

GH5FS(25Z) 07.12～

Rear

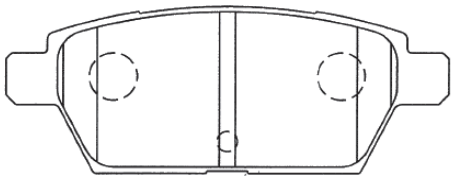

W : 110.5 H : 42.2 T : 14.5

E2N086 RVR GA4W 12.10～17.05

Rear アウトランダー OUTLANDER GF7W 12.08～

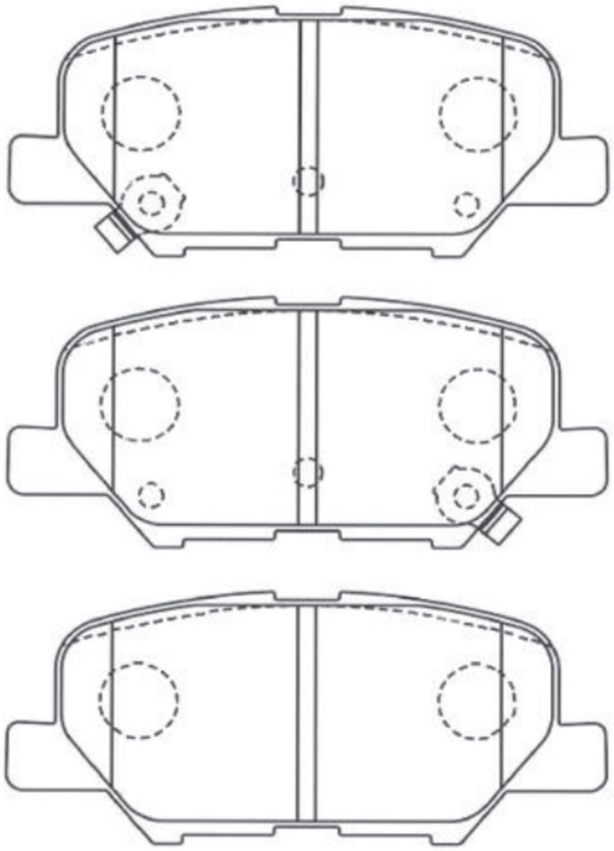

W : 101.4 H : 44.4 T :14.0

E2N088 CX-5 KE2FW 12.01～

Rear

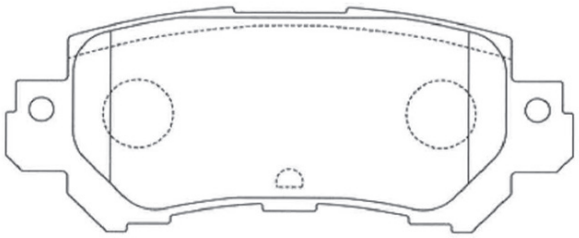

W : 104.7 H 43.3 T : 14.0

E2N109 アクセラ AXELA BMEFS,BM2FS,BM5AS,BM5AP 13.09～

Rear

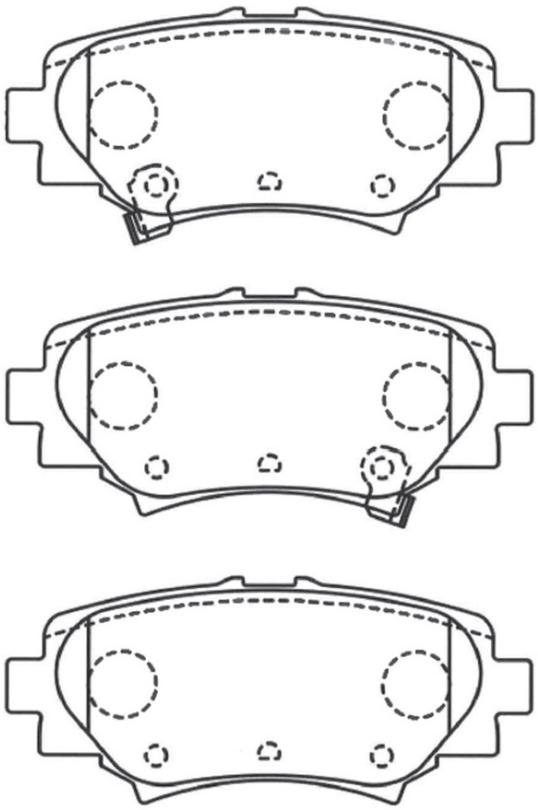

W : 101.5 H : T : 13.5

ILLUSTRATION

F1N003 Front

サンバー SAMBAR	KV3,4,KS3,4	90.03～
ドミンゴ DOMINGO	FA7,8	94.06～

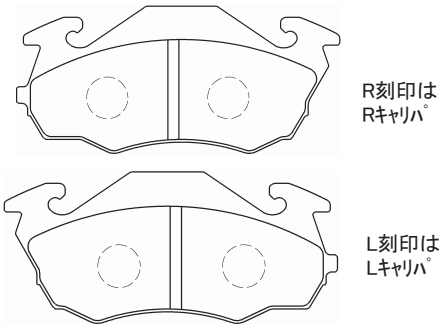

W : 118.0 H : 53.6 T : 15.0

F1N005 Front

プレオ PLEO	RA1,2,RV1,2	98.10～

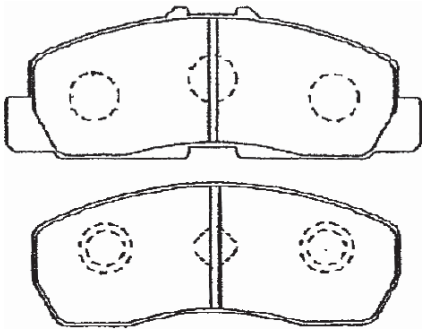

インナ Inner **W : 112.4 H : 42.0 T : 14.0**

アウタ Outer **W : 99.1 H : 40.0 T : 14.0**

F1N008 Front

レオーネバン LEONE VAN	AP2,3,9	84.06～
レオーネ LEONE	AA2,3	84.07～

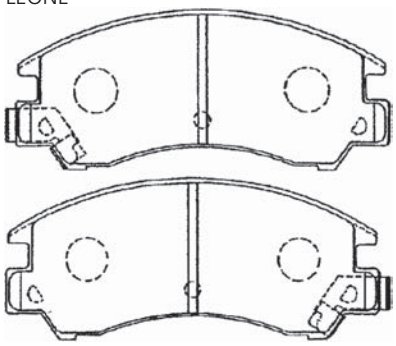

W : 127.2 H : 54.8 T : 17.0

F1N011 Front

レガシィ LEGACY	BC4,5,BF5,7,BD5	89.02～
インプレッサ IMPREZA	GC8,GF8	92.11～

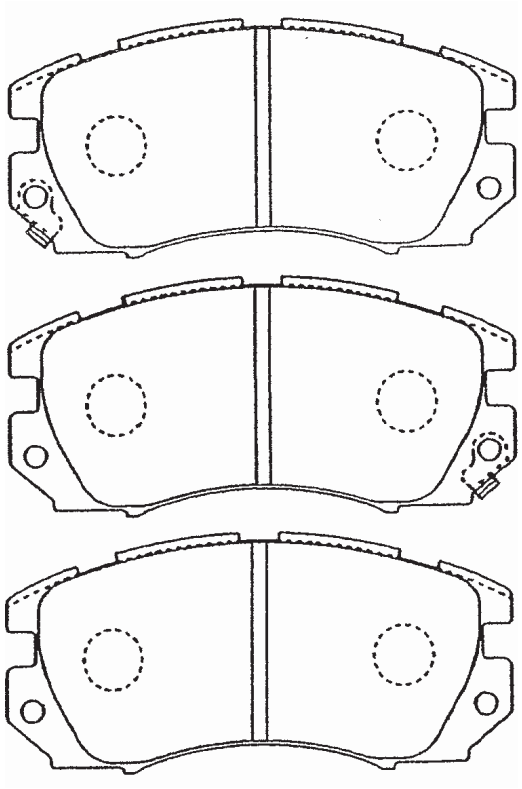

W : 127.8 H : 59.0 T : 17.0

F1N013 Front

レガシィ LEGACY	BD5,9,BE5,BG5	96.06～
フォレスター FORESTER	SF5,9	97.02～

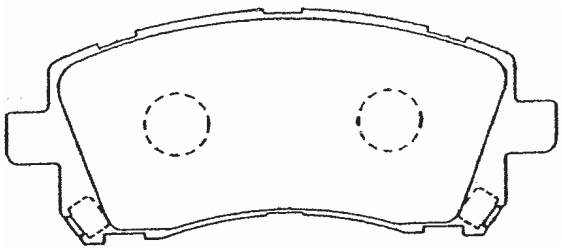

W : 137.8 H : 59.5 T : 17.0

F1N014 Front

レガシィ LEGACY	BD2,3,4,5,BG2,3	96.06～
インプレッサ IMPREZA	GC1,2,8,GF1,2,5	96.09～

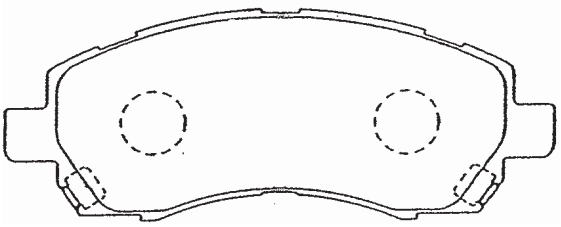

W : 137.8 H : 53.9 T : 17.0

F1N018

Front

レガシィ LEGACY	GD9	02.11～
インプレッサ IMPREZA	BL5,BP5	03.05～

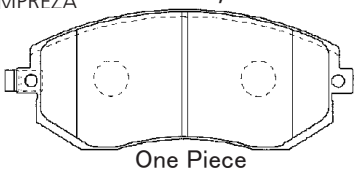

One Piece

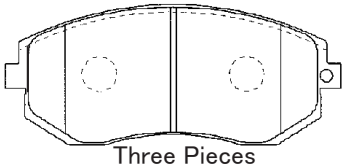

Three Pieces

W : 137.0 H : 56.8 T : 17.0

F1N019

Front

レガシィ LEGACY	BLE,BL5,BPE	03.05～

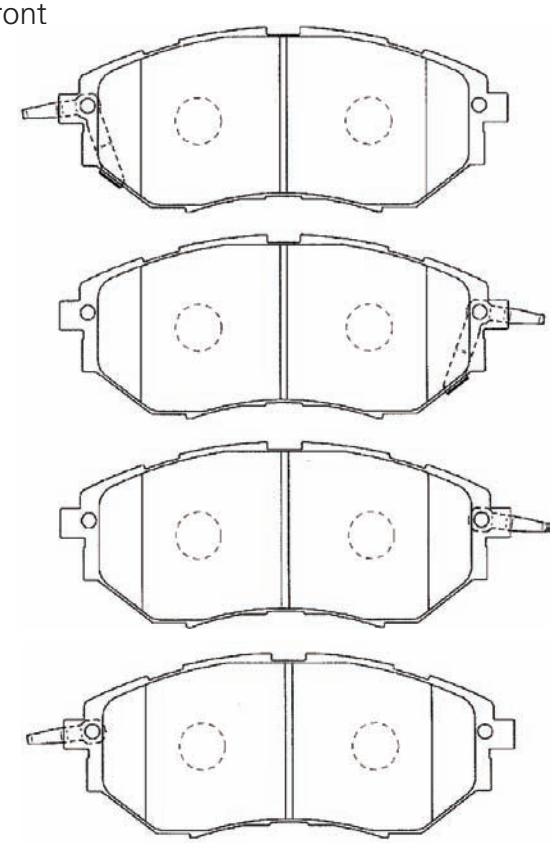

W : 157.0 H : 63.4 T : 17.0

F1N020

Front

インプレッサ IMPREZZA	GD2,3,GG2,3	02.11～
レガシィ LWGASY	BH5	02.04～

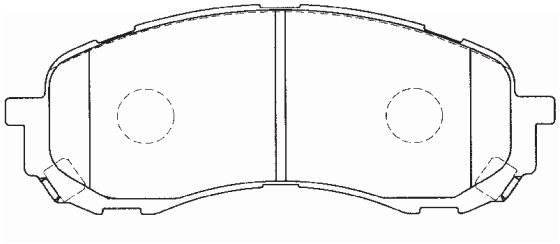

W : 137.0 H : 53.9 T : 17.0

F1N042

Front

インプレッサ IMPREZZA	GDA,GD9,GGA	00.08～
レガシィ LEGACY	BHE,BH9,BE5	02.01～

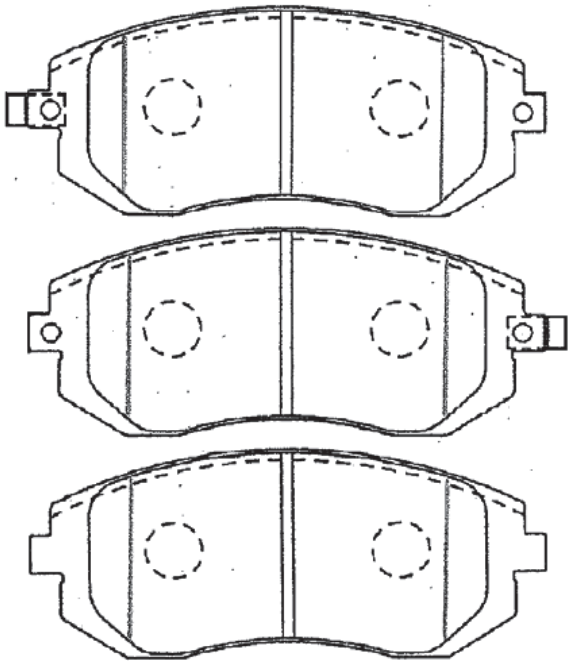

W : 137.0 H : 56.8 T : 17.0

F2N012

Rear

レガシィ LEGACY	BC3,4,5,BD4,5	89.02～
インプレッサ IMPREZZA	GC1,2,4,6,8,GF3	92.11～

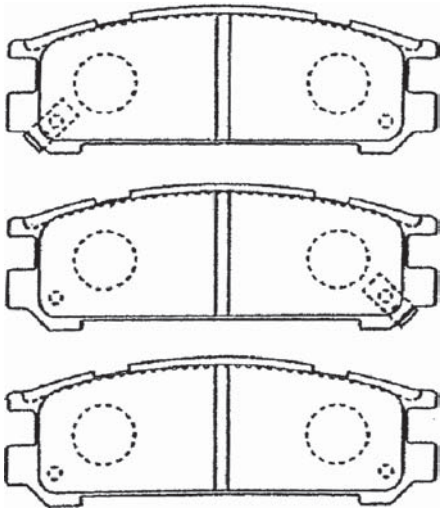

W : 107.8 H : 38.6 T : 15.0

ILLUSTRATION

F2N015 Rear

フォレスター FORESTER	SF5,9	97.02～
インプレッサ IMPREZA	GC8,GF8,GDA	98.09～

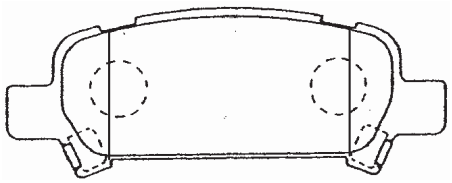

W : 108.4 H : 42.0 T : 14.0

F2N016 Rear

インプレッサ IMPREZA	GD9	02.11～
フォレスター FORESTER	SG5	03.02～

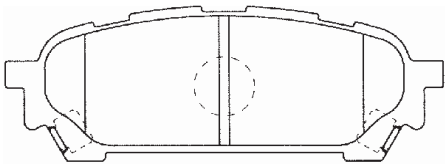

W : 108.5 H : 39.5 T : 14.0

F2N022 Rear

レガシィ LEGACY	BPE,BL5,BP5,9	03.05～

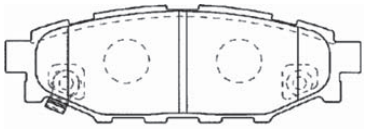

One Piece

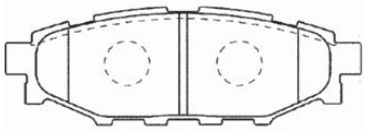

Three Pieces

W : 110.5 H : 37.5 T : 14.0

F2N037 Rear

インプレッサ IMPREZA	GRF,GVF	09.02～
レガシィ LEGACY	BM9	09.06～

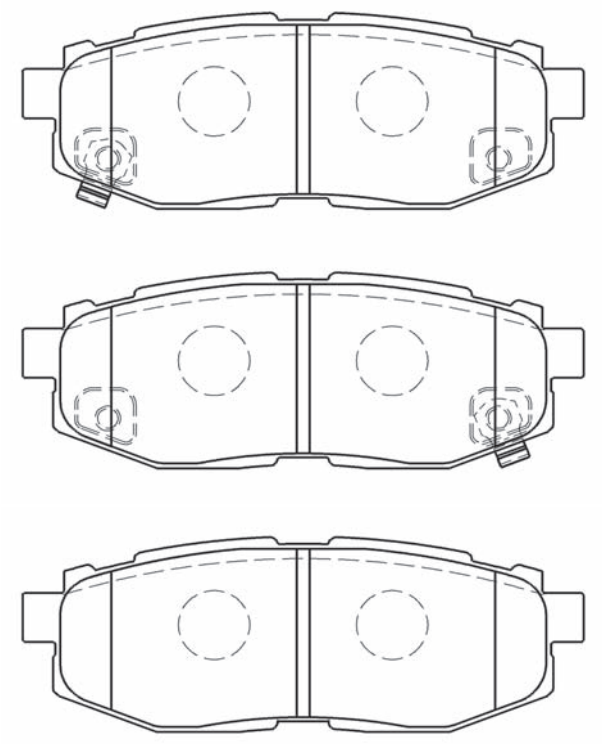

W : 110.3 H : 38.2 T : 16.0

F2N044 Rear

レヴォーグ LEVORG

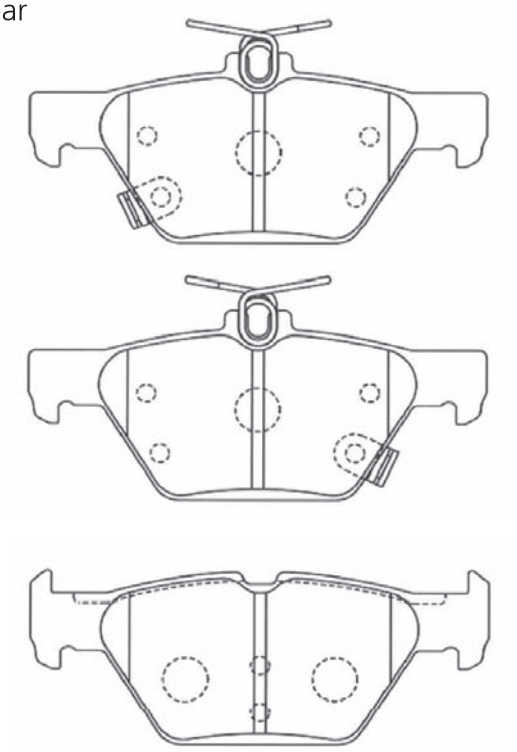

インナー Inner **W : 123.2 H :52.0 T : 13.5**

アウター Outer **W : 123.2 H :47.8 T : 13.5**

G1N005

Front	テリオス TERIOS	J100G,102G,122G	97.03～
	テリオスキッド TERIOS KID	J111G	98.10～

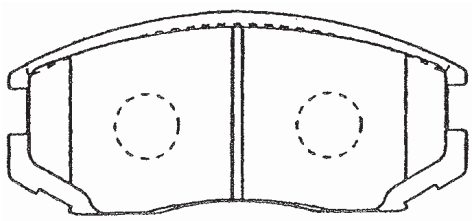

W : 114.0 H : 49.8 T : 15.0

G1N006

Front	エブリイ プラス EVERY PLUS	DA32W	99.06～
	スイフト SWIFT	HT51S,81S	00.02～

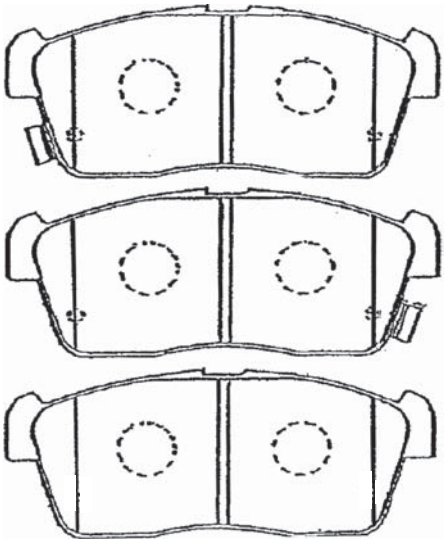

W : 108.5 H : 45.4 T : 15.0

G1N011

Front	ハイゼット HIJET	S100V,100W,200	94.01～
	スパーキー SPARKY	S221,231	00.09～

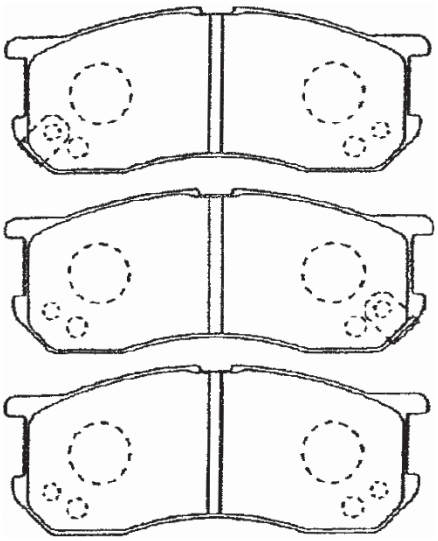

W : 106.1 H : 41.5 T : 15.0

G1N015

Front	ミラ MIRA	L200S,210S,500S	91.05～
	ムーブ MOVE	L600S,602S,610S	96.04～

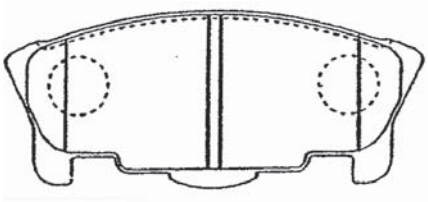

W : 104.6 H : 45.0 T : 13.5

G1N017

Front	パイザー PYZAR	G303G,313G	96.08～
		G301G,311G	97.09～

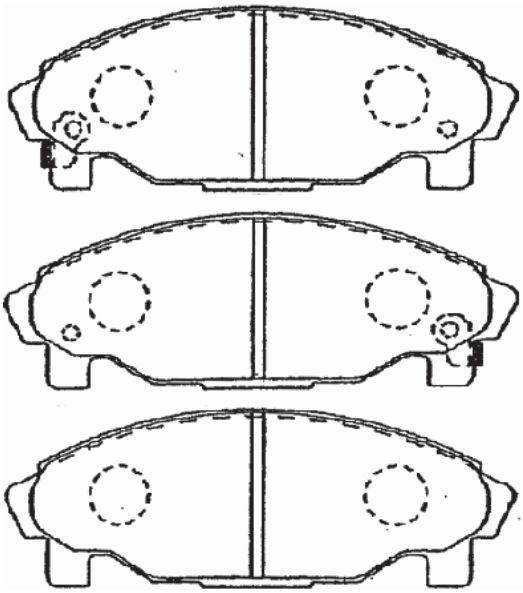

W : 127.6 H : 45.3 T : 15.0

G1N018

Front	デュエット DUET	M100A,110A	98.09～
	YRV	M200G,211G	00.08～

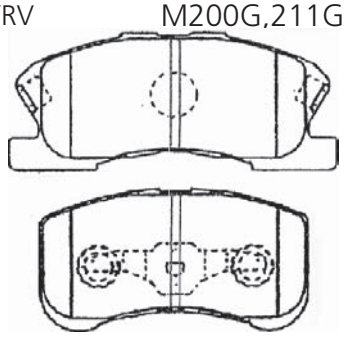

インナ Inner **W : 115.4 H : 49.7 T : 15.5**

アウタ Outer **W : 95.0 H : 49.6 T : 15.5**

ILLUSTRATION

G1N019

Front

オプティ OPTI	L300S	96.04～
ムーブ MOVE	L600S,610S	96.04～

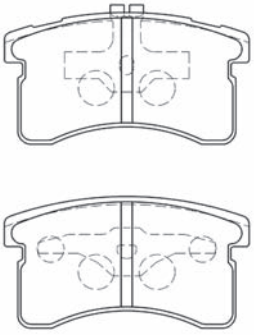

W : 88.4 H : 49.0 T : 13.5

H1N006

Front

スクラム SCRUM	DG41V,DK51B	89.05～
キャリイ,エブリイ CARRY,EVERY	DA41,DE51V	89.05～

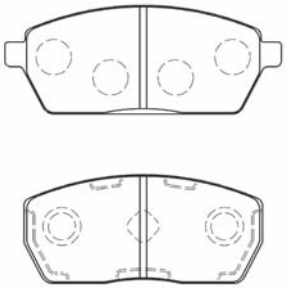

インナ Inner **W : 102.0 H : 40.0 T : 15.0**

アウタ Outer **W : 88.0 H : 40.0 T : 15.0**

G2N010

Rear

AZ-3,プレッソ PRESSO	EC5SA,8SE	91.06～
ユーノス100 EUNOS100	EG8PE	98.10～

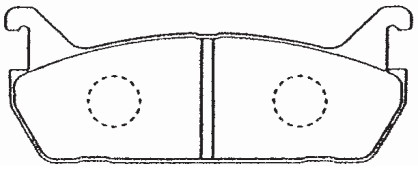

W : 102.0 H : 39.0 T : 12.5

H1N008

Front

ワゴンR WAGON R	CT21S,CV21S	95.10～
アルト ALTO	HA11S,HB11S	94.11～

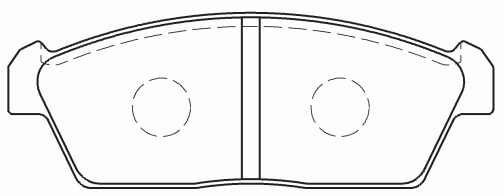

W : 108.7 H : 38.8 T : 15.0

H1N001

Front

エスクード ESCUDO	TA11W,31W	94.12～
プロシード,レバンテ PROCEED,LEVANTE	TF11W,31W	95.01～

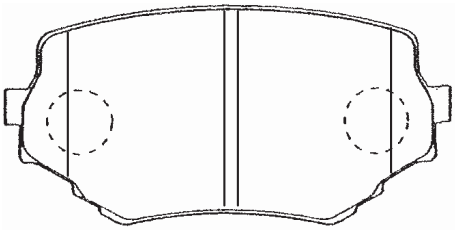

W : 110.2 H : 51.8 T : 15.0

H1N009

Front

ワゴンR WAGON R	MC11S,21S	98.10～
Kei	HN11S,22S	98.10～

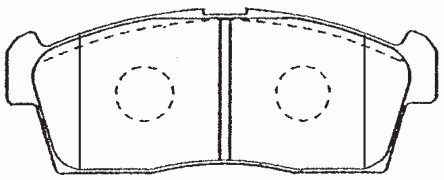

W : 108.5 H : 41.9 T : 15.0

H1N005

Front

AZ-1,AZワゴン AZ WAGON	PG6SA,CY21S	92.08～
ワゴンR WAGON R	CT21S,CV21S	93.09～

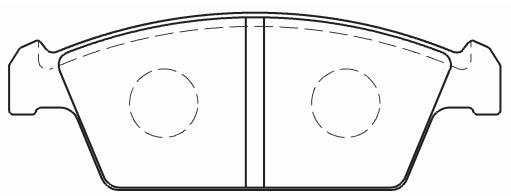

W : 108.6 H : 39.1 T : 13.8

H1N011

Front

ジムニーシエラ JIMNY SHIERA	JB31W,32W	93.05～
ジムニーワイド JIMNY WIDE	JB33W,43W	98.01～

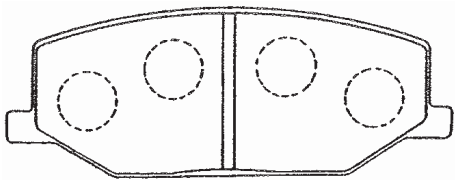

W : 110.4 H : 41.5 T : 15.0

H1N014 キャロル,AZワゴン CAROL,AZ WAGON AA6PA,CY21S 92.07～
Front ワゴンR WAGON R CT21S,CV21S 93.09～

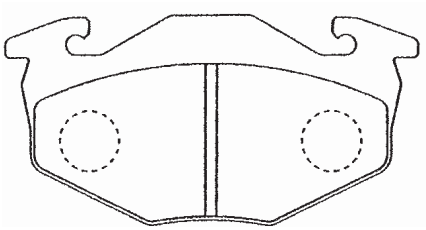

W : 105.0 H : 54.0 T : 15.0

H1N016 カルタスクレセント CULTUS CRESENT GA11S,GB31S 95.01～
Front GC21W,GD31W 96.02～

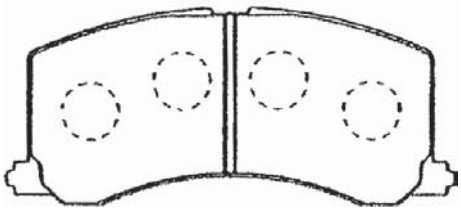

W : 111.4 H : 48.5 T : 15.0

H1N020 ワゴンRワイド WAGON R WIDE MA61S,MB61S 97.02～
Front ワゴンR(+)プラス WAGON R PLUS MA63S 99.05～

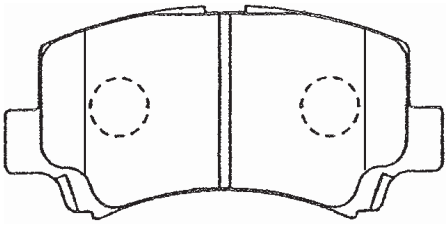

W : 106.4 H : 50.0 T : 15.0

H1N025 スイフト SWIFT ZC11S,21S 05.09～
Front ZC31S,ZD11S

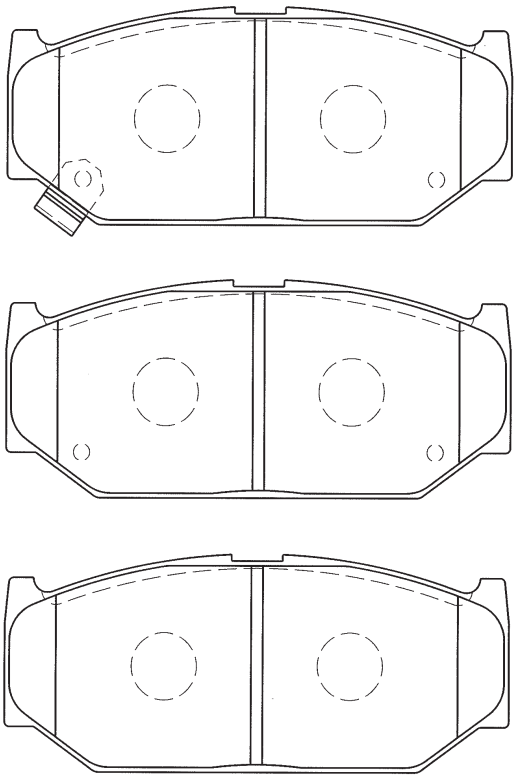

W : 108.4 H : 45.4 T : 15.0

H1N040 エスクード ESCUDO TD54W,94W 05.05～
Front

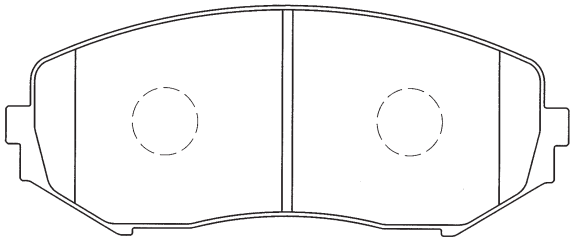

W : 138.1 H : 54.6 T : 16.5

ILLUSTRATION

H1N041 SX4 YA11S,YB11S 07.06～

Front

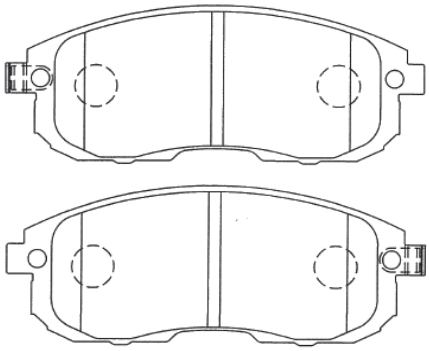

W : 137.0 H : 54.0 T : 16.0

H1N052 アルト、ワゴンR ALTO、WAGON R HA25,MH34S 09.12～

Front

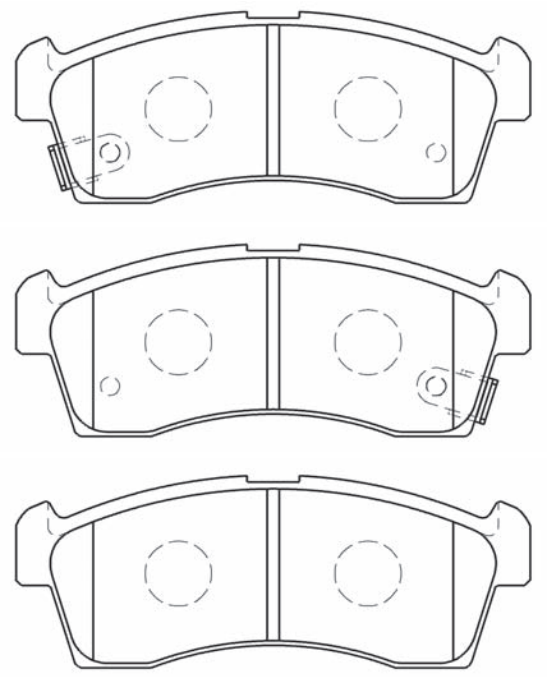

W : 108.5 H : 41.9 T : 14.5

H1N053 キャリイ CARRY DA16 13.09～

Front

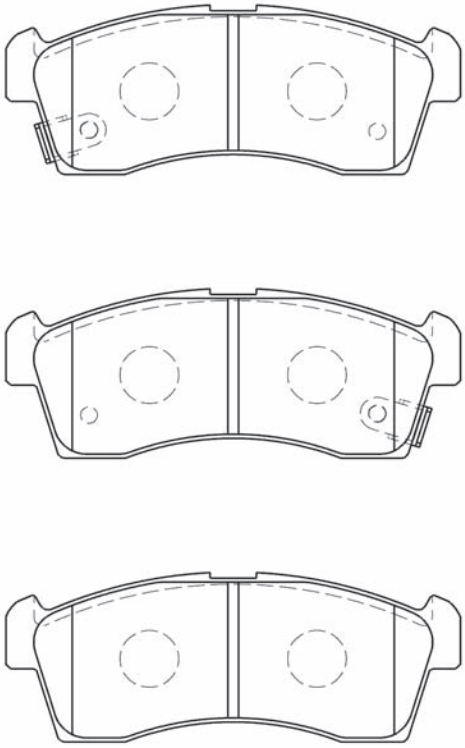

W : 108.5 H : 41.9 T : 14.5

H1N058 エスクード ESCUDE

Front

X-90	TA01R,TA01W	88.05～
	LB11S	95.10～

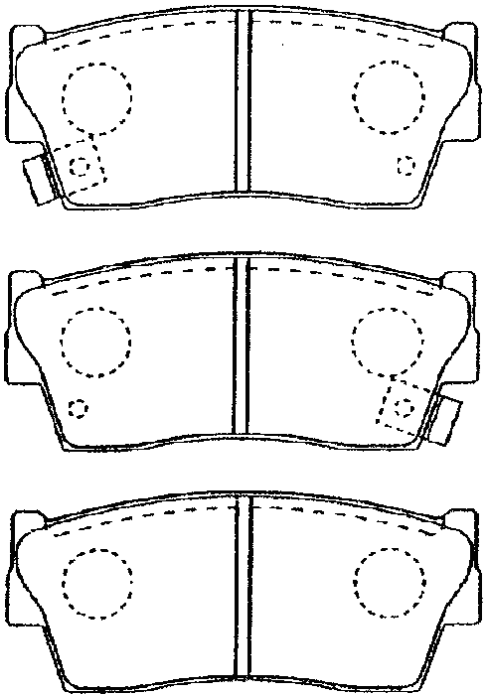

W : 103.4 H : 43.5 T : 15.0

H2N046 スイフト SWIFT

Rear

ZD32S,72S 10.09～

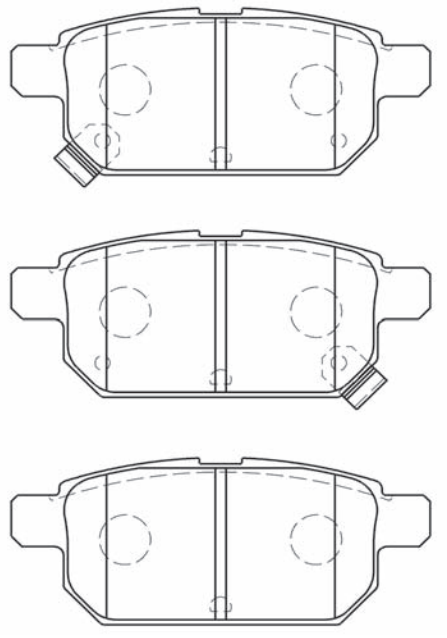

W : 98.5 H : 40.3 T : 14.5

H1N059 エスクード ESCUDE

Front

TD01W,TA02W	90.09～
TA52W,TD52W	97.11～

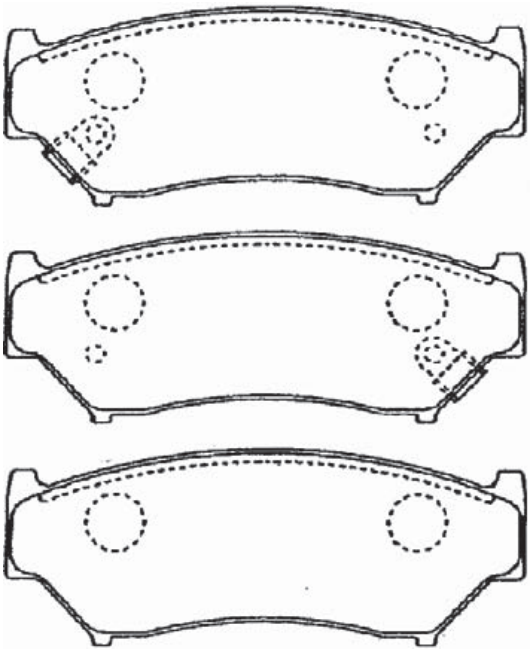

W : 116.5 H : 45.5 T : 15.5

J1N008 ビッグホーン BIG HORN / ビークロス VEHI CROSS

Front

BIG HORN	UBS25,26,69,73	91.12～
VEHI CROSS	UGS25	97.05～

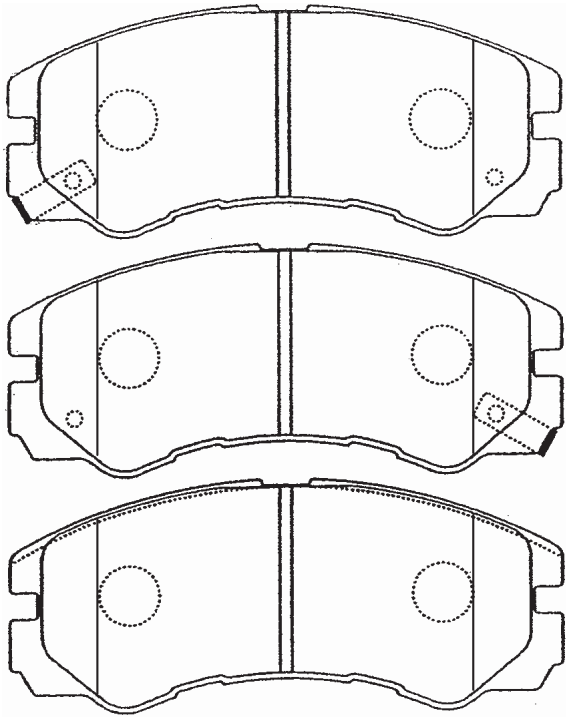

W : 137.8 H : 58.7 T : 16.5

ILLUSTRATION

J1N010

Front

ﾋﾞｯｸﾞﾎｰﾝ BIG HORN	UBS17,55	87.06～
ﾐｭｰ MU	UCS17,55	89.02～

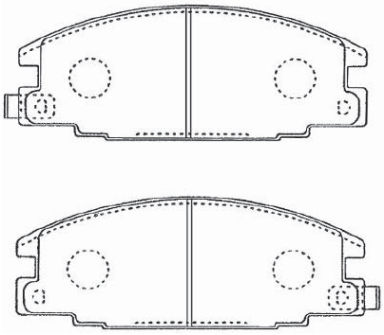

W : 127.0 H : 51.0 T : 16.0

J1N018

Front

ｴﾙﾌ ELF	NKR66,69,71	99.04～
ﾀｲﾀﾝ TITAN	WGSTA,WGEAT	99.04～

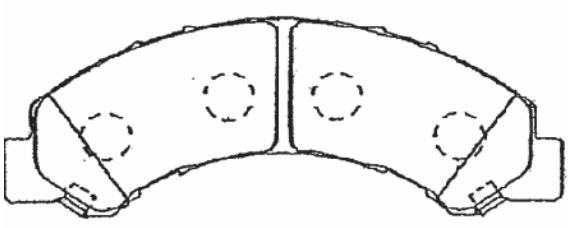

W : 206.4 H : 74.6 T : 20.0

J2N016

Rear

ﾐｭｰ,ｳｨｻﾞｰﾄﾞ MU,WIZARD	UES73,UER25	98.03～

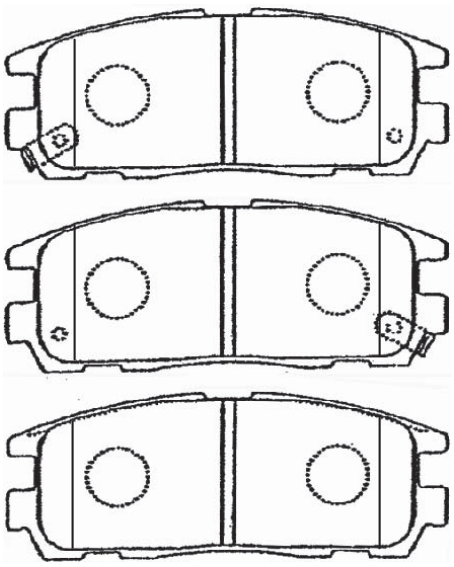

W : 109.6 H : 42.5 T : 14.0

J2N009

Rear

ﾋﾞｯｸﾞﾎｰﾝ BIG HORN	UBS25,26,69,73	91.12～
ﾋﾞｰｸﾛｽ VEHI CROSS	UGS25	97.05～

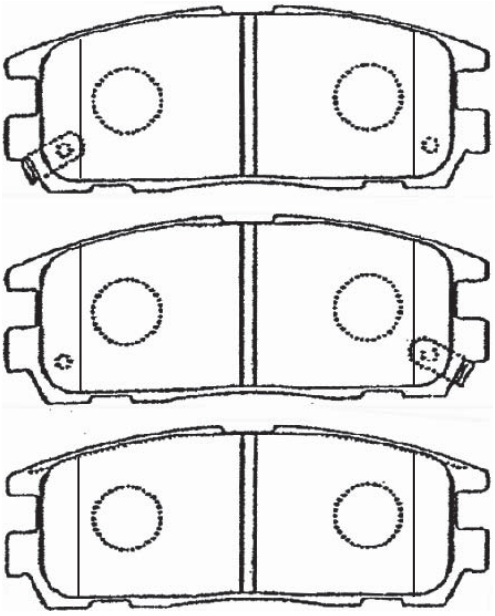

W : 109.6 H :42.5 T : 16.0

SN103P

Front

ミラ MIRA	L700S,710S,710V	98.08～
ハイゼット HIJET	S200C,210C,210P	98.12～

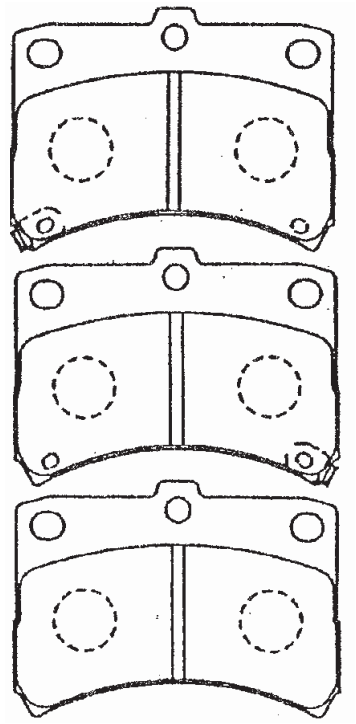

W : 78.9 H : 57.5 T : 14.5

SN116

Front

ボンゴ ブローニィ BONGO BRAWNY	SKE4T,SK54T	99.06 ～
タイタン TITAN	SYE4T,SYF4T	00.09 ～

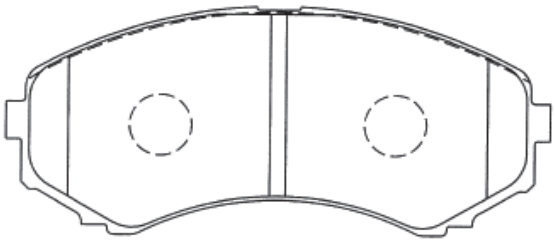

W : 139.0 H : 59.0 T : 16.0

SN118

Front

シビリアン CIVILIAN	ACW41,AVW41	04.10～

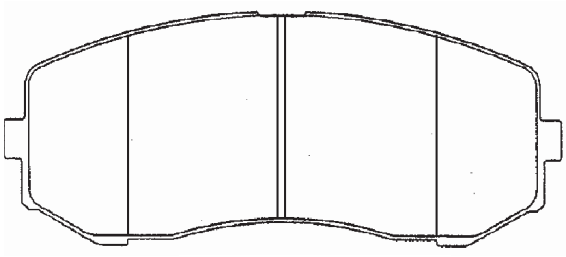

Eight Pieces

W : 139.1 H : 58.8 T : 19.5

SN109P

Front

インプレッサ INPREZZA	GC1,2,8,GF8	96.09～
フォレスター FORESTER	SF5(STI)	00.12～
レガシィ LEGACY	BE5,BH5	01.05～

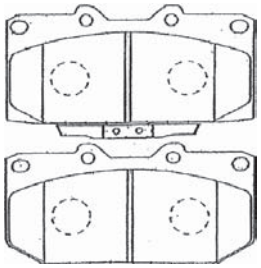

W : 119.3 H : 62.0 T : 14.5

SN110

Front

ラグレイト LAGREAT	RL1	99.06 ～

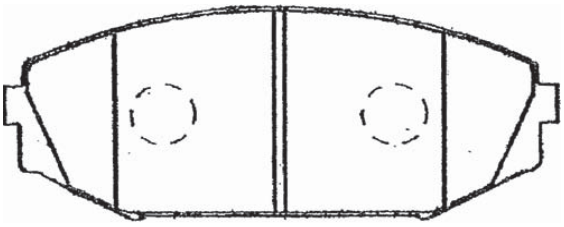

W : 139.2 H : 56.3 T : 17.0

SN124P

Front

ライフ LIFE	JB7,8	03.09～

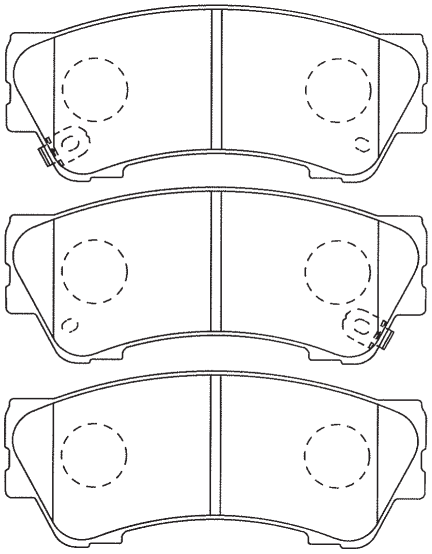

W : 103.8 H : 44.7 T : 14.0

ILLUSTRATION

SN127

Front

コルト COLT	Z27A,27W (Turbo)	04.08～
	Z23W (15"Wheel)	04.08～

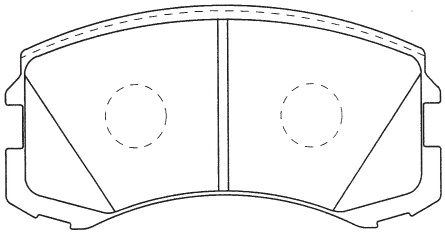

W : 114.0 H : 56.5 T : 15.5

SN130P

Front

シエンタ SIENTA	NCP81G,85G	04.10～
プロボックス PROBOX	NCP58G,59G	04.11～

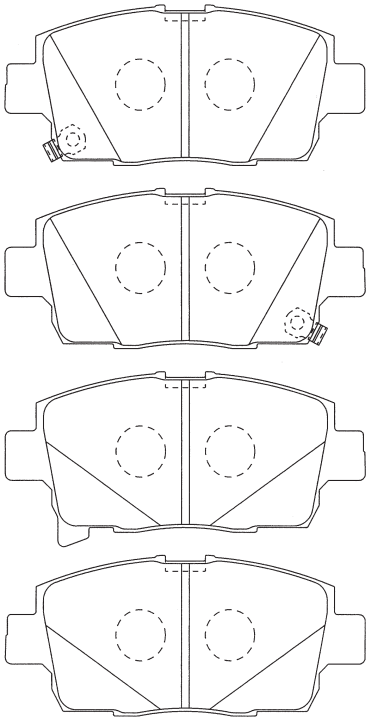

W : 116.5 H : 50.3 T : 16.5

SN137

Front

ダイナ,トヨエース DYNA,TOYOACE	XZU504,508	06.10～

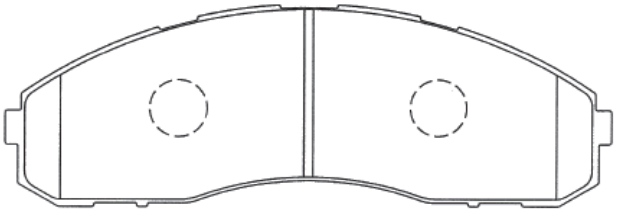

W : 170.0 H : 57.3 T : 18.0

SN145P

Front

ハイゼット HIJET	S320V,330V	04.11～
アトレー ワゴン ATRAI	S320G,330G	05.04～

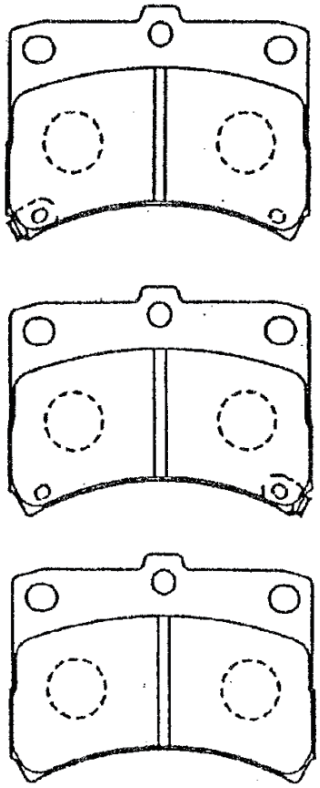

Outer Pad With Shim

W : 78.9 H : 57.5 T : 14.5

SN230

Front

ファーゴ バン FARGO(VAN)	WFR12	85.12～
ファーゴ ワゴン FARGO(WAGON)	WFR51,WFS51	85.12～
ファーゴ トラック FARGO(TRUCK)	NFR12,62,NFS62	88.09～

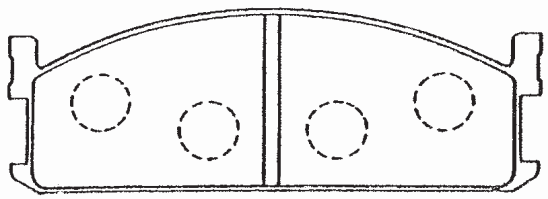

W : 133.0 H : 47.0 T : 15.5

SN233

Front

ハイゼット HIJET	S80P,80V,82W	86.05～
ミラセダン MIRA(SEDAN)	L200S,210S,500S	90.03～

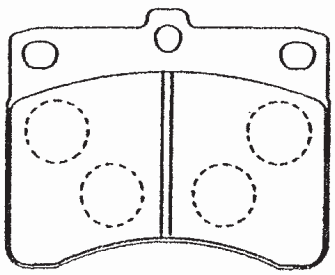

W : 78.8 H : 63.7 T : 13.5

SN240P

レーザーバン LASER(VAN) BF3VF,BF5VF 85.11～

Front

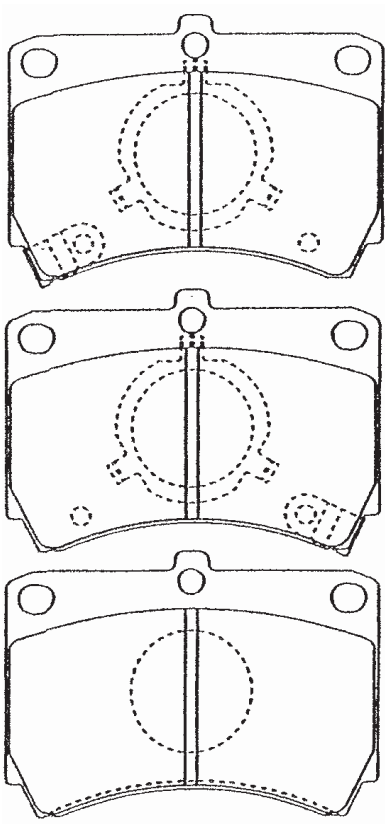

W : 91.8 H : 63.5 T : 15.0

SN244P

キャンター CANTER FE305,321,334 85.09～

ローザ ROSA BE435 86.01～

Front

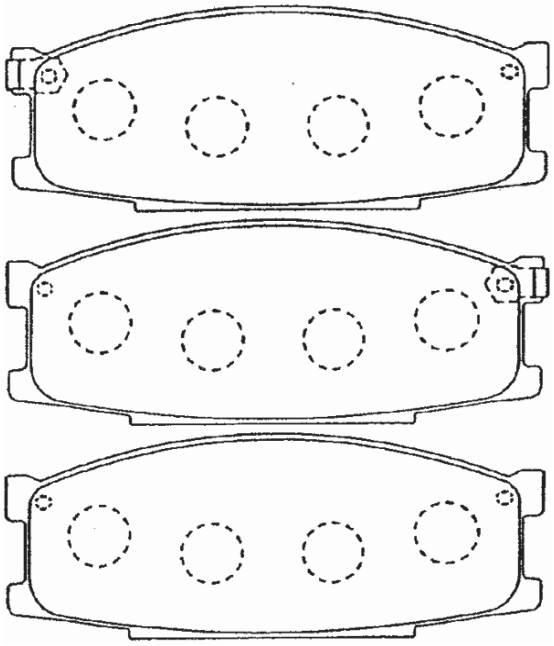

W : 133.0 H : 53.0 T : 17.5

SN244E

キャンター CANTER FE301,305,315 91.04～

ローザ ROSA BE436,437 91.10～

Front

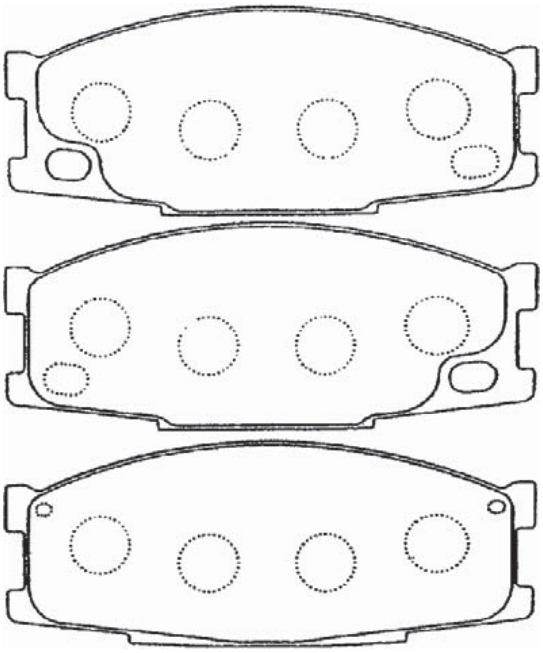

W : 133.0 H : 53.0 T : 17.5

SN245

ルーチェ LUCE HCEP,HCFS 86.07～

Front

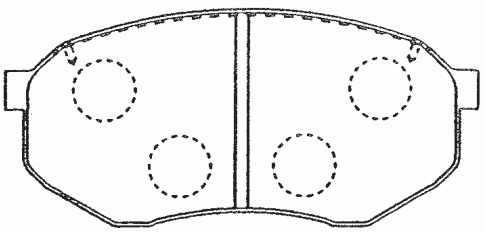

W : 116.2 H : 54.5 T : 15.5

SN257

ミニカ,ミニカトッポ MINICA H21V,22V,27V 88.11～

MINICATOPPO H31A,32A,37A 93.08～

Front

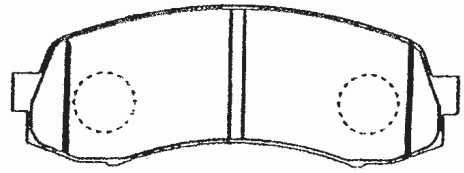

W : 111.0 H : 40.6 T : 14.5

ILLUSTRATION

SN272

Front

ユーノスコスモ EUNOSCOSMO	JC3SE,JCESE	90.11～
ランティス LANTIS	CBAEP	93.06～

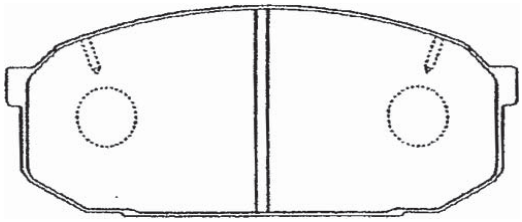

W : 128.0 H : 53.3 T : 15.5

SN274P

Front

ランドクルーザー LANDCRUISER	LJ71G	90.04～

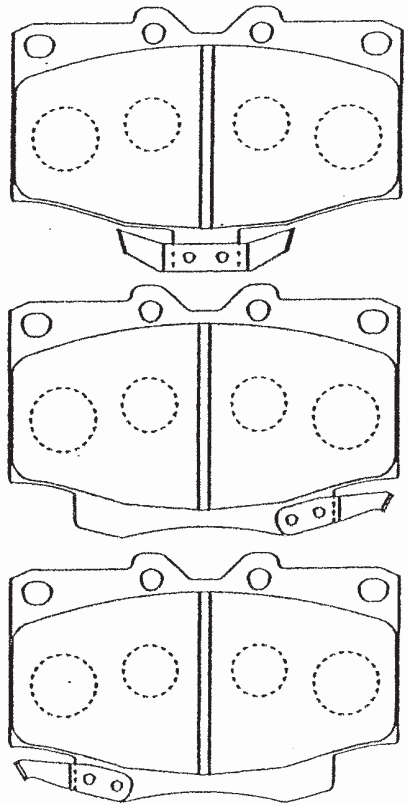

W : 107.3 H : 70.2 T : 15.0

SN279

Front

キャンター CANTER	FE305,307,311	87.09～
ローザ ROSA	BE435,439,437	89.10～

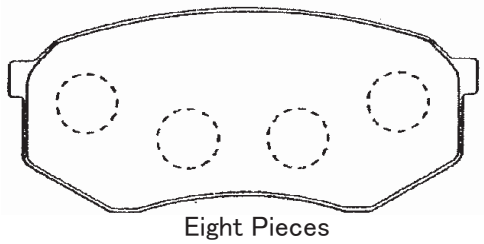

Eight Pieces

W : 116.0 H : 53.3 T : 17.5

SN279E

Front

キャンター CANTER	FE305,307,311	91.04～
ローザ ROSA	BE435,439,437	91.09～

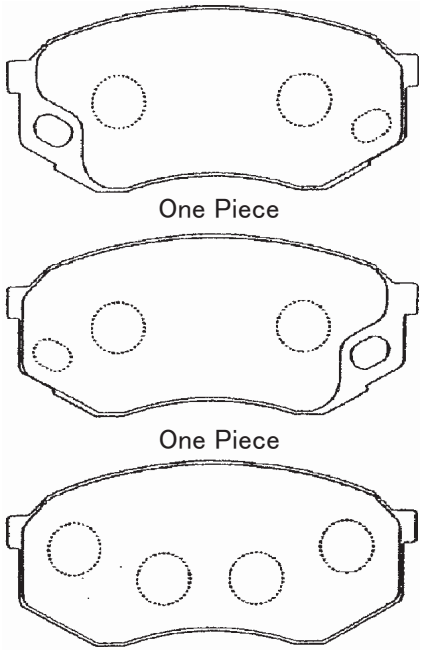

One Piece

One Piece

Six Pieces

W : 116.0 H : 53.3 T : 17.5

SN280P

Front

キャンター CANTER	FB300,308	87.09～

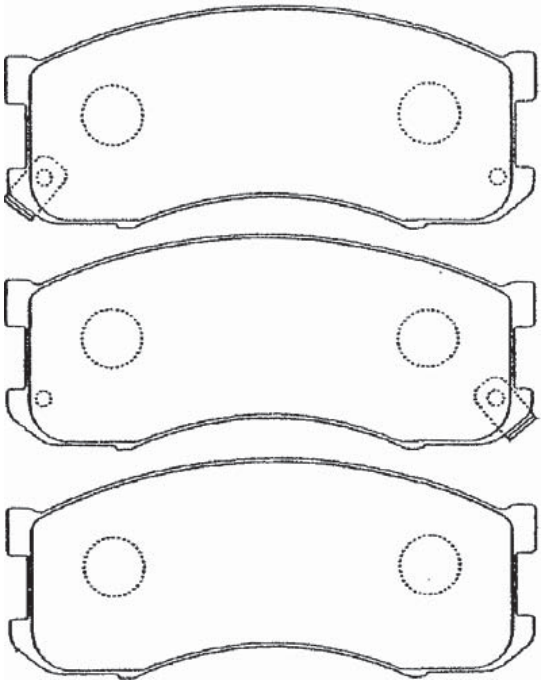

W : 133.0 H : 56.0 T : 17.5

SN280E

キャンター CANTER — FB308,500,FD378 91.04～

Front

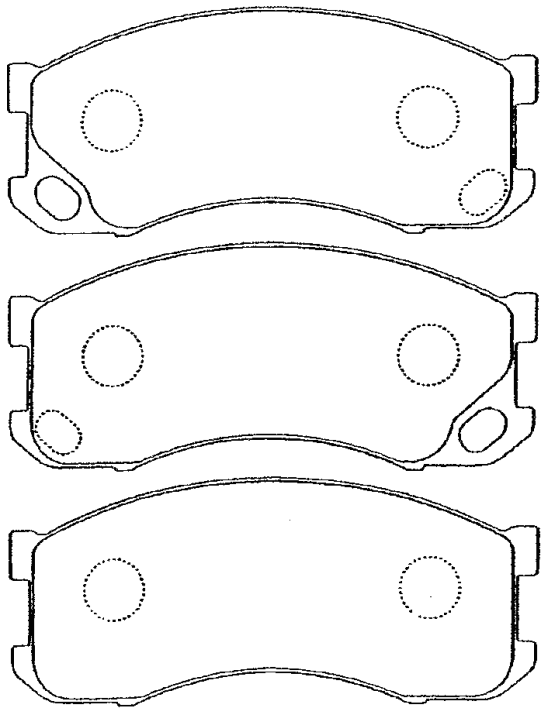

W : 133.0 H : 56.0 T : 17.5

SN410P

シビック CIVIC	EF3,4,5	87.07～
CR-X	EF7	87.07～

Front

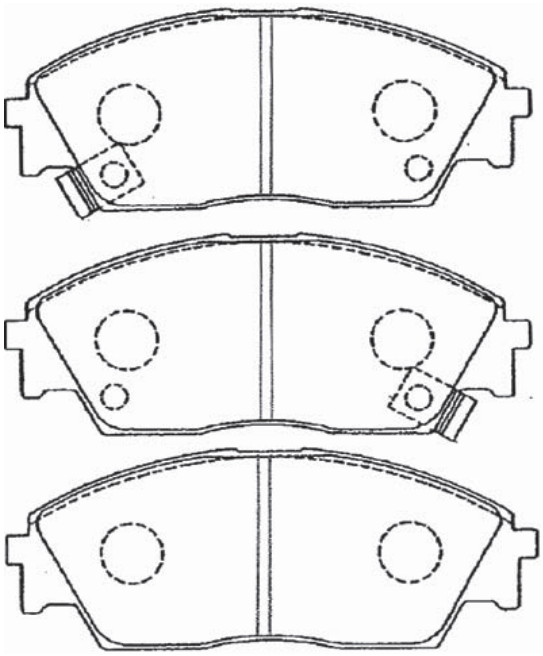

W : 132.0 H : 49.5 T : 15.0

SN281P

ボンゴ BONGO	SK82T,82V,82L	99.05～
デリカ DELICA	SK22M,22V,82V	99.05～

Front

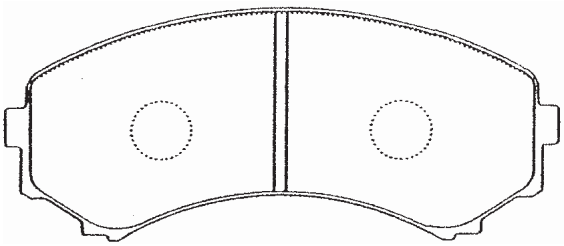

W : 139.1 H : 58.4 T : 16.0

SN414

アクティバン ACTY(VAN)	HH1,2,3,4	88.04～
アクティトラック ACTY(TRUCK)	HA3,4	90.02～

Front

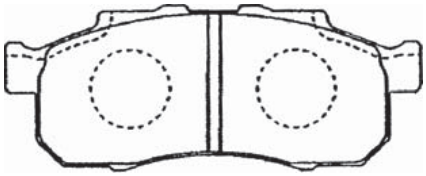

W : 104.0 H : 42.8 T : 14.5

SN284P

ハイゼット HIJET	S100C,100CT	94.01～
	S100P,110P	94.01～

Front

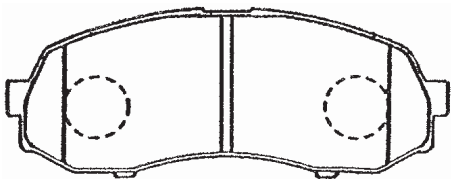

W : 110.2 H : 43.9 T : 14.5

ILLUSTRATION

SN418P

アコード ACCORD CB1,2,3,4,CD3,4 89.09～

Front

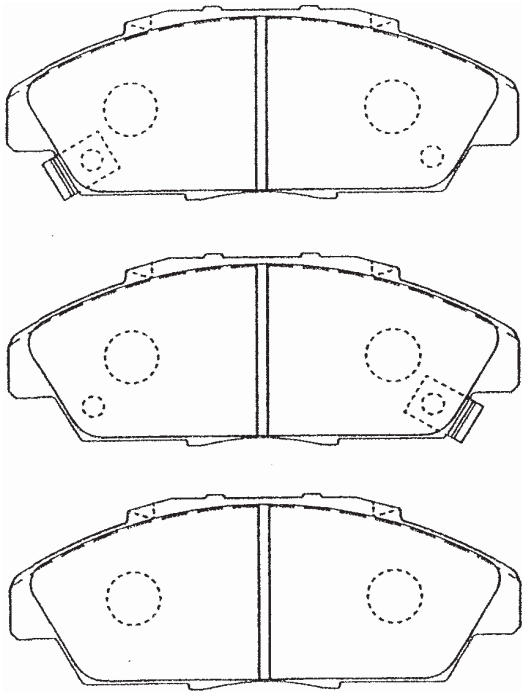

W : 141.0 H : 54.2 T : 18.5

SN424P

シビック CIVIC EG3,4,EK2,3 91.09～

ロゴ LOGO GA3 96.10～

Front

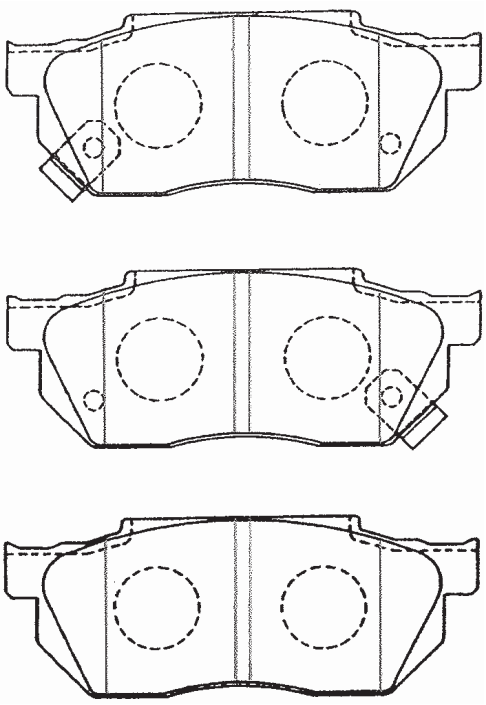

W : 116.0 H : 45.0 T : 15.0

SN422

トゥデイ TODAY JA2,3,JW3,4 90.02～

ビート BEAT PP1 91.03～

Front

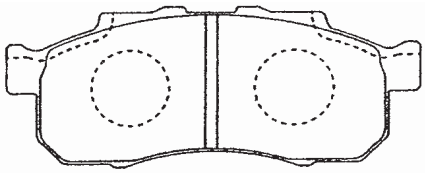

W : 104.0 H : 42.8 T : 15.5

SN428P

プレリュード PRELUDE BA8,9,BB5,6,7,8 91.09～

ビガー VIGOR CC3 92.01～

インスパイア INSPIRE CC3,UA1 95.02～

Front

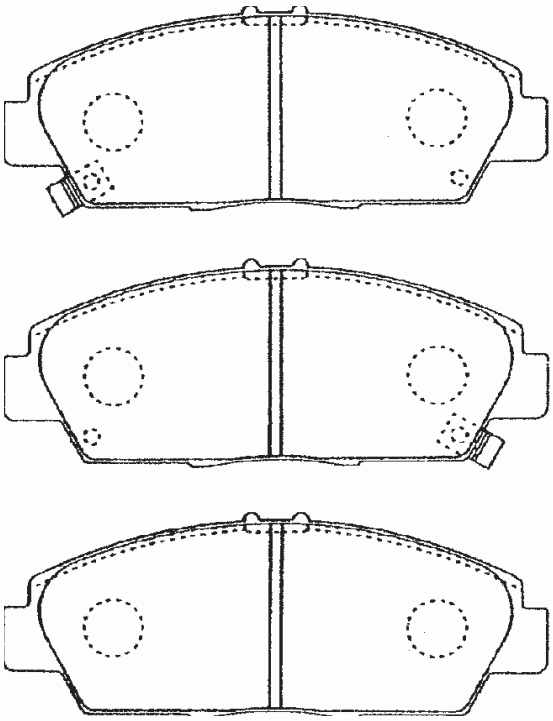

W : 137.8 H : 53.7 T : 18.5

SN430P

Front	アコード/ルネオ ACCORD,/TORNEO	CF3	97.09～
	アスカ ASKA	CJ2	97.09～

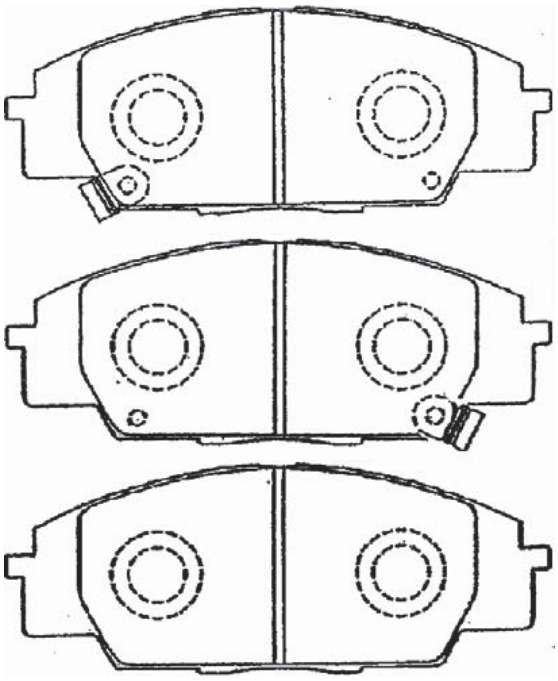

W : 135.2 H : 52.0 T : 17.0

SN433P

Rear	RX-8	SE3P	03.02～

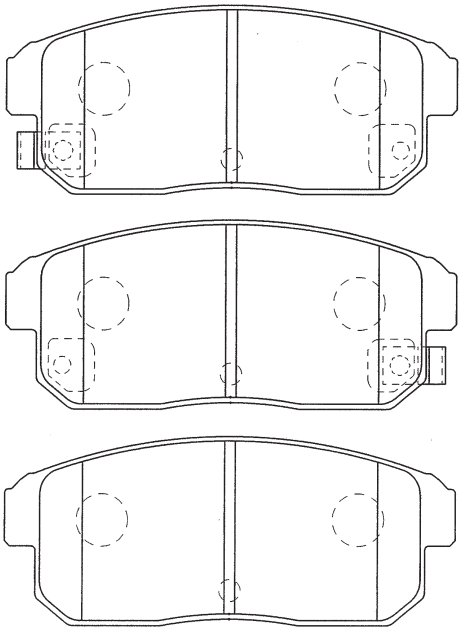

W : 105.5 H : 43.0 T : 14.5

SN432P

Front	ザッツ THAT'S	JD1,2	02.02～
	サンバー SAMBER	TW1,2	02.09～

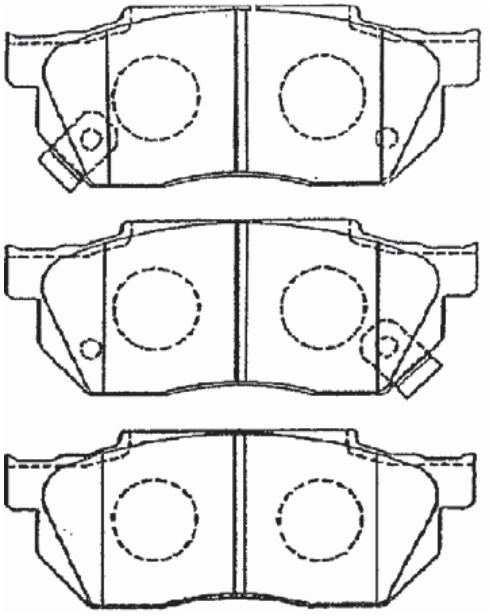

W : 116.0 H : 45.0 T : 14.0

SN434P

Front	S2000	AP1	99.04～
	シビック CIVIC	EP3	01.12～

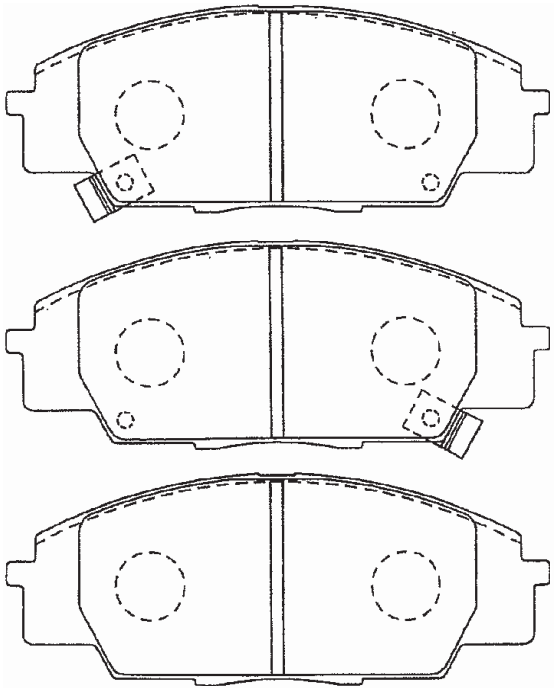

W : 135.2 H : 51.7 T : 16.0

ILLUSTRATION

SN435P ｽﾃｯﾌﾟﾜｺﾞﾝ STEPWAGON RG1,2,3,4 05.05～

Front

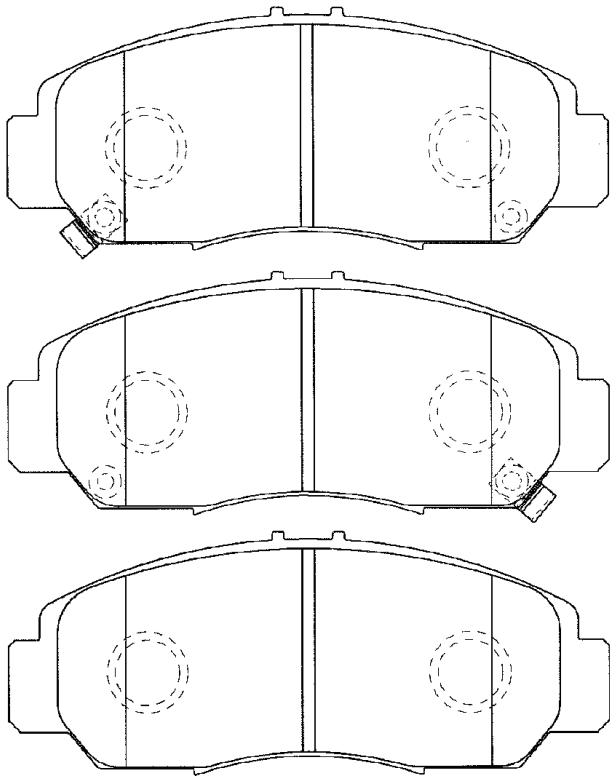

W : 148.7 H : 59.7 T : 17.0

SN439P ﾚｼﾞｪﾝﾄ LEGEND KB1 04.10～

Rear

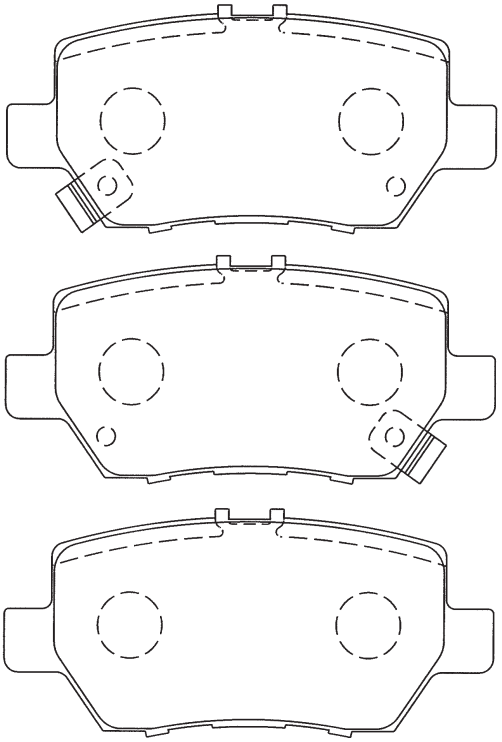

W : 106.7 H : 48.7 T : 16.0

SN436P ｴﾘｼｵﾝ ELYSION RR1,2,3,4 04.05～

Rear ｵﾃﾞｯｾｲ ODYSSEY RB1,2 03.10～

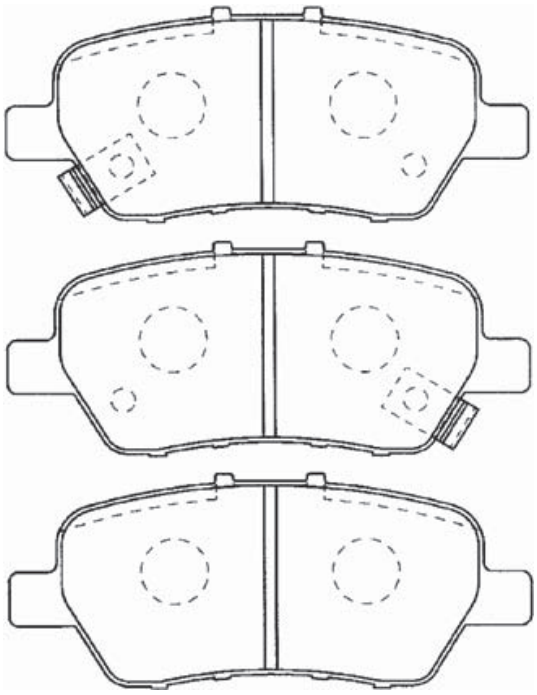

W : 108.7 H : 46.0 T : 14.5

SN441P サンバー SAMBER TT1,2 TV1,2 04.12～

Front TW1,2 04.12～

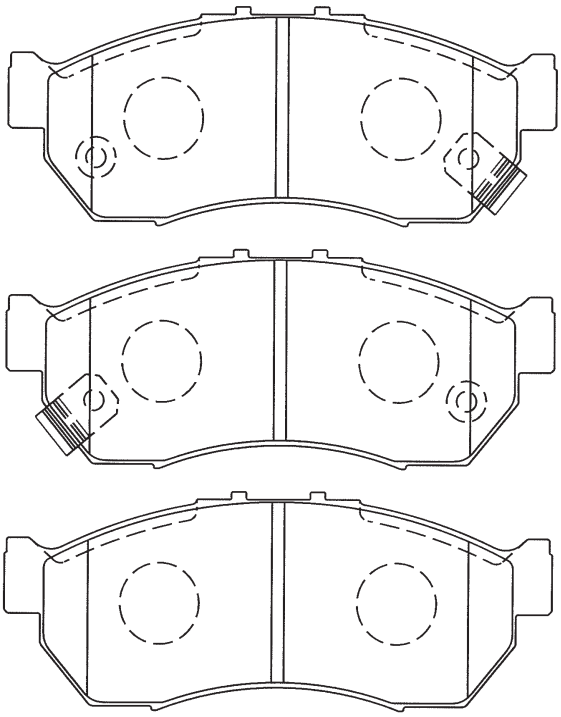

W : 111.0 H : 43.5 T : 14.5

SN502P デミオ DEMIO DE3AS,DE3FS 07.05～

Front

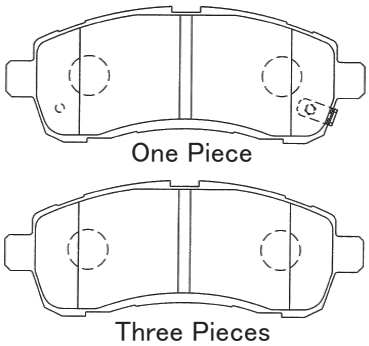

W : 125.6 H : 47.9 T : 15.0

SN443P シビック CIVIC FD1 05.09～

Front

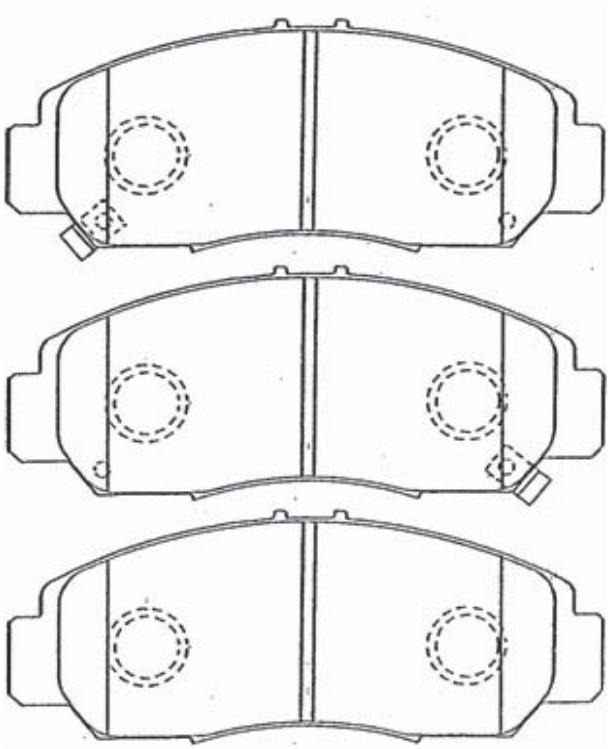

W : 148.7 H : 59.5 T : 16.5

ILLUSTRATION

SN535P

カルタスエスティーム CULTUS ESTEEM AH14S,64S 89.06～

Front カプチーノ CAPPUCCINO EA11R,21R 91.10～

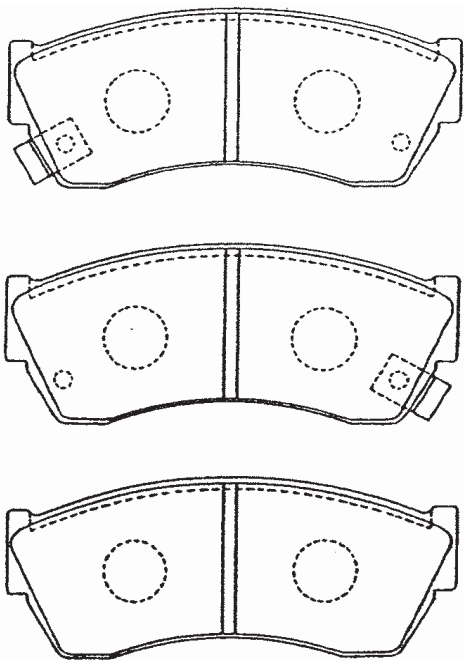

W : 107.4 H : 44.5 T : 15.0

SN538P

パオ PAO PK10 89.01～

Front フィガロ FIGARO FK10 91.02～

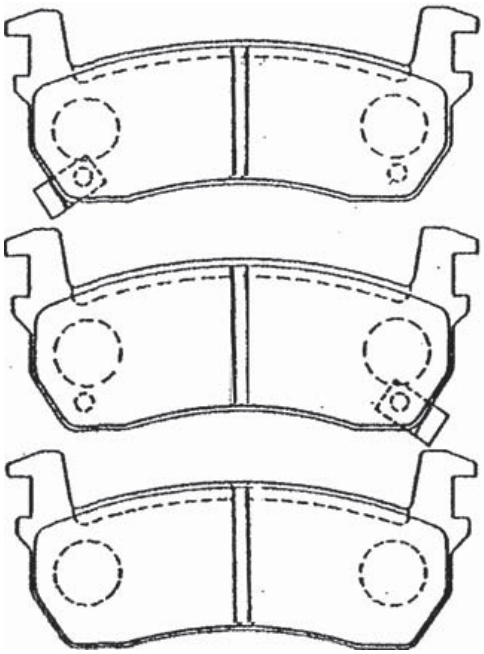

W : 108.0 H : 44.5 T : 16.0

SN539

サファリ SAFARI VRY60,WYY60 87.10～

Front WRY60,WRGY60 91.10～

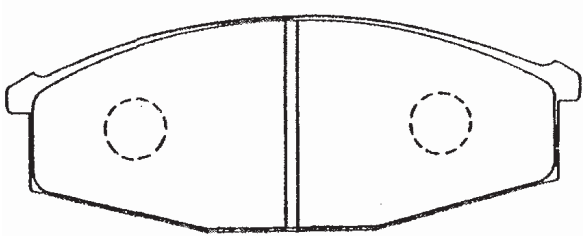

W : 142.0 H : 53.5 T : 16.3

SN539P

サファリ SAFARI VRGY60,WRY60 94.10～

Front WRGY60 94.10～

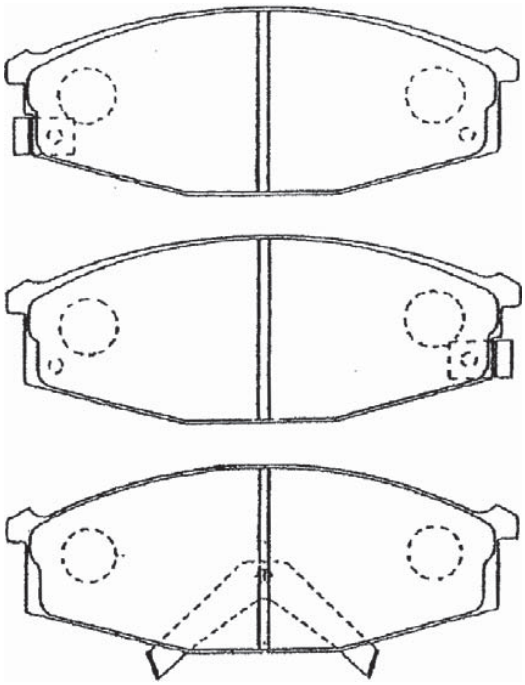

W : 142.0 H : 53.5 T : 16.3

SN566

サファリ SAFALI WGY60 91.10～

Front

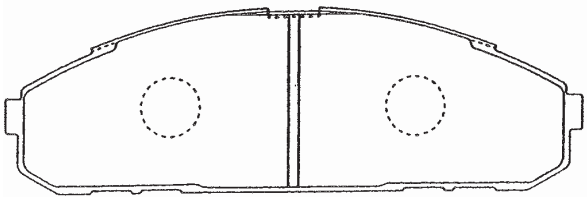

W : 170.0 H : 54.7 T : 18.0

SN569P

Front

ライフ/バモス LIFE/VAMOS	JA4,JB1,HM1,2	97.04～
アクティバン ACTYVAN	HH5,6	99.06～

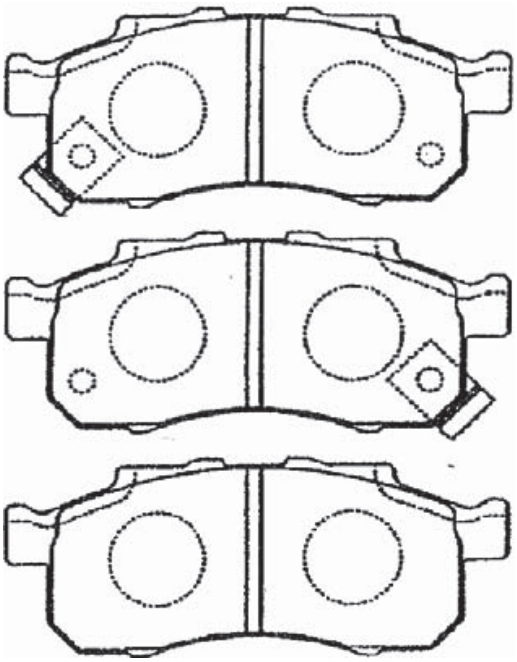

W : 104.0 H : 42.8 T : 14.5

SN571P

Front

ローレル LAUREL	HC34,SC34	93.01～
スカイライン SKYLINE	HR34	98.05～

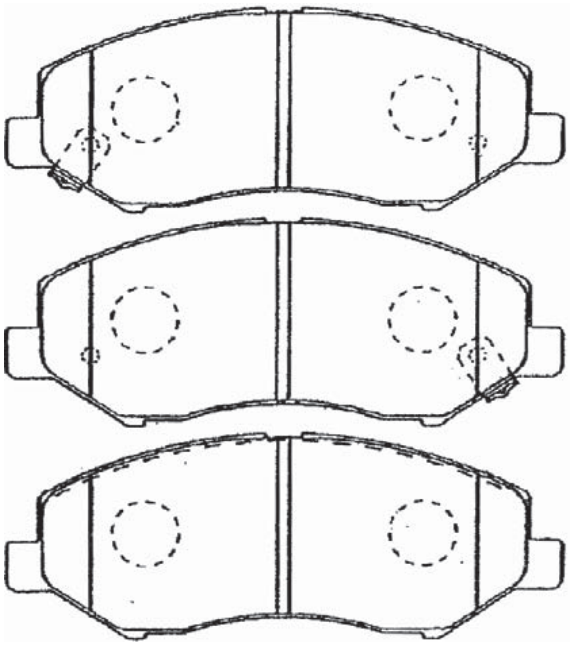

W : 139.9 H : 53.5 T : 17.0

SN574

Front

アトラス ATLUS	PF22,SJ2F23	88.10～
エルフ ELF	ASKF23,ASP8F23	95.06～

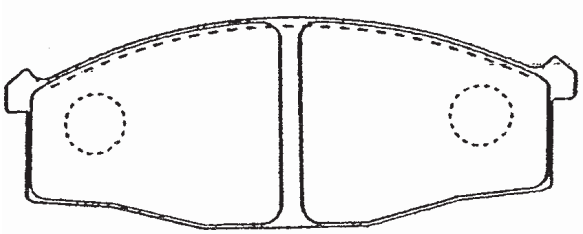

W : 142.0 H : 54.5 T : 17.8

ILLUSTRATION

SN575P

Front	ﾊﾞﾈｯﾄﾗﾙｺﾞ VANETTELARGO	NW30,NCW30	93.05～

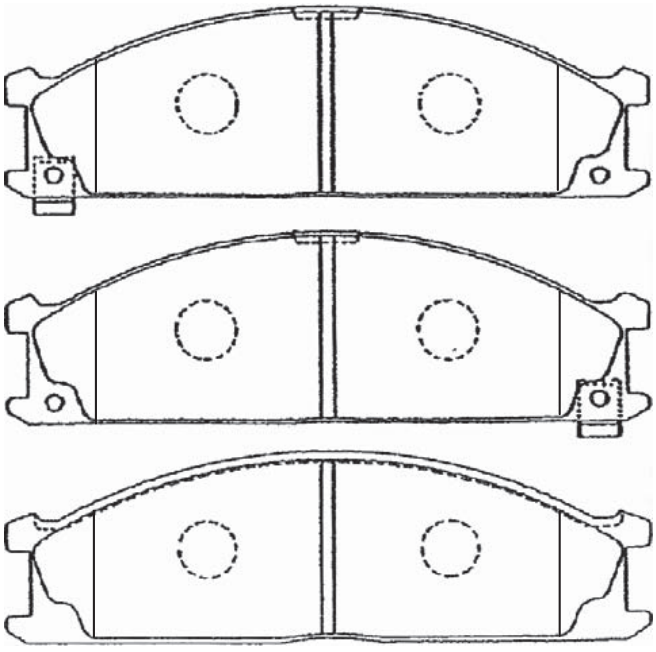

W : 160.6 H : 49.5 T : 16.0

SN580P

Front	ｻﾆｰｶﾘﾌｫﾙﾆｱ SUNNYCALIFORNIA	WFY10	90.10～
	ﾌｧﾐﾘｱﾊﾞﾝ FAMILIAVAN	VY10,WFY10	94.08～

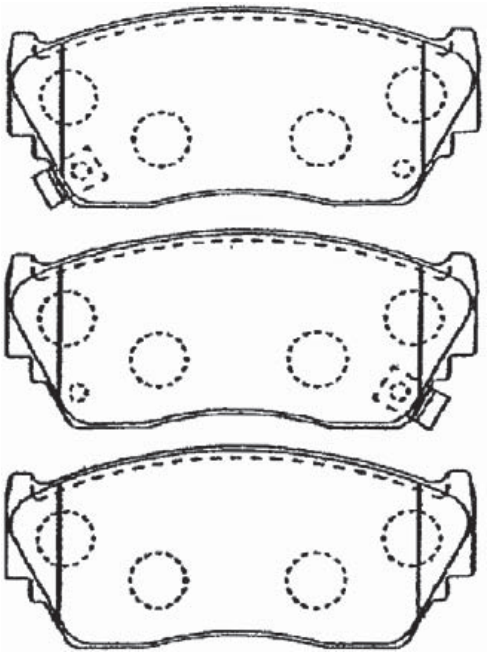

W : 108.6 H : 48.0 T : 16.5

SN582P

Front	ｷｭｰﾌﾞ CUBE	Z10,AZ10	98.02～
	ﾊｲﾊﾟｰﾐﾆ HYPERMINI	EAO	99.09～

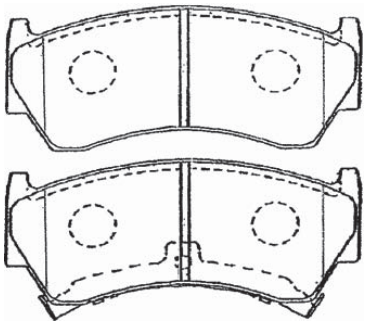

W : 108.5 H : 48.0 T : 16.0

SN585P

Front	ｳｲﾝｸﾞﾛｰﾄﾞ WINGROAD	WFY10	90.10～
	ADﾊﾞﾝ ADVAN	VY10,VFY10	94.08～

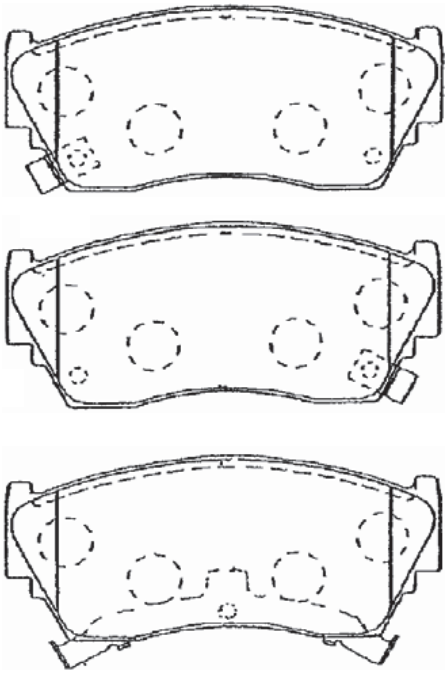

W : 108.6 H : 48.0 T : 16.5

SN586 MPV LY3P 06.02～
Rear CX-7 ER3P 06.12～

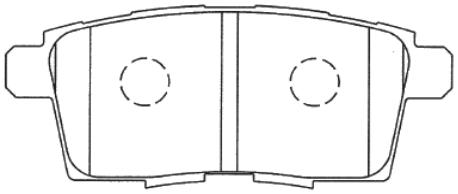

W : 110.5 H : 46.4 T : 17.0

SN590P マーチ MARCH K11,HK11,FHK11 97.05～
Front

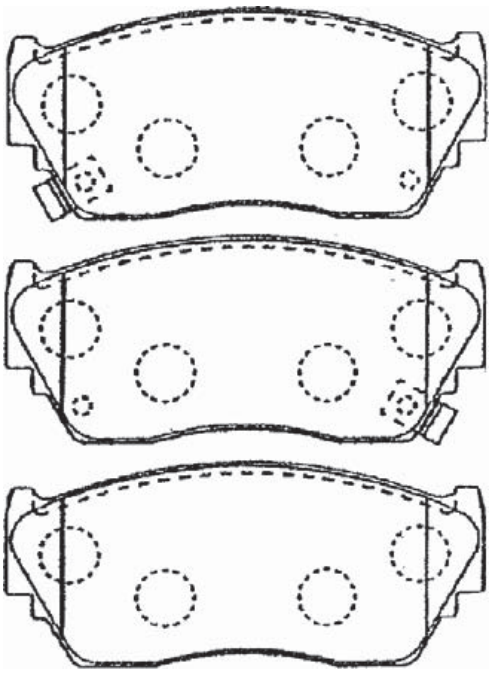

W : 108.6 H : 48.0 T : 15.5

SN599P アテンザ ATENZA GGES,GYEW 02.05～
Front

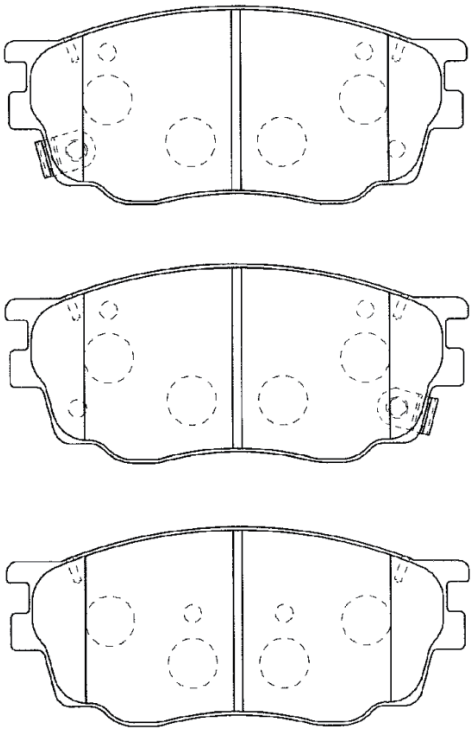

W : 131.5 H : 56.1 T : 16.0

SN596P スカイライン SKYLINE ティアナ TIANA V35,HV35,NV35 01.06～
Front J31,PJ31,TNJ31 03.02～

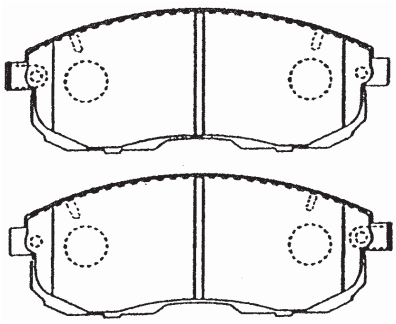

W : 137.0 H : 53.0 T : 15.5

ILLUSTRATION

SN623P

Front

シャレード CHARADE	G100S,102S	87.01～
アプローズ APPLAUSE	A101S,111S	89.06～

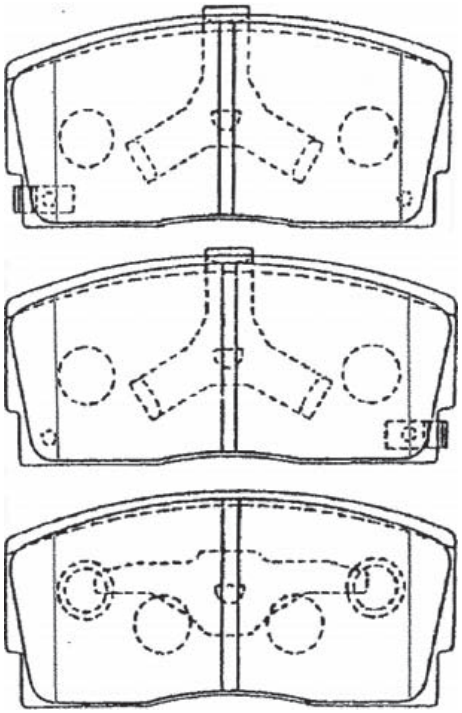

インナ Inner **W : 102.8 H : 47.2 T : 14.0**

アウタ Outer **W : 102.6 H : 47.1 T : 14.5**

SN625P

Front

シャレード CHARADE	G100S,112S	87.01～

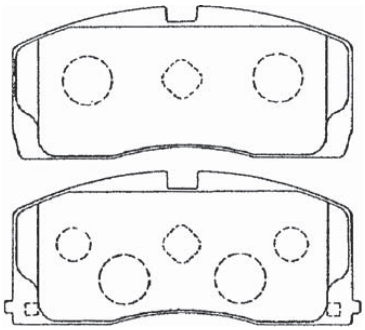

インナ Inner **W : 102.9 H : 47.0 T : 14.0**

アウタ Outer **W : 108.1 H : 45.0 T : 14.0**

SN627

Front

キャロル CAROL	AA5RA,6RA	89.10～
セルボモード CERVO MODE	CP21S,22S	90.07～

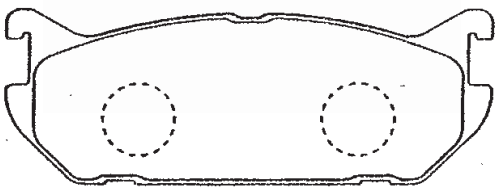

W : 102.0 H : 37.0 T : 13.6

SN641

Front

ビスタ/カムリ VISTA/CAMRY	SV30,32,33,CV30	90.07～

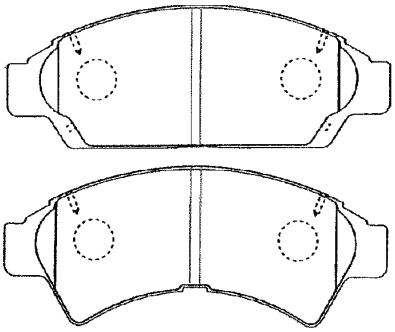

インナ Inner **W : 144.4 H : 53.5 T : 15.5**

アウタ Outer **W : 144.4 H : 58.5 T : 15.5**

SN648P

Rear

マークⅡワゴン MARK Ⅱ WAGON	MCV21W,25W	97.04～
ハリアー HARRIER	ACU10W,15W	97.12～

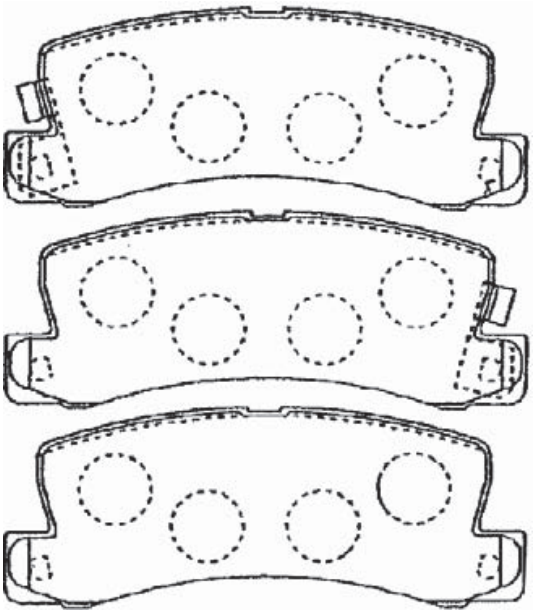

W : 107.6 H : 42.5 T : 15.0

SN649

Rear

アルト ALTO	CR22S,CM22S	91.09～
セルボモード CERVO MODE	CN32S,CP32S	91.09～

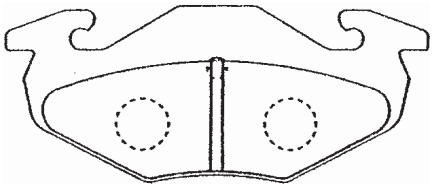

W : 105.0 H : 43.5 T : 12.5

SN650

Front

クィックデリバリー QUICKDELIVERY	BU68VH	95.05～
レンジャー RENGER	BU142	96.09～

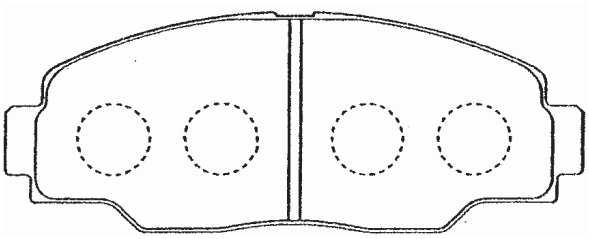

W : 144.3 H : 57.0 T : 15.6

SN652P

Front

カルタス CALTUS	AA44S,AB44S	88.09～
カルタスクレセント CULTUS CRESCENT	GA11S(ABS無)	95.01～

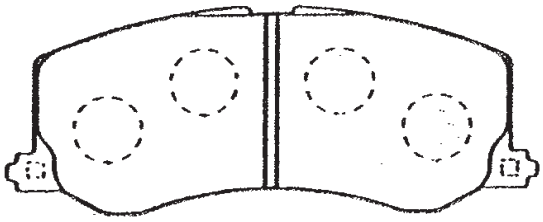

W : 109.4 H : 44.1 T : 14.0

SN657P

Rear

センティア/MS-9 SENTIA/MS-9	HD5S,5P,ES,EP	91.03～

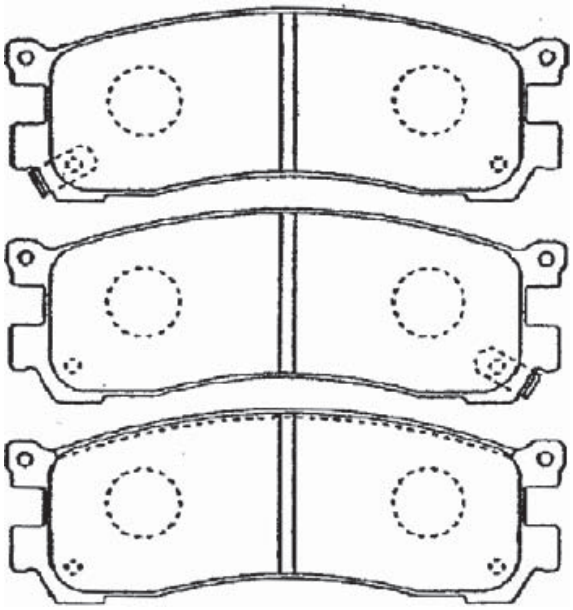

インナ Inner **W : 117.1 H : 42.5 T : 16.0**

アウタ Outer **W : 117.1 H : 42.5 T : 15.0**

SN654

Front

ミニキャブ MINICAB	U41T,41TP,42T	90.12～
ブラボー BRAVO	U41V,42V,43V	90.12～

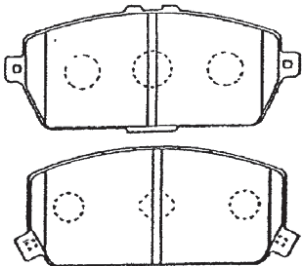

インナ Inner **W : 100.4 H : 45.1 T : 15.0**

アウタ Outer **W : 94.6 H : 42.0 T : 15.7**

SN658

Front

ヴィヴィオ VIVIO	KK3,4,KY3,KW3	92.03～

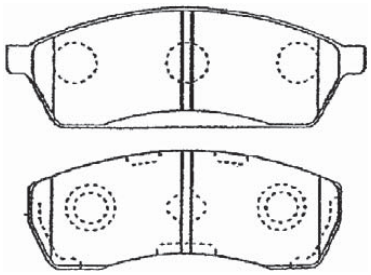

インナ Inner **W : 112.0 H : 39.0 T : 14.0**

アウタ Outer **W : 98.0 H : 39.0 T : 14.0**

SN656

Rear

ユーノス500 EUNOS500	CA8P,8PE,CAPP	91.12～
テルスターⅡ TELSTAR Ⅱ	CG2PPF,2SPF	94.07～

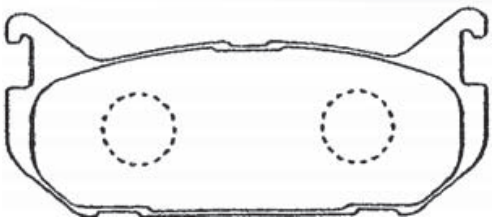

W : 100.0 H : 43.5 T : 13.5

SN666P

Front

セリカ CELICA	ST202	93.09～
カリーナED CALINA ED	ST202,205	93.09～

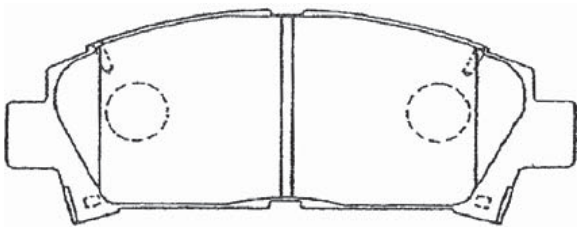

W : 141.0 H : 56.5 T : 17.5

ILLUSTRATION

SN670

ﾐﾆｷｬﾌﾞ MINICAB U41TP,42TP 95.01～

Front

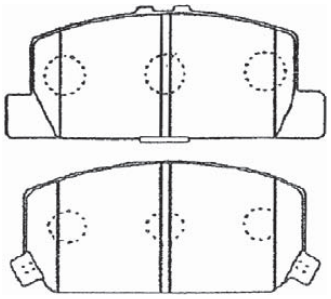

ｲﾝﾅ Inner **W : 100.4 H : 45.1 T : 15.0**

ｱｳﾀ Outer **W : 94.6 H : 42.0 T : 15.7**

SN680

ｸﾗｳﾝ CROWN GS171,JZS171 99.09～

Front ﾌﾟﾛｸﾞﾚ PROGRES JCG10,11 01.04～

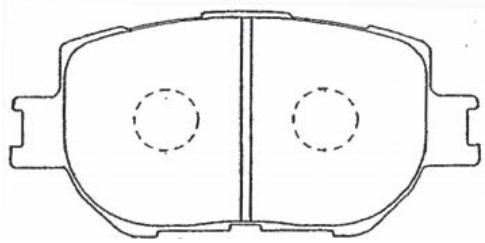

W : 117.6 H : 58.5 T : 17.5

SN674

ｽｸﾗﾑ SCRUM DG52T,52V 99.01～

Front ｷｬﾘｲ/ｴﾌﾞﾘｲ CARRY/EVERY DA52T,52V,52W 99.01～

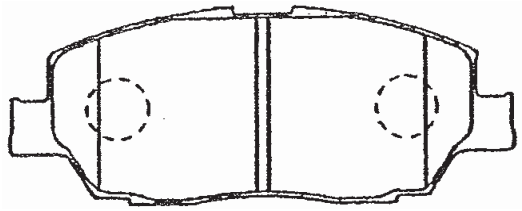

W : 106.2 H : 42.1 T : 15.0

SN681

ｻﾝﾊﾞｰ SAMBAR TW1,2,TV1,2 99.01～

Front TT1,2 99.01～

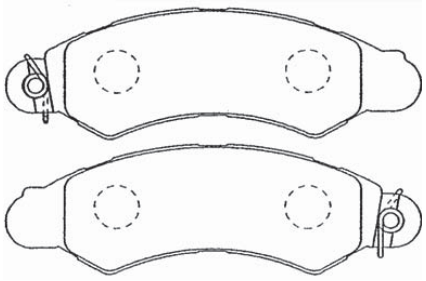

W : 130.8 H : 42.8 T : 14.5

SN676P

ｱﾄﾚｰﾜｺﾞﾝ ATRAYWAGON S220G,230G 99.05～

Front ﾊｲｾﾞｯﾄ/ｱﾄﾚｰ HIJET/ATRAY S200W,210W 00.01～

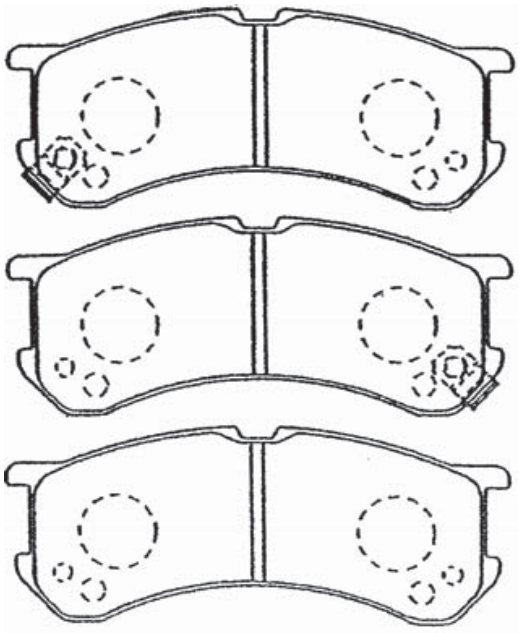

W : 106.2 H : 42.4 T : 15.0

SN681P

ｻﾝﾊﾞｰ SAMBAR TV1,2,TT1,2(AKABOU 99.01～

Front

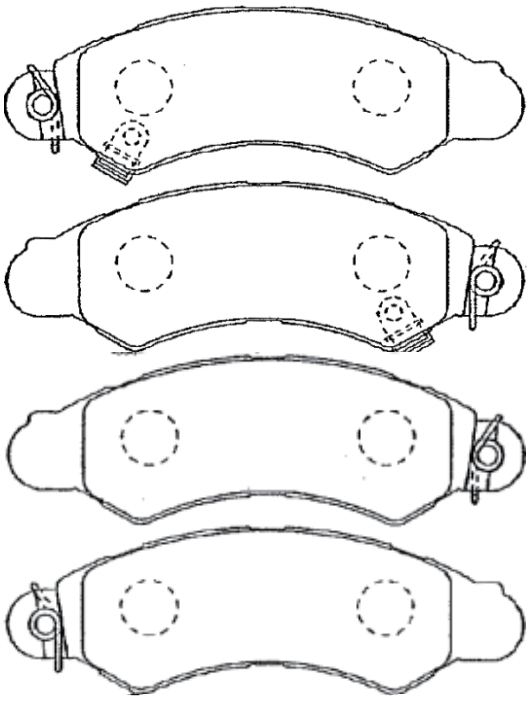

W : 130.8 H : 42.8 T : 14.5

SN682P

エルフ ELF | NPR66L,66G | 01.01～

Front

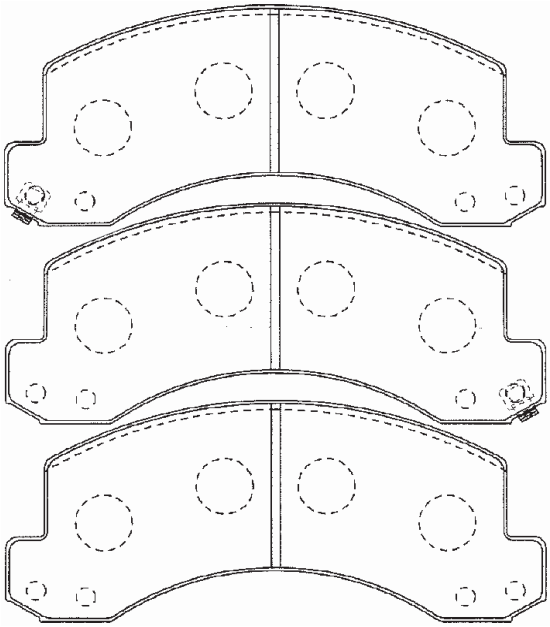

W : 170.9 H : 71.8 T : 20.0

SN684P

エリオ AERIO | RB21S | 01.01～

Front

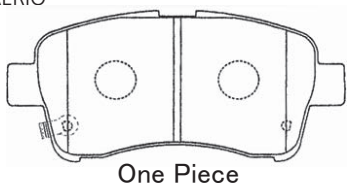

One Piece

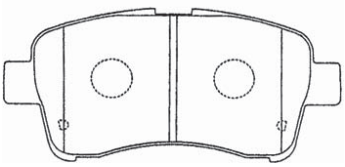

Three Pieces

W : 116.6 H : 56.2 T : 15.5

SN693

Front	R2	RC1,2	03.11～
	R1	RJ1,2	05.01～
	ステラ STELLA	R15	06.04～

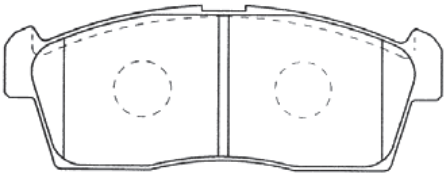

W : 108.5 H : 41.9 T : 14.0

SN732

デリカ DELICA | L036P,63P,69P | 86.04～

Front

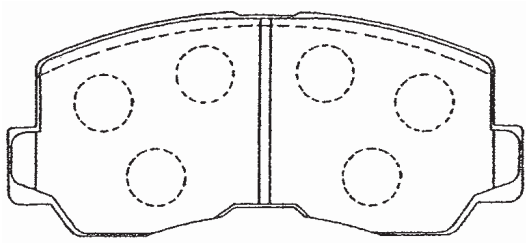

W : 127.6 H : 57.0 T : 15.5

SN760P

Front	シルビア SILVIA	KS13,PS13	88.05～
	マーチ MARCH	EK10	88.08～

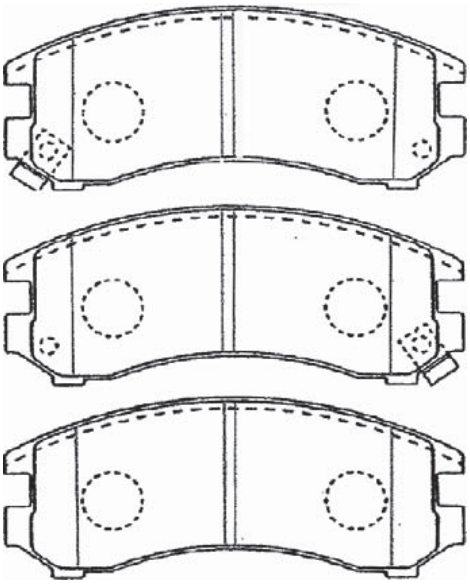

W : 114.8 H : 47.5 T : 16.0

SN766

レックス,コンビ REX,COMBI | KH3,4,KP3,4 | 90.03～

Front

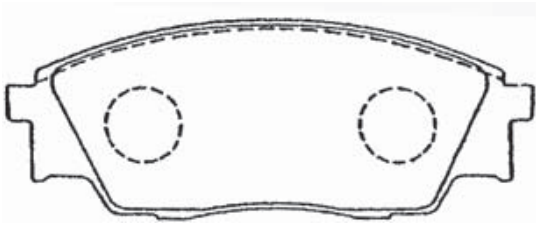

W : 103.0 H : 39.3 T : 13.8

ILLUSTRATION

SN783P

Front

アベニール AVENIR	VEW10,W10	90.05～
バネット VANETTE	VAJC23,VVJC23	91.06～

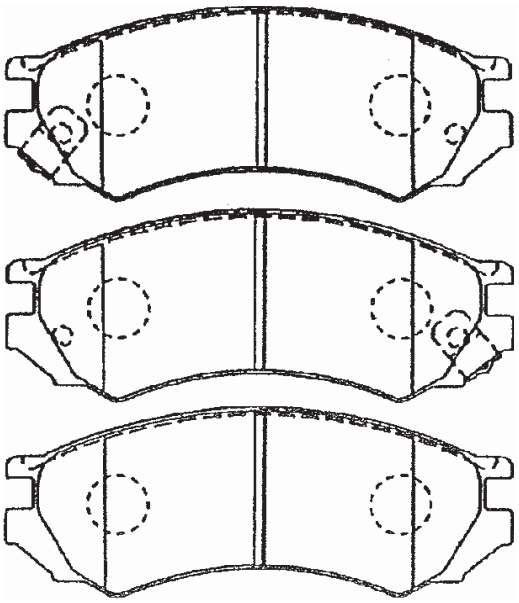

W : 127.8 H : 50.5 T : 16.0

SN792P

Rear

パルサー PULSAR	FN14,FNN14	90.08～
ラシーン RASHEEN	RFNB14	94.12～

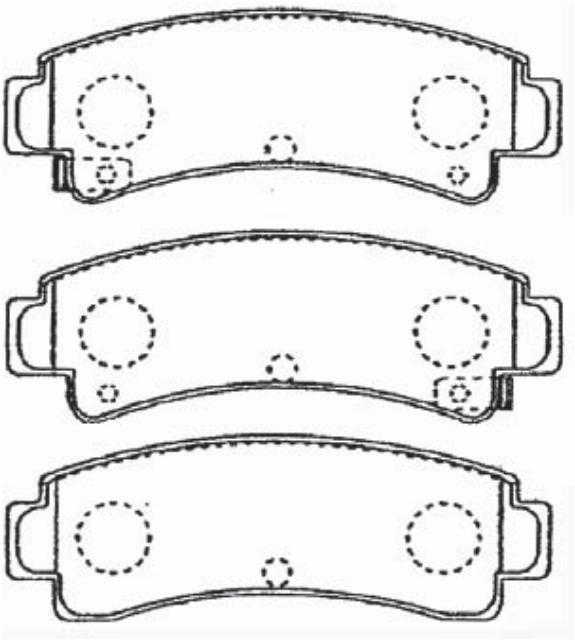

W : 98.8 H : 35.5 T : 16.0

SN785

Rear

カペラ CAPELLA	GDEA,EB,8A	87.03～
テルスター TELSTAR	GD8PF,EAF,EPF	89.04～

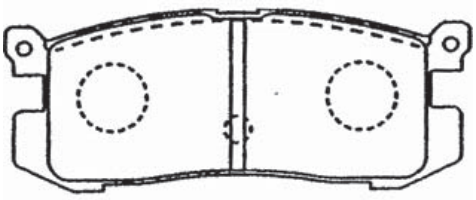

W : 104.0 H : 42.2 T : 13.0

SN791

Rear

サファリ SAFARI	VRY60,WRGY60	87.10～

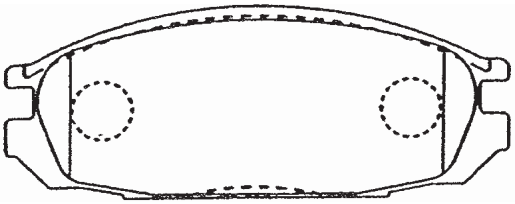

W : 127.8 H : 50.5 T : 18.8

SN794P

Front

レガシィ LEGACY	BC2,BCK,BG4,5	89.02～
インプレッサ IMPREZZA	GC1,2,4,6,GF1,2	92.11～

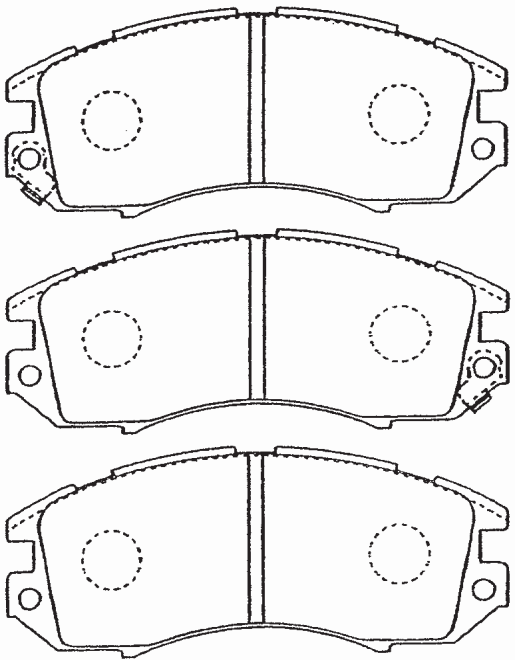

W : 127.8 H : 54.4 T : 17.0

SN798P

Front	ADﾊﾞﾝ/ﾜｺﾞﾝ ADVAN/WAGON	WFY10,VSY10	90.10～
	ﾌｧﾐﾘｱ FAMILIA	WEY10,VFY10	94.08～

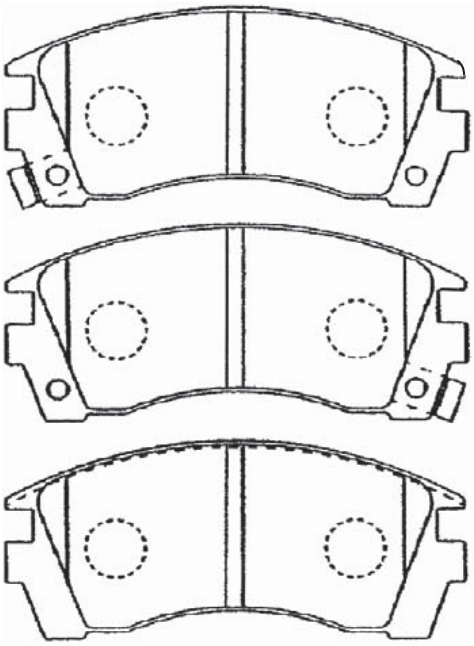

W : 114.8 H : 51.1 T : 15.5

SN813P

Front	ｱﾄﾗｽ,ｺﾝﾄﾞﾙ ATLAS/CONDOR	SW2H41,DW2H41	91.10～
	ｼﾋﾞﾘｱﾝ CIVILIAN	BW40,BGW40	93.04～

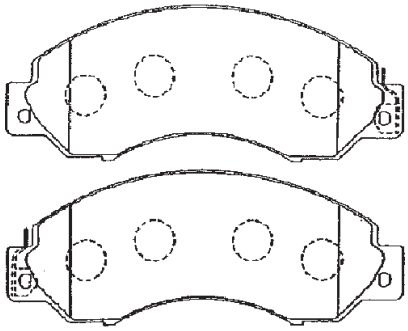

W : 177.5 H : 68.5 T : 20.0

SN823

Front	ﾀﾞｲﾅ,ﾄﾖｴｰｽ DYNA/TOYOACE	YY51,52,61,201	87.08～
		LY201,211	95.05～

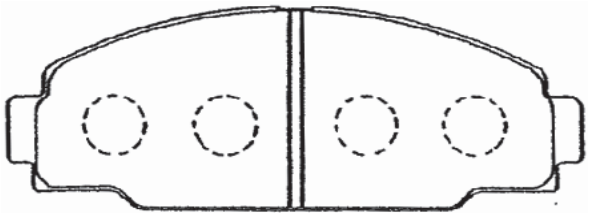

W : 144.3 H : 53.0 T : 15.5

SN803P

Front	ｻﾆｰ SUNNY	JB14	97.08～

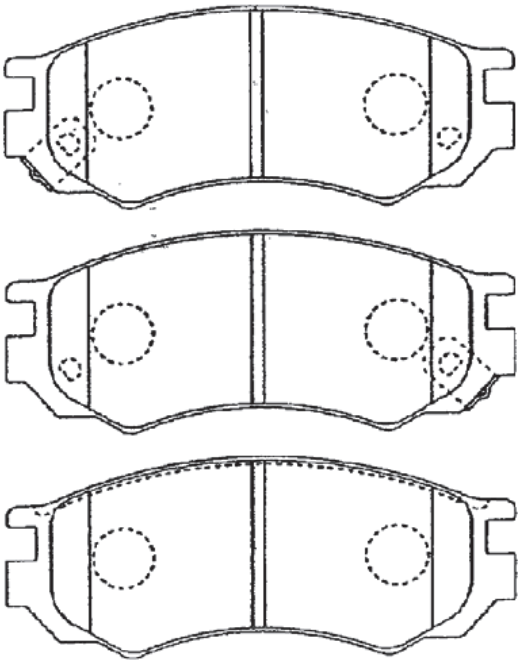

W : 127.8 H : 50.8 T : 15.0

SN825P

Front	ﾗｲﾄｴｰｽﾉｱ LITEACENOAH	YM40G,CM40G	88.08～
	ﾗｲﾄ/ﾀｳﾝｴｰｽ LITE/TOWNACE	YM60,65,CM52,61	88.08～

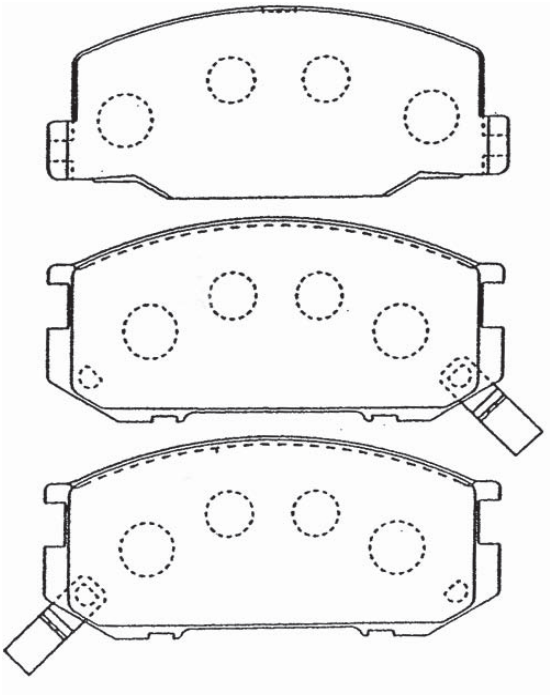

ｲﾝﾅ Inner **W : 128.2 H : 55.0 T : 15.5**

ｱｳﾀ Outer **W : 126.7 H : 57.0 T : 15.5**

SN826P

デルタ DELTA CB31G 94.10～

Front ライト,タウンエース LITE/TOWNACE CM65 96.11～

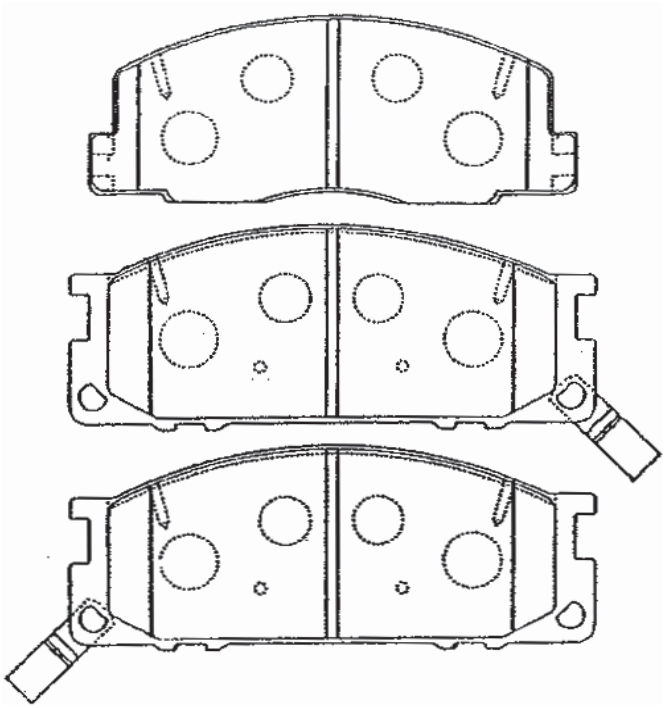

インナ Inner **W : 128.4 H : 52.0 T : 15.5**

アウタ Outer **W : 136.7 H : 55.0 T : 15.5**

SN827P

デルタ DELTA YB25V,CB21G 92.01～

Front ライト,タウンエース LITE/TOWNACE CM55 94.04～

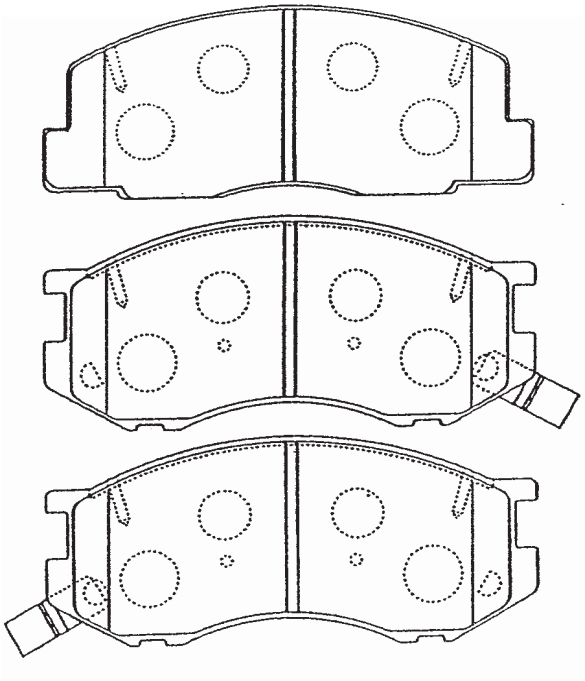

インナ Inner **W : 128.3 H : 52.0 T : 15.5**

アウタ Outer **W : 126.7 H : 55.0 T : 15.5**

SN831

サニートラック SUNNYTRUCK B122,GB122 89.10～

Front

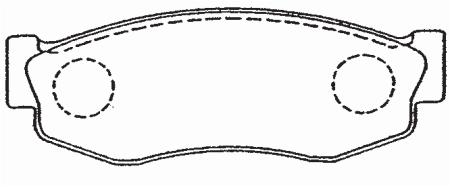

W : 108.6 H : 40.0 T : 16.0

SN835P

パイザー PYZAR G303G,313G 96.08～

Front G301G,311G 97.09～

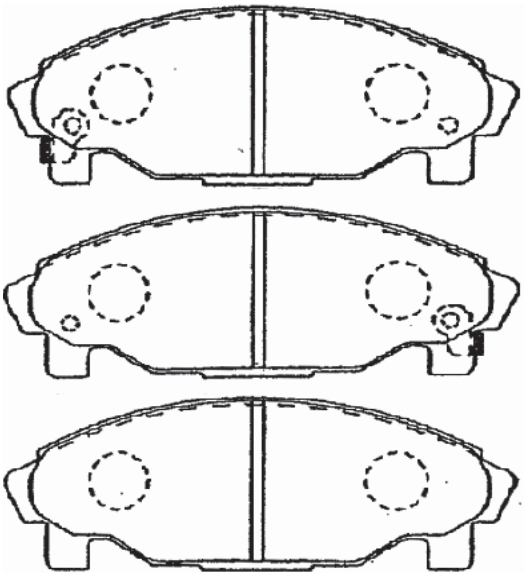

W : 127.6 H : 45.3 T : 15.0

SN836P

アトラス/コンドル ATRAS/CONDOR AKR66E,BKR66E 95.05～

Front AKR69E,BKR69E 95.05～

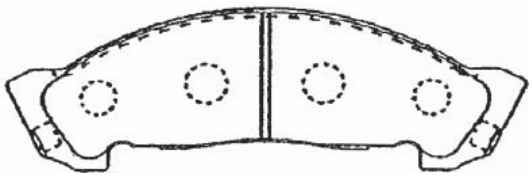

W : 191.2 H : 62.2 T : 21.0

SN839P サファリ SAFARI

Rear

WYY60,VRGY60	94.10～
WRY60,WRGY60	94.10～

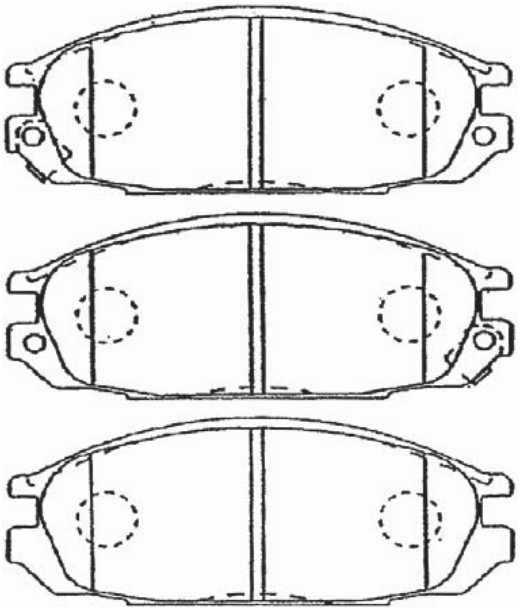

W : 127.8 H : 50.7 T : 19.0

SN842P リベロ LIBERO

Rear

CD5W	92.04～

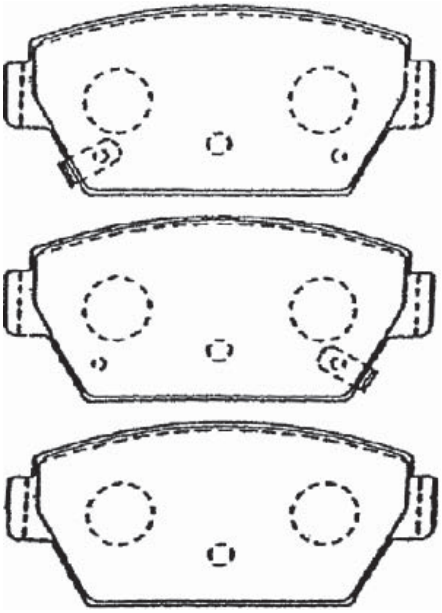

W : 96.2 H : 44.2 T : 14.5

SN841P エルフ ELF

Front

NKR55E,55L	90.05～
WHR55,VHR69K	93.12～

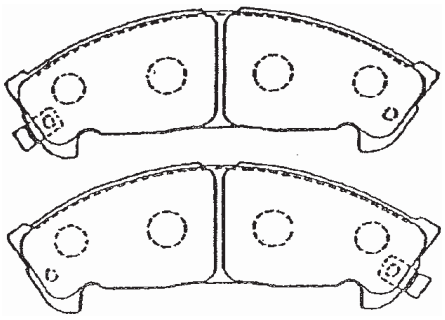

W : 177.3 H : 63.2 T : 18.8

SN843 ミニカ MINICA

Rear

H36A (ダンガン)	93.08～

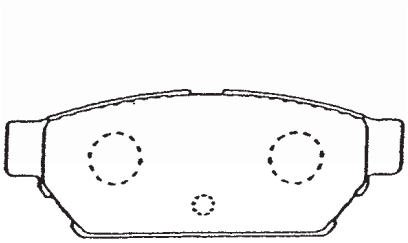

W : 98.8 H : 37.5 T : 14.5

SN847 ユーノス800 EUNOS800 / ミレーニア MILLENIA

Rear

TA3A,3P,3Y,3Z	93.08～
TAFP	90.10～

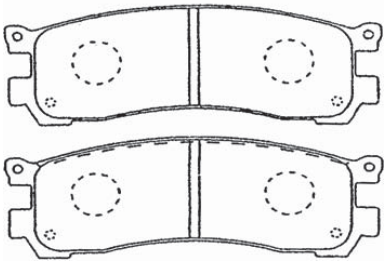

インナ Inner **W : 117.1 H : 42.5 T : 15.0**

アウタ Outer **W : 117.1 H : 42.5 T : 14.0**

ILLUSTRATION

SN848P

Front

ｶﾍﾟﾗｶｰｺﾞﾜｺﾞﾝ CAPELLACARGO	GVFR,GVER	92.07～
ﾃﾙｽﾀｰﾜｺﾞﾝ TELSTAR WAGON	GVERF,GVFRF	92.07～

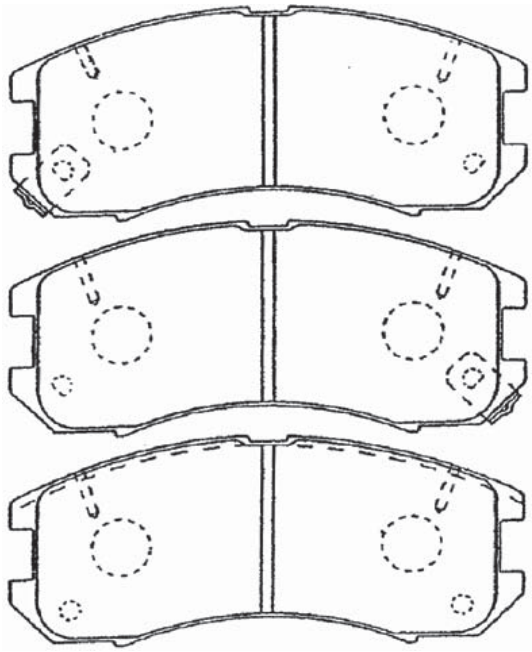

ｲﾝﾅ Inner **W : 129.8 H : 55.8 T : 16.0**

ｱｳﾀ Outer **W : 129.8 H : 55.8 T : 15.0**

SN858P

Front

ｴﾙﾌ ELF	NKR55,56,NPR57	88.06～

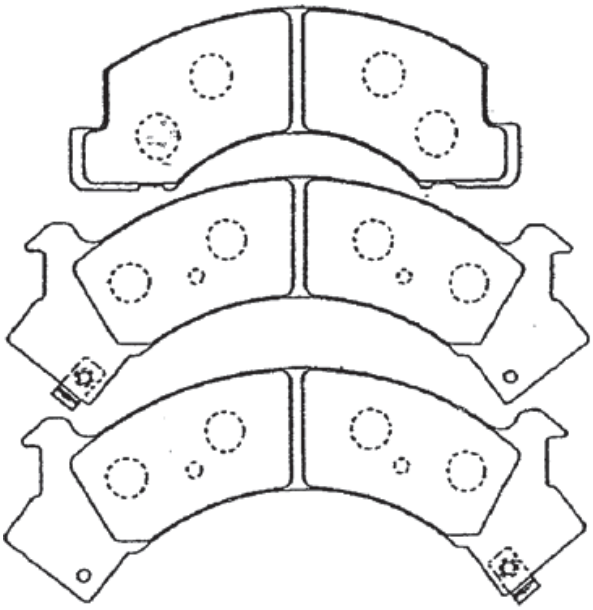

ｲﾝﾅ Inner **W : 183.5 H : 69.8 T : 22.0**

ｱｳﾀ Outer **W : 238.0 H : 92.5 T : 22.0**

SN851P

Front

ﾗｲﾄ,ﾀｳﾝｴｰｽﾉｱ LITE/TOWNACE	SR50G,CR50G	96.10～
ﾗｲﾄ/ﾀｳﾝｴｰｽ LITE/TOWNACE	CR51V,52V	96.11～

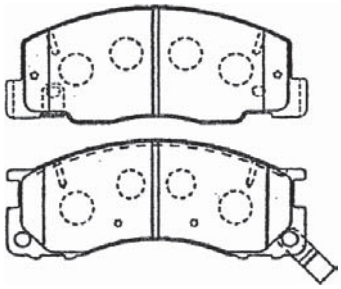

ｲﾝﾅ Inner **W : 128.3 H : 52.0 T : 15.5**

ｱｳﾀ Outer **W : 136.7 H : 55.0 T : 15.5**

SN861

Rear

ｸﾚｾﾝﾄﾜｺﾞﾝ CRESCENT	GC41W	96.02～

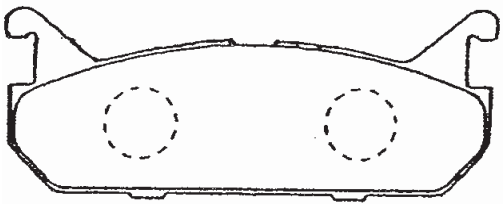

W : 102.0 H : 40.0 T : 12.0

SN853P

Front

ｱﾍﾞﾆｰﾙ,ｻﾘｭｰ AVENIR SALUT	VEW10,VENW10	93.12～
ﾊﾞﾈｯﾄｾﾚﾅ VANETTESERENA	KAJC23,VAJC23	98.01～

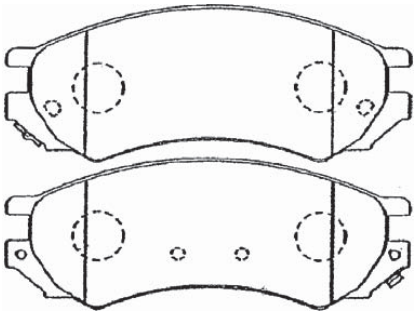

W : 127.8 H : 50.5 T : 16.0

SN865

Front

ﾀｲﾀﾝ TITAN	WGFAT,WGLAT	89.04～
	WGEAT,WGFAT	89.05～

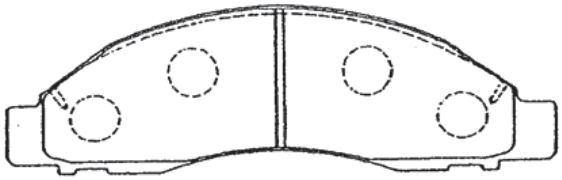

W : 202.7 H : 64.0 T : 18.0

SN876

ﾐﾆｷｬﾌﾞﾌﾞﾗﾎﾞｰ MINIICAB/BRAVO U61V,62V 98.11～

Front ﾐﾆｶﾄｯﾎﾟ MINICA/TOPPO H42V,47V 00.11～

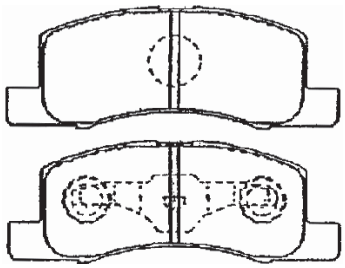

W : 103.4 H : 38.8 T : 15.0

SN882

EKﾜｺﾞﾝ EKWAGON H82W 06.09～

Front ｵｯﾃｨ OTTI H92W 06.10～

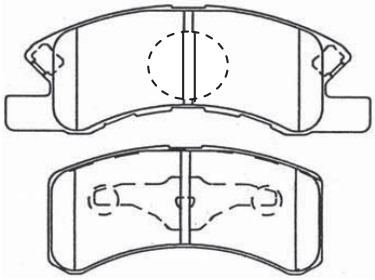

ｲﾝﾅ Inner **W : 122.1 H : 44.3 T : 14.5**

ｱｳﾀ Outer **W : 92.0 H : 44.3 T : 14.5**

SN881

ｼﾋﾞﾘｱﾝ CIVILIAN BVW41,BHW41 99.02～

Front BCW41,BJW41 99.02～

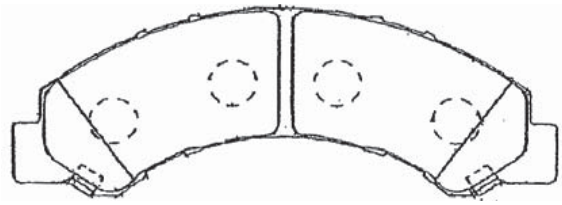

W : 206.4 H : 74.6 T : 21.0

SN886P

ﾐｭｰ/ｳｨｻﾞｰﾄﾞ MU/WIZARD UES73,UER25 98.03～

Front

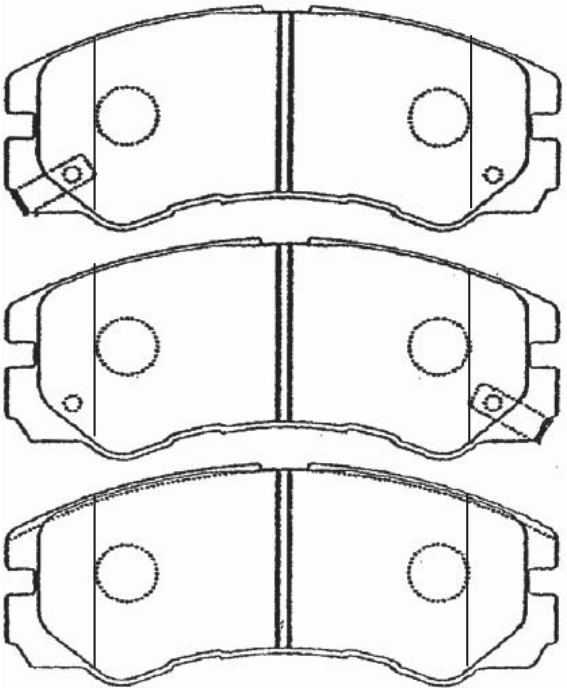

W : 137.8 H : 58.7 T : 15.5

SN888

ｴﾙﾌ ELF NHR69 97.04～

Front

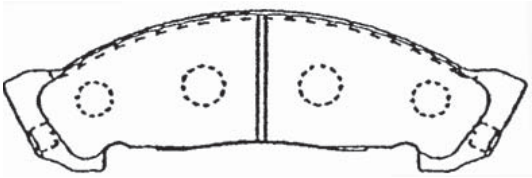

W : 192.6 H : 62.2 T : 19.0

ILLUSTRATION

SN893 ハリアー HARRIER ACU10W 01.08～

Front

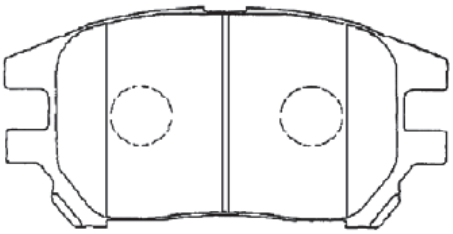

W : 114.6 H : 59.5 T : 16.9

SN904 タイタン TITAN LPR81,LPS81 04.07～

Front

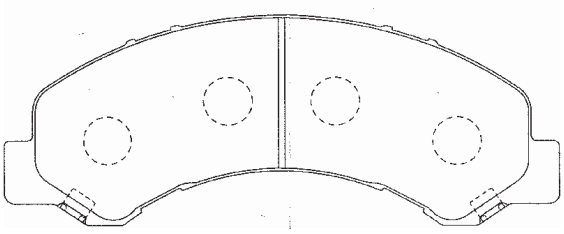

W : 206.5 H : 79.7 T : 20.0

SN897P ライトエース LITEACE KM80,85 99.06～

タウンエース TOWNACE CM80,85 99.06～

Front

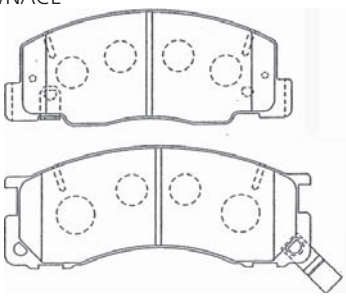

インナ Inner **W : 128.3 H : 54.9 T : 15.5**

アウタ Outer **W : 136.7 H : 55.0 T : 15.5**

SN905P サファリ SAFARI WFGY61 02.11～

Front

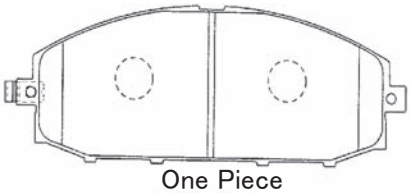

One Piece

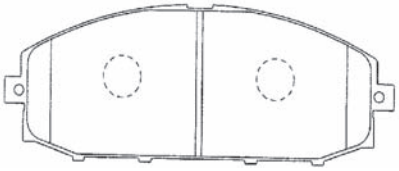

Three Pieces

W : 166.0 H : 61.0 T : 17.0

SN899P エルグランド ELGRAND E51 02.05～

Front

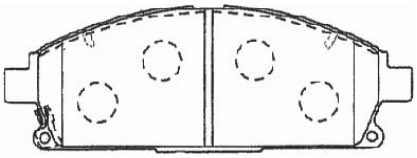

One Piece

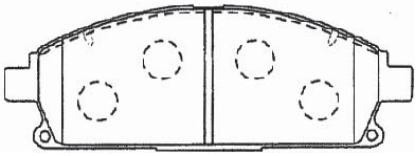

Three Pieces

W : 158.9 H : 56.0 T : 15.0

SN909 エスティマ T/L ESTIMA T/L ACR30W,40W 03.04～ MCR30W,40W 03.04～

Front

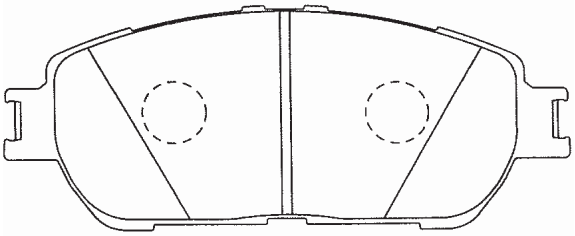

W : 143.5 H : 58.5 T : 15.5

SN902P スパーキー SPARKY S221,231 02.06～

Front

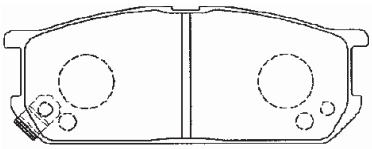

One Piece

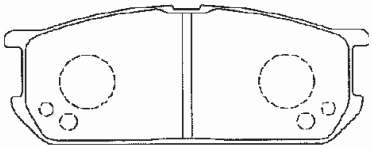

Three Pieces

W : 106.1 H : 41.5 T : 14.0

SN910P

Front	ムーヴ MOVE	L150S,160S	02.10～
	パッソ PASSO	KGC10,15	04.06～

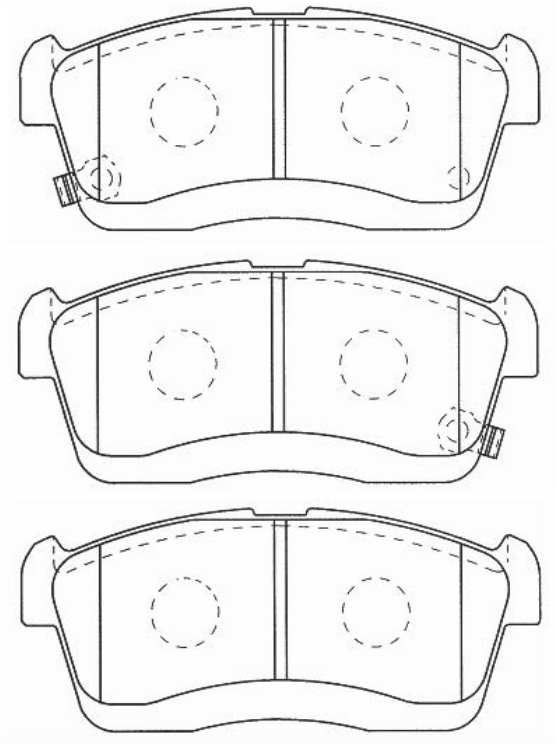

W : 108.5 H : 45.4 T : 14.5

SN913P

Rear	スイフト SWIFT	HT81S	03.06～

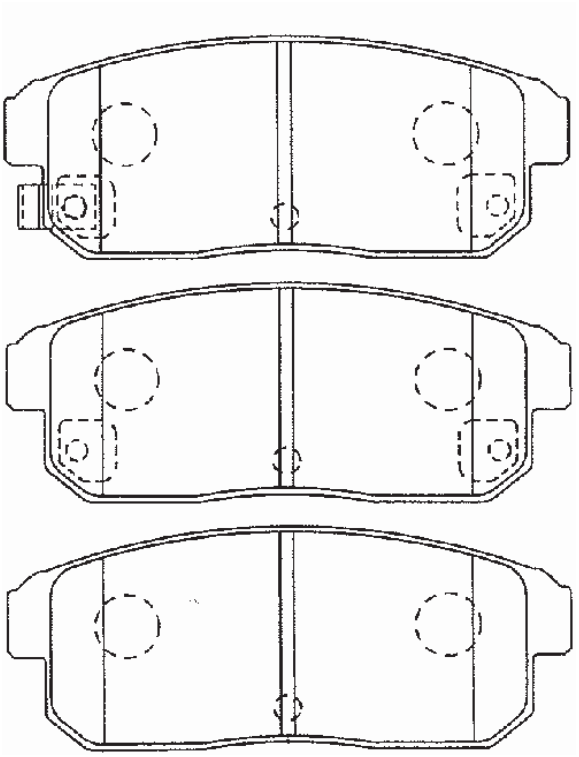

W : 105.5 H : 43.0 T : 14.0

SN918

Front	アクセラ AXELA	BK5P,3P,BKEP	03.09～
	プレマシー PREMACY	CP3W,CPEW	05.02～

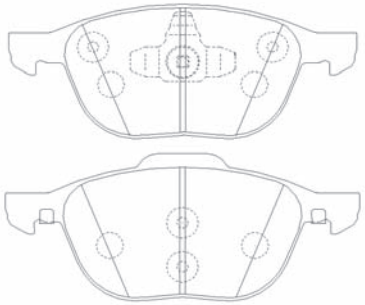

インナー Inner **W : 155.1 H : 61.7 T : 17.3**
アウター Outer **W : 156.4 H : 66.3 T : 17.3**

SN919P

Front	アテンザ ATENZA	GG3S,GYEW	02.05～

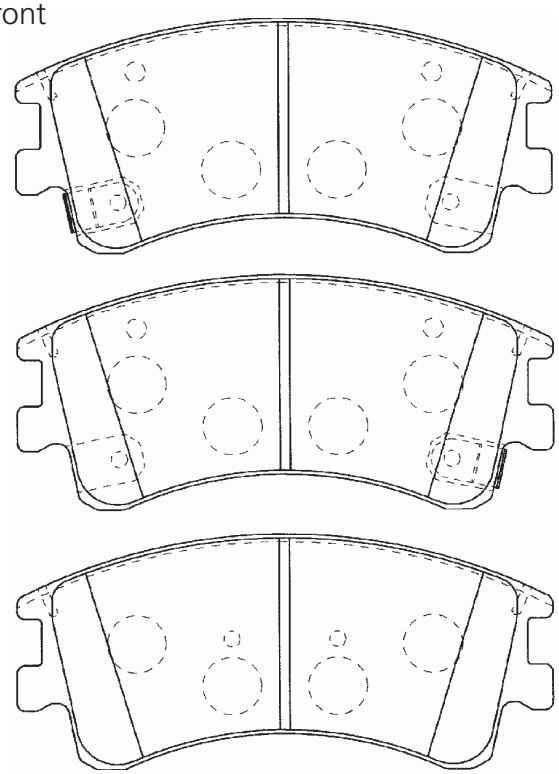

W : 132.0 H : 59.5 T : 18.0

SN932

Front	エルフ ELF	NKR81,85	04.06～
	タイタン TITAN	LKR81,85	04.07～

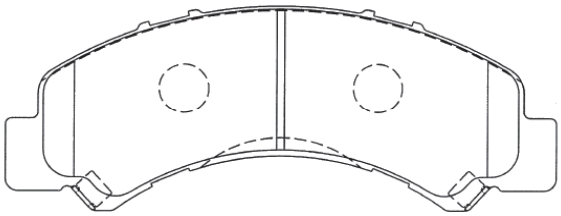

W : 178.4 H : 68.9 T : 21.0

ILLUSTRATION

SN935

アルト、ワゴンR
ALTO/WAGONR

HA24S, MH21S 04.12～

Front

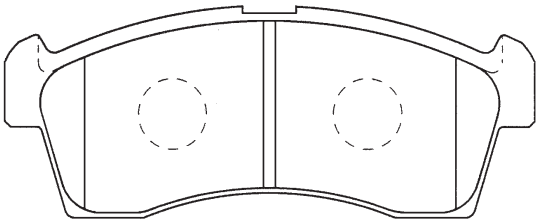

W : 108.5 H : 41.9 T : 14.5

SN938P

ヴィッツ
VITZ

NCP91 05.01～

Rear

ベルタ
BELTA

SCP92 05.11～

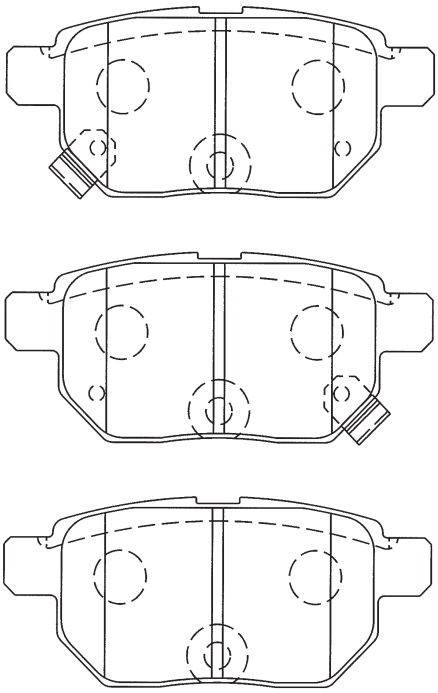

W : 98.5 H : 42.5 T : 15.0

SN939

ヴィッツ(RS)
VITZ(RS)

NCP91 05.01～

Front

ベルタ(VSC付)
BELTA(With VSC)

SCP92 05.11～

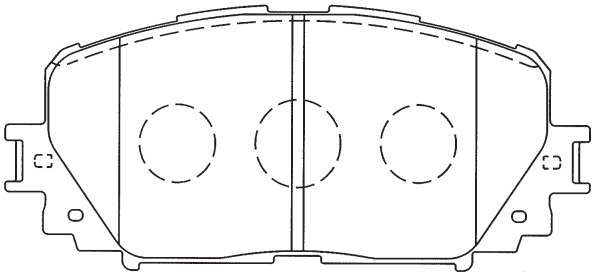

W : 123.7 H : 54.5 T : 17.5

SN943P

パッソ
PASSO

KGC10,15 05.04～

Front

ブーン
BOON

M300S,310S 05.04～

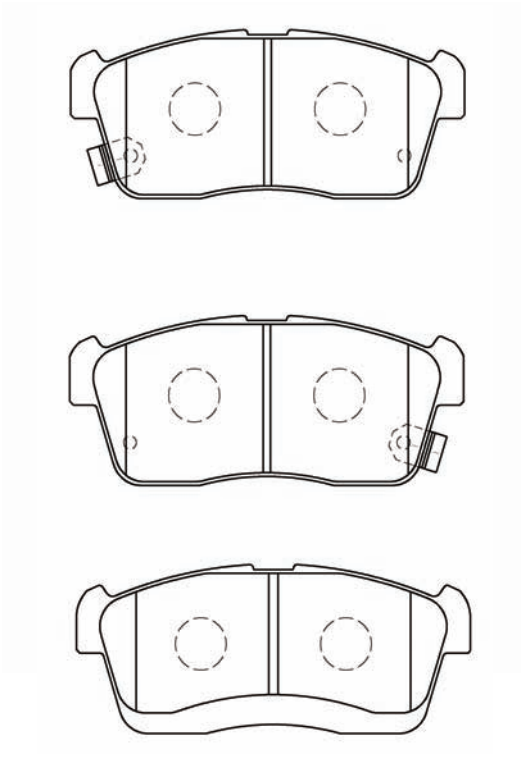

W : 108.5 H : 45.4 T : 15.5

SN946

Front

キャリィ/エブリィ CARRY/EVERY	DA64V,63T,65T	05.08～
エブリィワゴン EVERYWAGON	DA64W	05.08～

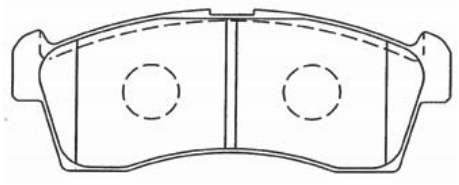

W : 108.5 H : 41.9 T : 14.5

SN949P

Front

bB	QC20,21,25	06.01～
クー QOO	M401S,402S,411	06.05～

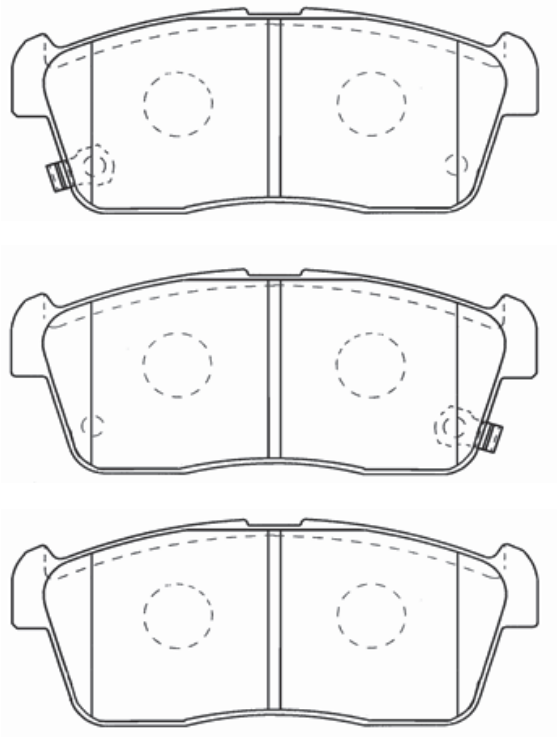

W : 108.5 H : 45.4 T : 15.0

SN952P

Rear

ロードスター ROADSTAR	NB6C,8C(ハードサス)	00.06～

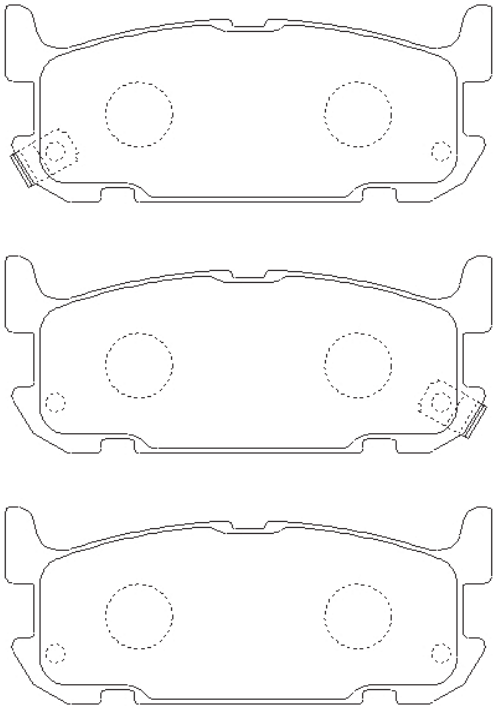

W : 102.0 H : 42.0 T : 12.5

ILLUSTRATION

SN955 タウンエース TOWN ACE S402 08.02～

Front

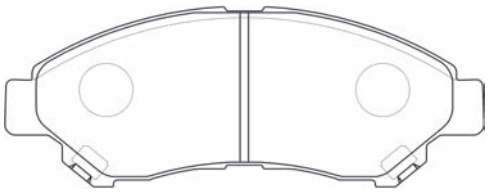

W : 142.0 H : 55.0 T : 15.7

SN956P IQ KGJ10 08.11～

Front

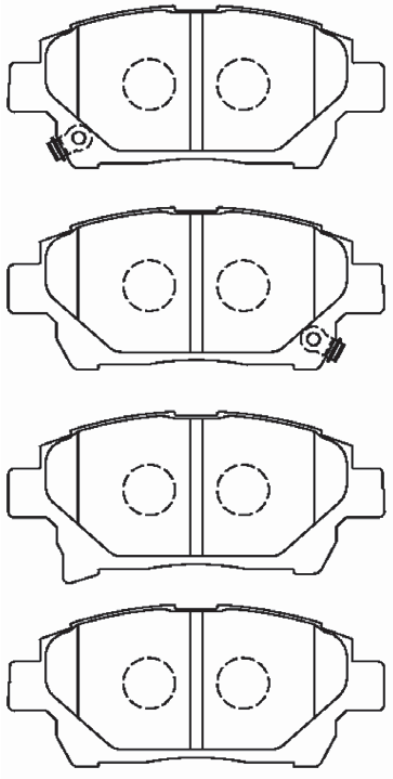

W : 116.5 H : 54.0 T : 16.0

SN957P アトラス ATLAS FZ2F24 07.06～

Front

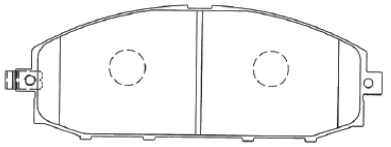

One Piece

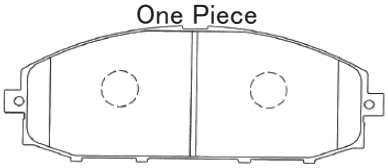

Three Pieces

W : 166.0 H : 61.0 T : 18.0

SN959P バネット NV/VANETTE M20 09.05～

Front

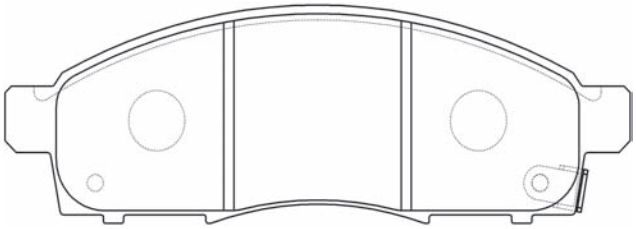

One

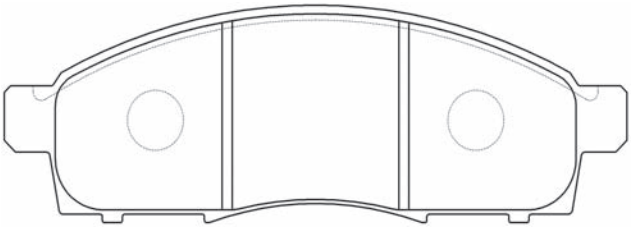

Three Pieces

W : 155.4 H : 51.0 T : 16.6

Cross Reference List

● Multi Disc Pad Makers Products
Cross Reference Number List 228

● Genuine No.→ ADVICS No. 236

Multi Disc Pad Makers Products
Cross Reference Number List

ADVICS	AKEBONO	KASHIYAMA	FUJI	TOKICO
A1N005	AN498WK	D2177M		TN570M
A1N006	AN606K	D2186	AFP-389	TN576
A1N008	AN640	D2202	AFP-455	TN625
A1N009	AN652K	D2212	AFP-456	TN631
A1N011	AN690WK	D2228M	AFP-506S	TN691M
A1N013				
A1N016	AN103K	D2018	AFP-54	TN074
A1N017	AN50K	D2020	AFP-61	TN121
A1N019	AN261K	D2067	AFP-138	TN212
A1N020	AN275K	D2087	AFP-222	TN223
A1N021	AN303WK	D2082M	AFP-340S	TN252M
A1N023	AN336WK	D2094M	AFP-324S	TN248M
A1N025	AN445K	D2154	AFP-288	TN474
A1N026	AN406WK	D2117M	AFP-323S	TN439M
A1N028	AN435WK	D2136M	AFP-291S	TN465M
A1N029	AN458WK	D2160M	AFP-410S	TN523M
A1N034	AN113K	D2023	AFP-156	TN101M
A1N036	AN267K	D2069	AFP-77	TN215
A1N038	AN306K	D2065	AFP-155	TN189
A1N041	AN322K	D2088	AFP-224	TN277
A1N043	AN330K	D2092	AFP-227	TN244
A1N046	AN354K	D2109	AFP-262	TN414
A1N048	AN394WK	D2118M	AFP-267S	TN413M
A1N049	AN333K	D2086	AFP-143	TN253
A1N050	AN334K	D2104	AFP-144	TN291
A1N053	AN374K	D2108	AFP-268	TN418
A1N054	AN368WK	D2110M	AFP-270S	TN533M
A1N055	AN395K	D2129	AFP-287	TN463
A1N056	AN413WK	D2126M	AFP-286S	TN469M
A1N060	AN417WK	D2148M	AFP-530S	TN686M
A1N061	AN118K	D2052	AFP-78	T1290
A1N063	AN271K	D2063	AFP-536	T1216
A1N065	AN603K	D2180	AFP-383	TN573
A1N067	AN618WK	D2174M	AFP-392S	TN585M
A1N068	AN634WK	D2183M	AFP-395S	TN600M
A1N073	AN671K	D2222	AFP-503	TM623
A1N078	AN294WK	D2050M	AFP-266S	TN117M
A1N083	AN293WK	D2077M	AFP-158S	T1251M
A1N085	AN379WK	D2106M	AFP-269S	TN422M
A1N092	AN407WK	D2142M	AFP-408S	TN458M
A1N093	AN408WK	D2138M	AFP-346S	TN459M
A1N096	AN469WK	D2150M	AFP-431S	TN540M
A1N097	AN465WK	D2166	AFP-360	TN527
A1N100	AN410WK	D2140M	AFP-531S	TN685M
A1N101	AN638WK	D2197	AFP-442	TN552
A1N102	A-SM627WK	D2207M		TN684M
A1N103	AN658	D2218	AFP-451	TN608
A1N105	AN667WK	D2217	AFP-476	TN616
A1N106	AN670K	D2223	AFP-495	TN624
A1N110	AN687WK	D2249	AFP-543	TN643
A1N115	AN671K			
A1N119	AN707K	D2251		TN680
A1N128	AN742K	D2274		TN707
A1N129	AN732K	D2268		TN690
A1N139	AN735WK	D2265		TN688
A1N140	AN636K	D2242	AFP-509	TN666
A1N144	AN498WK	D2177M		TN570M

ADVICS	AKEBONO	KASHIYAMA	FUJI	TOKICO
A1N154	AN734K	D2270		TN689
A1N155	AN714K	D2252	AFP-538	TN670
A1N156	AN755W	D2278M		
A1N166	AN731WK	D2266M		TN725M
A1N190	AN708WK	D2233M		TN699M
A1N191		D2316-02		
A1N192	AN714K	D2315-02		
A1N197		D0051M		TN721M
A1N199				
A1N241	AN708WK	D2233M		TN699M
A1N249	AN247K	D2064		TN550
A2N004	AN499K	D2179	AFP-379	TN571
A2N007	AN635WK	D2204M	AFP-441S	TN653M
A2N010	AN653K	D2213	AFP-457	TN632
A2N012	AN337K	D2090	AFP-325	TN257
A2N027	AN436WK	D2146M	AFP-292S	TN494M
A2N030	AN467K	D2163	AFP-356	TN528
A2N031	AN484WK	D2188M	AFP-373S	TN564M
A2N040	AN254K	D2066	AFP-118	TN193
A2N042	AN323K	D2089	AFP-225	TN278
A2N044	AN321WK	D2099M	AFP-250S	TN593M
A2N047	AN340K	D2105	AFP-333	TN407
A2N057	AN403WK	D2131M	AFP-285S	TN435M
A2N058	AN396K	D2123	AFP-289	TN453
A2N059	AN398WK	D2125M		TN445M
A2N066	AN604K	D2187	AFP-384	TN589
A2N069	AN639WK	D2198M	AFP-443S	TN606M
A2N076	AN126K	D2028	AFP-91	T1124
A2N080	AN353K	D2062	AFP-123	TN271
A2N081	AN222WK	D2053M	AFP-124S	TN176M
A2N084	AN369WK	D2112M	AFP-226S	TN445M
A2N094	AN438WK	D2114M	AFP-242S	TN430M
A2N095	AN464WK	D2165M	AFP-327S	TN560M
A2N099	AN489WK	D2173M	AFP-370S	TN562M
A2N104	AN659K	D2219	AFP-452	TN614
A2N111	AN688WK	D2250	AFP-544	TN694
A2N118	AN699W	D2243M	AFP-510S	TN700M
A2N130	AN733K	D2269		TN713
A2N159	AN756	D2281		
A2N191	AN709WK	D2239M		TN702M
A2N194	AN765K	D2326		
A2N196	AN716WK	D2323M		
★A2N226	AN-765K	D2329		TN790
★A2N228	AN-797K	D2344	AFP-628	
A2N232	AN716WK	D2254M		TN687M
A2N245	AN709WK	D2239M	AFP-508S	TN702M
B1N002	AN619WK	D1131M	AFP-139S	TN588M
B1N003	AN127K	D1025	AFP-76	TN115
B1N004	AN130WK	D1031M	AFP-132S	TN115M
B1N006	AN301WK,AN430WK	D1131M,D1199M	AFP-139S	TN230M,TN493M
B1N009	AN107WK	D1035M	AFP-99S	TN086M
B1N010	AN212WK	D1063M		TN163M
B1N011	AN212WK	D1063M	AFP-109S	TN163M
B1N017	AN327WK	D1133M	AFP-148S	TN242M
B1N018	AN277WK	D1116M	AFP-161S	TN218M
B1N019	AN286WK	D1110M	AFP-163S	TN529M
B1N020	AN262WK	D1092M	AFP-135S,AFP-229S	TN213M

★Planed to sell in FY2020

ADVICS	AKEBONO	KASHIYAMA	FUJI	TOKICO
B1N021	AN319WK	D1142M	AFP-230S	TN241M
B1N023	AN382WK	D1173M	AFP-263S	TN423M
B1N028	AN372WK	D1165M	AFP-264	TN401M
B1N031	AN483WK	D1220M	AFP-519S	T1269
B1N034	AN488WK	D1218M		TN561M
B1N036	AN605WK	D1231M	AFP-385S	TN567M
B1N037	AN614WK	D1233M	AFP-390S	TN566M
B1N039	AN279WK	D1119M		TN568M
B1N062	AN450WK	D1211M	AFP-355S	TN525M
B1N077	AN726WK	D1267M		TN676M
B1N079	AN711WK	D1264M		TN675M
B1N093	AN761WK	D1288M		TN729M
B1N094	AN751WK	D1276		TN726
B1N108	AN749WK	D1282M		
B1N109	AN722WK	D1300M		
B1N234	AN675WK	D1250M		TN634M
B1N235	AN665WK	D1253M	AFP-475S	TN640M
B1N237	AN431WK	D1202M		TN429M
★B1N248	AN-793WK	D1339	AFP-618	TN800
B2N022	AN346WK	D1148M	AFP-231S	TN243M
B2N026	AN392WK	D1181M	AFP-402S	TN432M
B2N029	AN432WK	D1205M	AFP-342S	TN478M
B2N040	AN669WK	D1239M	AFP-470S	TN618M
B2N045	AN280WK	D1047M	AFP-110S	TN236M
B2N050	AN266WK	D1102M	AFP-334S	TN272M
B2N053	AN302WK	D1124M	AFP-140S	TN231M
B2N056	AN349WK	D1145M	AFP-260S	TN406M
B2N057	AN373WK	D1167M	AFP-265S	TN417M
B2N064	AN654WK	D1244M	AFP-473S	TN647M
B2N095	AN745WK	D1244M		TN714M
B2N096	AN768WK	D1286M		
B2N099	AN750WK	D1284M		
C1N004	AN111K	D5011	AFP-66	TN089
C1N013	AN230WK,AN274WK	D5027M,D5050M	AFP-180S	TN224M
C1N016	AN376WK	D5070M	AFP-228	TN419M
C1N018	AN358WK	D5060M	AFP-190S	TN266M
C1N020	AN377WK	D5073M	AFP-278S	TN420M
C1N024	AN419WK	D5088M	AFP-328S	TN446M
C1N026	AN613WK	D5100M	AFP-391S	TN587M
C1N030	AN668WK	D5113M	AFP-459S	TN611M
C1N031	AN663WK	D5128M	AFP-493S	TN629M
C1N033	AN211WK	D5022M	AFP-127S	TN167M
C1N034	AN455WK	D5080M	AFP-317S	TN447M
C1N035	AN455WK	D5091M	AFP-317S	TN496M
C1N037	AN662WK	D5116M	AFP-350S	TN654M
C1N041	AN685WK	D5174M	AFP-596S	TN717M
C1N042	AN629WK	D1211M		TN525M
C1N044	AN720WK	D5142M		TN703M
C1N048	AN743WK	D5153M		TN716M
C1N077	AN763WK	D5168M		
C1N083				
C1N085				
C1N132	AN685WK	D5070M		TN717M
C2N022	AN411WK	D5042M	AFP-313S	TN444M
C2N061	AN684WK	D5066M		TN710M
★C2N139	AN-802WK	D5226M		TN810M
D1N003	AN493K	D6085	AFP-375	TN565

★Planed to sell in FY2020

ADVICS	AKEBONO	KASHIYAMA	FUJI	TOKICO
D1N004	AN641K	D6109	AFP-449	TN612
D1N005	AN701K	D6113		TN659
D1N006	AN700K	D6115		TN660
D1N011	AN317K	D6070	AFP-192	TN274
D1N013	AN317K	D6066	AFP-310	TN443
D1N014	AN318K	D6070	AFP-300	TN274
D1N019	AN623K	D6083	AFP-420	TN497
D1N020	AN476K	D6091		TN530
D1N021	AN486K	D6089	AFP-364	TN542
D1N033	AN233WK	D6018M	AFP-151S	TN197M
D1N034	AN313WK	D6039M	AFP-191S	TN245M
D1N035	AN312WK	D6043M	AFP-193	TN238M
D1N038	AN425K	D6071	AFP-464	TN509
D1N039	AN300WK	D6027M	AFP-460S	TN449M
D1N042	AN433WK	D6081	AFP-339	TN514
D1N045	AN487WK	D6097	AFP-374	TN558
D1N046	AN608WK	D6100	AFP-434	TN579
D1N048	AN650WK	D6108	AFP-479	TN615
D1N050	AN660WK	D6121		TN642
D1N054	AN682K	D6118		TN682
D1N075	AN-610K	D9027		TN569
D1N078				
D1N081	AN779WK	D6157M-02		
★D1N082	AN-770K	D6131	AFP-632	TN758
D1N083	AN775WK	D6137M		
D1N084	AN774WK	D6139M		
★D1N088	AN-780WK	D6144M		TN770M
★D1N089	AN-781WK	D6149M		TN786M
D2N012	AN400WK	D6073M	AFP-417S	TN503M
D2N022	AN468WK	D6086M	AFP-358S	TN580M
D2N028	AN128K	D6012	AFP-86	TN127
D2N032	AN224WK	D6024M	AFP-254S	TN199M
D2N036	AN348WK	D6049M	AFP-256S	TN280M
D2N037	AN366WK	D6054M	AFP-324S	TN267M
D2N040	AN380WK	D6067M	AFP-299S	TN441M
D2N049	AN651W	D6124	AFP-474	TN639
D2N074	AN738WK			
D2N097	AN632WK	D6106		TN577
E1N003	AN602K	D3109	AFP-382	TN572
E1N004	AN631K	D3110	AFP-524	TN518
E1N006	AN693K	D3130		TN655
E1N008	AN133K	D3025	AFP-85	TN128
E1N009	AN133WK	D3047M	AFP-223S	TN190M
E1N011	AN218WK	D3060	AFP-200	TN451
E1N014	AN298WK	D3062M	AFP-146S	TN237M
E1N015	AN324K	D3061	AFP-186	TN276
E1N016	AN338WK	D3066M	AFP-187S	TN531M
E1N018	AN328WK	D3069M	AFP-354S	TN519M
E1N019	AN418WK	D3077M	AFP-293S	TN470M
E1N021	AN452K	D3099	AFP-349	TN518
E1N022	AN461K	D3093	AFP-294	TN464
E1N026	AN383WK,AN447WK	D3084M	AFP-274S	TN511M,TN544M
E1N035	AN249WK	D3053M	AFP-244S	TN210M
E1N038	AN423K	D3098	AFP-353	TN468
E1N042	AN494WK	D3101M	AFP-368S	TN566
E1N053	AN736K	D3142		
E1N054	AN646K	D3116		TN704

★Planed to sell in FY2020

ADVICS	AKEBONO	KASHIYAMA	FUJI	TOKICO
E1N066	AN681K	D3114		
E1N068	AN746WK	D3138M		
E1N071	AN759WK	D3146M		
E1N080	AN753W	D3144M-02		TN719M
★E1N085	AN-783WK	D3155		TN763
★E1N107	AN-804WK	D3170	AFP-624	TN793M
★E1N108	AN-791WK	D3163M	AFP-619S	TN795M
E2N029	AN421K	D3097	AFP-413	TN467
E2N030	AN466WK	D3094M	AFP-295S	TN475M
E2N032	AN209K	D3031	AFP-243	TN157
E2N033	AN219K	D3027	AFP-83	TN170
E2N043	AN645K	D3111	AFP-483	TN553
E2N048	AN704WK	D3131		TN672
E2N065	AN718K	D3132		
E2N067	AN747K	D3141		TN723
★E2N086	AN-786WK	D6146M	AFP-629S	TN769M
★E2N088	AN-784WK	D3156	AFP-621	TN771M
★E2N109	AN-792WK	D3166M		TN820M
F1N003	AN335K	D7026	AFP-257	TN294
F1N005	AN612K	D7047	AFP-435	TN578
F1N008	AN147WK	D7011M		TN152M
F1N011	AN296WK	D7017M	AFP-169S	TN262M
F1N013	AN463WK	D7036	AFP-361	TN539
F1N014	AN462WK	D7039M	AFP-363	TN538
F1N018	AN672WK	D7055M		TN604M
F1N019	AN703WK	D7060M	AFP-498S	TN646M
F1N020	AN691WK	D7058		TN668
F1N042	AN672WK	D7055M		TN604M
F2N012	AN297WK	D7020M	AFP-170S	TN263M
F2N015	AN475WK	D7042M	AFP-366	TN559
F2N016	AN692WK	D7059		TN679
F2N022	AN696WK	D7064M		TN648M
F2N037	AN766WK	D7070M		
★F2N044		D7078M	AFP-604S	TN803M
G1N005	AN478K	D0037		TN607
G1N006	AN661WK	D9029M	AFP-450S	TN574M
G1N011	AN444WK	D0030M	AFP-429S	TN487M
G1N015	AN389K	D0026	AFP-428	TN405
G1N017	AN414WK	D0027M	AFP-365S	TN663M
G1N018	AN496WK	D0034	AFP-387	TN575
G1N019	AN345K	D0015	AFP-196	TN192
G2N010	AN307K	D0021	AFP-197	TN281
H1N001	AN451K	D9024	AFP-424	TN500
H1N005	AN282K	D9013	AFP-175	TN222
H1N006	AN305K	D9017	AFP-173	TN504
H1N008	AN448K	D9023	AFP-336	TN477
H1N009	AN610K	D9027	AFP-436	TN569
H1N011	AN129K	D9000	AFP-89	TN129
H1N014	AN283K	D9016	AFP-172	TN227
H1N016	AN449K	D9025	AFP-357	TN501
H1N020	AN477K	D9026	AFP-362	TN543
H1N025	AN-706WK	D9039M		TN701M
H1N040	AN723K	D9044		TN708
H1N041	AN673WK	D1241M		TN706M
H1N052	AN769WK	D9061M		TN742M
H1N053	AN769WK	D9061M		
H1N058				

★Planed to sell in FY2020

ADVICS	AKEBONO	KASHIYAMA	FUJI	TOKICO
H1N059	AN-370WK	D9019M		TN416M
H2N046	AN773WK	D9066M		
J1N008	AN386WK	D4031M	AFP-338S	TN517M
J1N010	AN248WK	D4029M	AFP-337S	TN516M
J1N018	AN-617WK	D4052		TN650
J2N009	AN387WK	D4034M	AFP-347S	TN452M
J2N016	AN387WK	D4045M		TN452M
SN103P	AN609WK	D0038M	AFP-437S	TN592M
SN109P	AN615WK	D7037M	AFP-423S	TN547M
SN110	AN644K	D5183-02		
SN116	AN637K	D3112		TN669
SN118	AN700K	D1274		
SN124P	AN697WK	D5134M		TN667M
SN127	AN712K	D6127		TN612
SN130P	AN713WK	D2257M		TN678M
SN137	AN748K	D2276		TN730
SN145P	AN609WK	D0038M		TN592M
SN218P	AN31K	D2024	AFP-116	T1075
SN219	AN77K	D2011	AFP-38	TN053
SN230	AN96K	D4001	AFP-65	TN141
SN233	AN216K	D0004	AFP-93	TN143
SN238	AN353K	D2042	AFP-94	TN271
SN240P	AN208WK	D3028M	AFP-114S	TN156M
SN241	AN206K	D4010	AFP-179	TN162
SN244E	AN426K	D6060	AFP-462	TN427
SN244P	AN363WK	D6030M	AFP-461S	TN448M
SN245	AN241K	D3043	AFP-133,AFP-141	TN232
SN257	AN289K	D6038	AFP-166	TN256
SN271	AN347K	D4025	AFP-275	TN282
SN272	AN343K	D3082	AFP-351	TN498
SN274P	AN351WK	D2096M	AFP-326S	TN492M
SN279	AN364K	D6033	AFP-142	TN450
SN279E	AN427K	D6062	AFP-463,AFP-377	TN428
SN280E	AN428K	D6064		TN491
SN280P	AN393WK	D6057M	AFP-416S	TN520M
SN281P	AN633K	D3088	AFP-412	TN551
SN284P	AN443K	D0017	AFP-425	TN486
SN410P	AN264WK	D5039M	AFP-184S	TN166M
SN414	AN332K	D5034	AFP-125,AFP-241	TN239
SN418P	AN308WK	D5053M	AFP-182S	TN254M
SN422	AN331K	D5034	AFP-240	TN286
SN424P	AN378WK	D5019M	AFP-277S	TN421M,TN665M
SN428P	AN375WK	D5077M	AFP-279S	TN436M
SN430P	AN491WK	D5094M		TN563M
SN432P	AN378WK	D5110M		TN658M,TN665M
SN433P	AN694WK	D9037M		TN693M
SN434P	AN757WK	D5119M	AFP-397S	TN596M
SN435P	AN668WK	D5122M	AFP-512S	TN657M
SN436P	AN698WK	D5137M	AFP-550S	TN671M
SN439P	AN724WK	D5144M-02		TN711M
SN441P	AN728W	D7066M	AFP-554S	TN677M
SN443P	AN668WK	D5113M		TN611M
SN502P	AN753WK	D3144M		TN719M
SN505P	AN745WK	D1244M		TN714M
SN535P	AN245WK	D9005M	AFP-258S	
SN538P	AN120WK	D1055M	AFP-108S	TN114M
SN539	AN390K	D1073	AFP-57	TN484

ADVICS	AKEBONO	KASHIYAMA	FUJI	TOKICO
SN539P	AN390K	D1163M,D1209M	AFP-345S	TN532M
SN566	AN391K	D1177	AFP-311	TN483
SN569P	AN416WK	D5083M	AFP-330S	TN440M
SN571P	AN402WK	D1188M	AFP-316S	TN434M
SN574	AN288K	D1121	AFP-164	TN609
SN575P	AN439WK	D1194M	AFP-352P	TN522M
SN580P	AN327WK	D1133M	AFP-148S	TN242M
SN582P	AN600WK	D1236M	AFP-394S	TN548M
SN585P	AN471W	D1208M	AFP-432S	TN242M
SN586	AN737K	D3143		
SN590P	AN479WK	D1215M	AFP-393S	TN545M
SN596P	AN689WK,AN673WK	D1241M	AFP-505S,AFP-502S	TN617M,TN641M
SN599P	AN680WK	D3122M	AFP-491S	TN645M
SN623P	AN243WK	D0008M,D0018	AFP-199S	TN203M,TN524
SN625P	AN342K	D0011	AFP-195	TN204
SN627	AN281K	D9014	AFP-176	TN226
SN641	AN355K	D2102	AFP-261	TN415
SN648P	AN420WK	D2114M	AFP-242S	TN430M
SN649	AN388K	D9022	AFP-282	TN490
SN650	AN269K	D2081	AFP-160	TN636H
SN652P	AN284K	D9015	AFP-174	TN285
SN654	AN365K	D6052	AFP-280	TN403
SN656	AN384K	D3083	AFP-273	TN409
SN657P	AN344WK	D3079M	AFP-272S	TN425M
SN658	AN412K	D7031	AFP-386	TN431
SN666P	AN437K	D2145	AFP-335	TN495
SN670	AN472K	D6084	AFP-421	TN499
SN674	AN621K	D9028		TN586
SN676P	AN620WK	D0041M	AFP-439S	TN594M
SN680	AN636K	D2193	AFP-444	TN603
SN681	AN674WK	D7049M	AFP-466S	TN621M
SN681P	AN674WK	D7049M	AFP-466S	TN621M
SN682P	AN648WK	D4049M	AFP-488S	TN649M
SN684P	AN679WK	D9035M	AFP-497S	TN613M
SN693	AN705K	D9027		TN661
SN720	AN201K	D6017	AFP-150	TN093
SN721	AN88K	D1012	AFP-44	T1080
SN721P	AN88WK	D1028M	AFP-95S	TN060M
SN732	AN97K	D6014	AFP-59	T1135
SN735	AN102K	D2021	AFP-64	TN091
SN751	AN138K	D6011	AFP-90	TN144
SN760P	AN213WK,AN272WK	D1066M	AFP-107S	TN235M
SN763P	AN226WK	D2060M	AFP-122S	TN177M
SN766	AN253K	D7013	AFP-154	TN200
SN774P	AN223WK	D6021M		T1198M
SN783P	AN252WK	D1084M	AFP-131S	TN214M
SN785	AN250K	D3056	AFP-245,AFP-341	TN207,TN534
SN790P	AN226WK	D2070M	AFP-122S	TN225M
SN791	AN276K	D1095	AFP-314	TN489
SN792P	AN326WK	D1139M	AFP-149S	TN287M
SN794P	AN295WK	D7014M	AFP-168S	TN261M
SN798P	AN325WK	D1136M	AFP-147S	TN273M
SN803P	AN350WK	D1151M	AFP-232S	TN246M
SN813P	AN381WK	D1170M	AFP-401S	TN515M
SN823	AN217K	D2059	AFP-533	TN172
SN825P	AN238WK	D2075M	AFP-157S	TN635M
SN826P	AN404WK	D2134M	AFP-322S	TN437M

ADVICS	AKEBONO	KASHIYAMA	FUJI	TOKICO
SN827P	AN405WK	D2121M	AFP-284S	TN438M
SN831	AN311K	D1080		TN289
SN835	AN446K	D0033	AFP-430	TN663M
SN836P	AN429WK	D4041	AFP-486	TN506
SN838P	AN339WK	D4026M	AFP-276S	TN402M
SN839P	AN441WK	D1200M	AFP-313S	TN489M
SN841P	AN361WK	D4037M	AFP-485S	TN424M
SN842P	AN442WK	D6079M	AFP-419S	TN510M
SN843	AN434K	D6078		TN488
SN847	AN424K	D3100	AFP-414	TN425
SN848P	AN454WK	D3089M	AFP-343S	TN461M
SN851P	AN470WK	D2164M	AFP-411S	TN541M
SN853P	AN440WK	D1197M	AFP-321S	TN481M
SN858P	AN360WK	D4018M	AFP-321S,AFP-484S	TN549M
SN861	AN460K	D0021		TN281
SN865		D3065		
SN876	AN616K	D6103	AFP-445	TN591
SN881	AN617WK	D1243		TN650
SN882	AN607WK	D6100		TN579
SN886P	AN386WK	D4042M		TN517M
SN888	AN485WK	D4048		TN557
SN893	AN678WK	D2232	AFP-494	TN628
SN897P	AN722WK	D2201M	AFP-482P	TN674M
SN898P	AN675WK	D1250M	AFP-471S	TN634M
SN899P	AN677WK	D1248M	AFP-472S	TN652M
SN900P	AN665WK	D1253M	AFP-475S	TN640M
SN901	AN686K	D3120	AFP-499	TN696
SN902P	AN741WK	D0048M		TN644M
SN904	AN656WK	D4053	AFP-490	TN651
SN905P		D1258M		
SN909	AN670K	D2223		TN624
SN910P	AN683WK	D0045M	AFP-501S	TN664M
SN913P	AN694WK	D9037M		TN693M
SN918	AN717K	D3128	AFP-546	TN682
SN919P	AN719WK	D3125M	AFP-496S	TN656M
SN932	AN721WK	D4054		TN718
SN935	AN727K	D9041	AFP-555	TN673
SN938P	AN716WK	D2254M	AFP-542	TN687M
SN939	AN715K	D2253	AFP-539S	TN683
SN943P	AN683WK	D0045M		TN638M
SN946	AN727K	D9041		TN673
SN949P	AN661WK	D9029M		TN574M
SN952P	AN647WK	D3117M	AFP-458S	TN692M
SN955	AN758WK	D2282		TN731
SN956P		D2283M		TN600M
SN957P	AN752W	D1275M		
SN959P	AN767WK	D1294M		
SX199,SX299	A-SM474K	D2169		TX536

[Brake Pad] Cross Reference List / Genuine No. → ADVICS No.

TOYOTA

Genuine No.	ADVICS No.
04465-02020	**A1N048**
04465-02070	**A1N105**
04465-02080	**A1N105**
04465-02130	**A1N199**
04465-02220	**A1N128**
04465-02240	**A1N128**
04465-04010	**A1N029**
04465-04030	**A1N029**
04465-04070	**A1N011**
04465-05010	**A1N048**
04465-05131	**SN933P**
04465-05150	**SN933P**
04465-05170	**SN933P**
04465-05210	**SN933P**
04465-05220	**SN933P**
04465-05221	**SN933P**
04465-05280	**SN933P**
04465-06020	**A1N041**
04465-08030	**A1N115**
04465-0B030	**A1N096**
04465-0C011	**A1N013**
04465-0C012	**A1N013**
04465-10020	**A1N043**
04465-10040	**A1N034**
04465-10041	**A1N034**
04465-10070	**A1N043**
04465-12010	**A1N034**
04465-12020	**A1N034**
04465-12030	**A1N034**
04465-12040	**A1N034**
04465-12070	**A1N034**
04465-12090	**A1N034**
04465-12110	**A1N048**
04465-12140	**A1N034**
04465-12160	**A1N053**
04465-12220	**A1N034**
04465-12240	**A1N034**
04465-12250	**A1N034**
04465-12370	**SN735**
04465-12470	**SN735**
04465-12490	**A1N034**
04465-12500	**A1N048**
04465-12510	**A1N034**
04465-12530	**A1N048**
04465-12540	**A1N048**
04465-12550	**A1N034**
04465-12580	**A1N068**
04465-12581	**A1N068**
04465-12590	**A1N068**
04465-12591	**A1N068**

Genuine No.	ADVICS No.
04465-12592	**A1N068**
04465-12640	**A1N155**
04465-13010	**A1N034**
04465-13030	**A1N065**
04465-13040	**A1N068**
04465-13041	**A1N068**
04465-13060	**A1N065**
04465-14010	**SN735**
04465-14020	**SN790P**
04465-14030	**SN790P**
04465-14060	**SN825P**
04465-14061	**SN825P**
04465-14080	**A1N056**
04465-14081	**A1N056**
04465-14100	**SN763P**
04465-14110	**SN790P**
04465-14120	**SN763P**
04465-14140	**SN790P**
04465-14150	**A1N028**
04465-14180	**SN790P**
04465-14210	**SN735**
04465-14340	**SN790P**
04465-14350	**SN735**
04465-14360	**SN790P**
04465-14370	**SN790P**
04465-14390	**A1N028**
04465-16020	**A1N034**
04465-16030	**A1N034**
04465-16031	**A1N034**
04465-16040	**A1N034**
04465-16060	**A1N034**
04465-16070	**A1N034**
04465-16120	**A1N034**
04465-17020	**A1N034**
04465-17021	**A1N034**
04465-17040	**A1N034**
04465-17050	**A1N053**
04465-17070	**A1N034**
04465-17080	**A1N034**
04465-17090	**A1N034**
04465-17100	**A1N068**
04465-17101	**A1N068**
04465-17140	**A1N068**
04465-1A010	**A1N065**
04465-20020	**A1N034**
04465-20030	**A1N034**
04465-20040	**A1N038**
04465-20050	**A1N038**
04465-20060	**A1N034**
04465-20070	**A1N034**

Genuine No.	ADVICS No.
04465-20071	**A1N034**
04465-20080	**A1N034**
04465-20090	**A1N038**
04465-20100	**A1N028**
04465-20110	**A1N048**
04465-20120	**A1N048**
04465-20130	**A1N048**
04465-20140	**A1N048**
04465-20150	**A1N038**
04465-20160	**A1N034**
04465-20170	**A1N038**
04465-20180	**A1N034**
04465-20200	**A1N038**
04465-20210	**A1N038**
04465-20220	**A1N038**
04465-20230	**SN666P**
04465-20250	**SN666P**
04465-20260	**A1N041**
04465-20300	**A1N034**
04465-20310	**A1N038**
04465-20450	**A1N048**
04465-20470	**A1N053**
04465-20480	**A1N068**
04465-20490	**A1N048**
04465-20500	**A1N065**
04465-20540	**A1N065**
04465-20570	**A1N065**
04465-20600	**A1N028**
04465-21010	**A1N034**
04465-21020	**A1N106**
04465-21030	**A1N065**
04465-21040	**A1N034**
04465-22010	**A1N016**
04465-22020	**A1N016**
04465-22030	**A1N016**
04465-22040	**A1N020**
04465-22051	**A1N092**
04465-22060	**A1N020**
04465-22070	**A1N016**
04465-22080	**A1N016**
04465-22090	**A1N020**
04465-22110	**A1N020**
04465-22120	**A1N016**
04465-22130	**A1N016**
04465-22140	**A1N016**
04465-22180	**A1N020**
04465-22190	**A1N016**
04465-22210	**A1N016**
04465-22220	**A1N020**
04465-22230	**A1N020**

Genuine No.	ADVICS No.
04465-22240	**A1N020**
04465-22280	**A1N048**
04465-22290	**A1N016**
04465-22300	**A1N006**
04465-22310	**A1N056**
04465-22311	**A1N056**
04465-22312	**A1N056**
04465-22312-79	**A1N056**
04465-24010	**A1N041**
04465-24020	**A1N054**
04465-24021	**A1N054**
04465-24030	**SN790P**
04465-24040	**A1N041**
04465-25010	**SN823**
04465-25020	**SN650**
04465-25030	**SN650**
04465-25040	**A1N249**
04465-25060	**A1N249**
04465-25070	**SN823**
04465-25080	**SN650**
04465-26020	**A1N063**
04465-26030	**A1N049**
04465-26040	**A1N049**
04465-26050	**A1N049**
04465-26051	**A1N049**
04465-26090	**A1N249**
04465-26100	**A1N249**
04465-26130	**A1N050**
04465-26140	**A1N063**
04465-26160	**A1N050**
04465-26170	**A1N249**
04465-26200	**A1N063**
04465-26210	**A1N036**
04465-26250	**A1N249**
04465-26260	**A1N249**
04465-26280	**A1N036**
04465-26300	**A1N050**
04465-26301	**A1N050**
04465-26310	**A1N050**
04465-26320	**A1N050**
04465-26370	**A1N050**
04465-26420	**A1N119**
04465-26421	**A1N119**
04465-27010	**A1N078**
04465-27030	**A1N078**
04465-27040	**SN825P**
04465-27120	**SN897P**
04465-28020	**A1N078**
04465-28030	**A1N085**
04465-28040	**A1N085**

Genuine No.	ADVICS No.
04465-28050	**A1N083**
04465-28080	**A1N085**
04465-28150	**A1N092**
04465-28151	**A1N092**
04465-28160	**A1N093**
04465-28170	**A1N093**
04465-28171	**A1N093**
04465-28180	**SN827P**
04465-28190	**SN826P**
04465-28200	**A1N078**
04465-28220	**SN827P**
04465-28270	**A1N083**
04465-28300	**A1N078**
04465-28330	**A1N083**
04465-28340	**A1N096**
04465-28350	**A1N096**
04465-28360	**SN851P**
04465-28370	**A1N096**
04465-28370-000	**SN827P**
04465-28380	**A1N096**
04465-28381	**A1N096**
04465-28390	**SN851P**
04465-28400	**A1N101**
04465-28410	**A1N101**
04465-28420	**A1N096**
04465-28430	**A1N101**
04465-28510	**SN909**
04465-28520	**A1N139**
04465-2B010	**A1N065**
04465-2B030	**A1N065**
04465-2B040	**A1N065**
04465-30020	**SN219**
04465-30021	**SN219**
04465-30030	**A1N019**
04465-30050	**A1N019**
04465-30070	**SN790P**
04465-30080	**A1N041**
04465-30100	**A1N019**
04465-30110	**A1N056**
04465-30120	**A1N054**
04465-30130	**SN219**
04465-30140	**SN219**
04465-30150	**SN219**
04465-30160	**SN219**
04465-30170	**A1N019**
04465-30230	**A1N056**
04465-30231	**A1N056**
04465-30240	**A1N048**
04465-30270	**A1N056**
04465-30271	**A1N056**

Genuine No.	ADVICS No.
04465-30272	**A1N056**
04465-30280	**SN680**
04465-30300	**SN680**
04465-30310	**A1N056**
04465-30320	**A1N056**
04465-30330	**A1N140**
04465-30340	**A1N073**
04465-30350	**SN680**
04465-30400	**A1N166**
04465-30400-79	**A1N166**
04465-30410	**A1N166**
04465-30410-79	**A1N166**
04465-30430	**A1N166**
04465-32020	**A1N034**
04465-32021	**A1N034**
04465-32040	**A1N038**
04465-32050	**A1N038**
04465-32060	**A1N038**
04465-32070	**A1N038**
04465-32080	**SN641**
04465-32081	**SN641**
04465-32090	**A1N038**
04465-32091	**A1N038**
04465-32110	**A1N038**
04465-32120	**A1N046**
04465-32121	**A1N046**
04465-32130	**SN641**
04465-32140	**A1N046**
04465-32150	**A1N038**
04465-32170	**A1N038**
04465-32190	**A1N065**
04465-32191	**A1N065**
04465-32200	**A1N048**
04465-32210	**A1N068**
04465-32220	**A1N065**
04465-32230	**A1N068**
04465-33010	**A1N041**
04465-33020	**A1N048**
04465-33021	**A1N048**
04465-33040	**A1N048**
04465-33050	**A1N048**
04465-33060	**A1N041**
04465-33070	**A1N041**
04465-33090	**A1N048**
04465-33120	**A1N097**
04465-33121	**A1N097**
04465-33130	**A1N097**
04465-33140	**A1N041**
04465-33150	**A1N097**
04465-33160	**A1N048**

Genuine No.	ADVICS No.
04465-33170	**A1N041**
04465-33180	**A1N097**
04465-33210	**A1N048**
04465-33240	**A1N073**
04465-33250	**A1N073**
04465-33260	**A1N073**
04465-33270	**A1N106**
04465-33280	**A1N106**
04465-33320	**A1N073**
04465-33340	**A1N073**
04465-33350	**A1N115**
04465-33440	**A1N154**
04465-33450	**A1N154**
04465-33471	**A1N154**
04465-35010	**A1N036**
04465-35020	**A1N036**
04465-35030	**A1N021**
04465-35031	**A1N021**
04465-35040	**A1N021**
04465-35060	**A1N026**
04465-35061	**A1N026**
04465-35080	**A1N029**
04465-35090	**A1N017**
04465-35100	**A1N017**
04465-35120	**A1N016**
04465-35140	**A1N026**
04465-35170	**A1N017**
04465-35180	**A1N036**
04465-35190	**A1N029**
04465-35210	**A1N017**
04465-35220	**A1N049**
04465-35230	**A1N029**
04465-35240	**A1N029**
04465-35250	**A1N011**
04465-35260	**A1N021**
04465-35270	**A1N049**
04465-35280	**A1N029**
04465-35290	**A1N011**
04465-35320	**A1N036**
04465-36010	**A1N061**
04465-36020	**A1N060**
04465-36030	**A1N100**
04465-36040	**SN650**
04465-36050	**A1N061**
04465-36060	**A1N100**
04465-36070	**A1N100**
04465-36080	**A1N100**
04465-36090	**A1N100**
04465-37010	**A1N060**
04465-37020	**A1N102**

Genuine No.	ADVICS No.
04465-37030	**A1N060**
04465-37040	**A1N100**
04465-37050	**A1N102**
04465-37060	**A1N102**
04465-37070	**J1N018**
04465-37090	**J1N018**
04465-37100	**A1N060**
04465-37150	**A1N060**
04465-37160	**A1N102**
04465-37190	**J1N018**
04465-37210	**SN137**
04465-37220	**SN137**
04465-37230	**J1N018**
04465-37240	**A1N102**
04465-40010	**A1N036**
04465-42010	**A1N048**
04465-42011	**A1N048**
04465-42012	**A1N048**
04465-42020	**A1N048**
04465-42040	**A1N048**
04465-42041	**A1N048**
04465-42050	**A1N048**
04465-42060	**A1N048**
04465-42070	**A1N008**
04465-42071	**A1N008**
04465-42080	**A1N008**
04465-42090	**A1N048**
04465-42100	**A1N048**
04465-42110	**A1N008**
04465-42120	**A1N048**
04465-42130	**A1N008**
04465-42140	**A1N129**
04465-42150	**A1N129**
04465-42160	**A1N128**
04465-42160-79	**A1N128**
04465-42180	**A1N129**
04465-43020	**SX199,SX299**
04465-43030	**SN299**
04465-44020	**A1N048**
04465-44030	**A1N048**
04465-44050	**A1N105**
04465-44080	**A1N105**
04465-44090	**A1N105**
04465-44100	**A1N105**
04465-44140	**A1N073**
04465-44170	**A1N073**
04465-45020	**A1N041**
04465-45021	**A1N041**
04465-47010	**A1N048**
04465-47030	**A1N068**

Genuine No.	ADVICS No.
04465-47050	**A1N068**
04465-47060	**A1N192**
04465-47070-79	**A1N192**
04465-48010	**A1N097**
04465-48030	**A1N103**
04465-48050	**SN893**
04465-48060	**A1N097**
04465-48070	**A1N110**
04465-48100	**A1N110**
04465-48150-79	**A1N191**
04465-50010	**A1N041**
04465-50020	**A1N041**
04465-50030	**A1N055**
04465-50040	**A1N056**
04465-50050	**A1N025**
04465-50060	**A1N025**
04465-50070	**A1N025**
04465-50080	**A1N041**
04465-50110	**A1N055**
04465-50130	**A1N041**
04465-50170	**A1N009**
04465-50171	**A1N009**
04465-50180	**A1N009**
04465-50190	**A1N009**
04465-50200	**A1N009**
04465-50220	**A1N025**
04465-50230	**A1N009**
04465-50250	**A1N009**
04465-52010	**A1N068**
04465-52011	**A1N068**
04465-52021	**A1N068**
04465-52022	**A1N068**
04465-52030	**A1N067**
04465-52031	**A1N067**
04465-52040	**A1N067**
04465-52041	**A1N067**
04465-52090	**A1N067**
04465-52100	**A1N068**
04465-52110	**A1N068**
04465-52120	**A1N068**
04465-52150	**A1N068**
04465-52170	**A1N068**
04465-52180	**A1N155**
04465-52190	**SN939**
04465-52210	**SN130P**
04465-52220	**SN130P**
04465-52230	**SN130P**
04465-52240	**SN939**
04465-52260	**A1N155**
04465-52270	**SN939**

Genuine No.	ADVICS No.
04465-52280	**A1N067**
04465-52300	**SN939**
04465-52310	**SN939**
04465-52320	**SN147**
04465-59010	**A1N067**
04465-59020	**A1N067**
04465-60010	**A1N017**
04465-60020	**A1N023**
04465-60030	**A1N021**
04465-60050	**SN274P**
04465-60060	**A1N017**
04465-60110	**A1N023**
04465-60120	**A1N144**
04465-60130	**A1N029**
04465-60150	**A1N144**
04465-60151	**A1N144**
04465-60170	**A1N144**
04465-60190	**A1N144**
04465-60220	**A1N144**
04465-60230	**A1N144**
04465-60240	**A1N144**
04465-60250	**A1N144**
04465-60260	**A1N029**
04465-60270	**A1N011**
04465-60280	**A1N156**
04465-60300	**A1N156**
04465-60310	**A1N156**
04465-60320	**A1N011**
04465-60330	**A1N011**
04465-60340	**A1N144**
04465-65020	**A1N106**
04465-65021	**A1N106**
04465-68010	**A1N073**
04465-71010	**A1N011**
04465-74020	**SN956P**
04465-97402	**G1N006**
04465-B1010	**SN910P**
04465-B1050	**SN943P**
04465-B1050-000	**SN943P**
04465-B1170	**SN949P**
04465-B1350	**A1N155**
04465-B1360	**SN939**
04465-B2150	**D1N046**
04465-B4010	**G1N005**
04465-B4020	**G1N005**
04465-B4030	**G1N005**
04465-B5070	**SN145P**
04465-YZZ01	**A1N048**
04465-YZZ02	**A1N041**
04465-YZZ03	**A1N034**

Genuine No.	ADVICS No.
04465-YZZ04	**A1N038**
04465-YZZ07	**A1N016**
04465-YZZ09	**A1N026**
04465-YZZ10	**A1N021**
04465-YZZ12	**A1N020**
04465-YZZ13	**A1N036**
04465-YZZ50	**A1N034**
04465-YZZ51	**A1N048**
04465-YZZ52	**A1N019**
04465-YZZ53	**A1N023**
04465-YZZ55	**A1N020**
04465-YZZ56	**A1N036**
04465-YZZ57	**A1N021**
04465-YZZ58	**A1N016**
04465-YZZ59	**A1N017**
04465-YZZ60	**A1N049**
04465-YZZ61	**SN219**
04465-YZZ63	**A1N041**
04465-YZZ64	**A1N063**
04465-YZZ65	**A1N085**
04465-YZZ68	**A1N038**
04465-YZZA0	**A1N048**
04465-YZZA1	**A1N041**
04465-YZZA2	**A1N034**
04465-YZZA3	**A1N038**
04465-YZZA4	**A1N016**
04465-YZZA5	**A1N026**
04465-YZZA6	**A1N021**
04465-YZZA7	**A1N020**
04465-YZZA8	**A1N036**
04465-YZZAJ	**A1N036**
04465-YZZB0	**A1N092**
04465-YZZB1	**A1N093**
04465-YZZB3	**A1N078**
04465-YZZB4	**A1N038**
04465-YZZB5	**A1N083**
04465-YZZB6	**A1N085**
04465-YZZC0	**A1N017**
04466-05010	**A2N191**
04466-05020	**A2N191**
04466-07010	**A2N057**
04466-07011	**A2N057**
04466-07020	**A2N057**
04466-0C010	**A2N159**
04466-12040	**A2N095**
04466-12100	**A2N076**
04466-12130	**A2N232**
04466-14010	**A2N080**
04466-14040	**A2N027**
04466-16010	**A2N040**

Genuine No.	ADVICS No.
04466-17030	**A2N044**
04466-17040	**A2N044**
04466-17051	**A2N044**
04466-17080	**A2N044**
04466-17090	**A2N044**
04466-17100	**A2N044**
04466-18010	**A2N040**
04466-18018	**A2N040**
04466-20020	**A2N094**
04466-20040	**A2N081**
04466-20050	**A2N027**
04466-20070	**A2N081**
04466-20080	**A2N081**
04466-20090	**A2N007**
04466-20110	**A2N094**
04466-20140	**A2N081**
04466-21010	**A2N104**
04466-22010	**SN218P**
04466-22030	**A2N080**
04466-22040	**A2N080**
04466-22060	**A2N057**
04466-22070	**A2N080**
04466-22080	**A2N080**
04466-22090	**A2N080**
04466-22100	**SN218P**
04466-22110	**A2N080**
04466-22130	**SN218P**
04466-22140	**A2N057**
04466-22150	**A2N030**
04466-22160	**A2N057**
04466-22170	**A2N030**
04466-22180	**A2N099**
04466-22190	**A2N118**
04466-22190-79	**A2N118**
04466-22220	**★A2N226**
04466-24010	**A2N084**
04466-24020	**A2N084**
04466-26010	**A2N059**
04466-26020	**A2N059**
04466-28010	**A2N047**
04466-28011	**A2N047**
04466-28020	**A2N047**
04466-28030	**A2N069**
04466-28040	**A2N069**
04466-28050	**A2N069**
04466-28070	**A2N069**
04466-28080	**A2N069**
04466-28090	**A2N047**
04466-28110	**A2N191**
04466-28120	**★A2N228**

★Planed to sell in FY2020

Genuine No.	ADVICS No.
04466-28140	★A2N228
04466-30010	A2N080
04466-30020	A2N084
04466-30030	A2N059
04466-30050	A2N059
04466-30060	SN218P
04466-30070	SN218P
04466-30080	A2N057
04466-30100	A2N059
04466-30120	A2N099
04466-30122	A2N099
04466-30130	A2N099
04466-30140	A2N059
04466-30150	A2N099
04466-30151	A2N099
04466-30160	A2N099
04466-30161	A2N099
04466-30170	A2N099
04466-30170-79	A2N099
04466-30190	A2N099
04466-30210	A2N118
04466-30230	A2N118
04466-30280-79	★A2N226
04466-30281-79	★A2N226
04466-30300	★A2N226
04466-30300-79	★A2N226
04466-30310-79	★A2N226
04466-30311-79	★A2N226
04466-30312-79	★A2N226
04466-30330	★A2N226
04466-32010	SN648P
04466-32020	A2N094
04466-32030	A2N066
04466-32040	A2N066
04466-32050	SN648P
04466-33010	A2N081
04466-33040	SN648P
04466-33050	SN648P
04466-33090	A2N104
04466-33100	A2N104
04466-33110	A2N081
04466-33140	A2N104
04466-33150	SN648P
04466-33160	A2N130
04466-33170	A2N104
04466-33180	A2N130
04466-33200	A2N130
04466-37030	J1N018
04466-37050	SN932
04466-37090	J1N018

Genuine No.	ADVICS No.
04466-37100	SN932
04466-37140	SN932
04466-40010	SN238
04466-40030	A2N080
04466-40040	A2N058
04466-42010	A2N031
04466-42020	A2N031
04466-42030	A2N031
04466-42040	A2N031
04466-42050	A2N031
04466-42060	A2N130
04466-42060-79	A2N130
04466-44010	A2N069
04466-45010	A2N069
04466-47050	A2N194
04466-47051	A2N194
04466-47080	A2N196
04466-48010	SN648P
04466-48020	A2N104
04466-48030	A2N111
04466-48040	A2N111
04466-48060	A2N111
04466-48080	A2N104
04466-48090	A2N111
04466-50010	A2N042
04466-50020	A2N058
04466-50030	A2N058
04466-50040	A2N059
04466-50041	A2N059
04466-50050	A2N058
04466-50051	A2N058
04466-50060	A2N058
04466-50070	A2N058
04466-50080	A2N058
04466-50090	A2N010
04466-50091	A2N010
04466-50110	A2N058
04466-50120	A2N010
04466-51010	A2N099
04466-51011	A2N099
04466-51020	A2N099
04466-51030	A2N099
04466-52010	A2N007
04466-52020	A2N007
04466-52030	A2N007
04466-52040	A2N007
04466-52050	A2N007
04466-52060	A2N007
04466-52070	SN938P
04466-52090	A2N007

Genuine No.	ADVICS No.
04466-52110	SN938P
04466-52120	SN938P
04466-52130	SN938P
04466-52140	SN938P
04466-53010	A2N118
04466-53010-79	A2N118
04466-58010	A2N191
04466-60010	A2N012
04466-60020	A2N012
04466-60030	A2N004
04466-60040	A2N012
04466-60050	A2N012
04466-60060	A2N012
04466-60070	A2N004
04466-60080	A2N012
04466-60090	A2N012
04466-60110	A2N004
04466-60120	A2N159
04466-60140	A2N012
04466-60160	A2N159
04466-76012	A2N196
04466-WY040	★A2N226
04466-WY060	★A2N228
04491-01010	A1N034
04491-01011	A1N034
04491-02010	A1N034
04491-06020	A1N041
04491-06040	A1N041
04491-06060	A1N048
04491-06070	A1N048
04491-06080	A1N041
04491-07010	A1N041
04491-10110	A1N043
04491-10111	A1N043
04491-10130	A1N043
04491-10131	A1N043
04491-10141	A1N043
04491-10150	A1N034
04491-10151	A1N034
04491-10160	A1N034
04491-10161	A1N034
04491-10180	A1N034
04491-10210	A1N034
04491-10211	A1N034
04491-10220	A1N034
04491-10230	A1N034
04491-10231	A1N034
04491-10240	A1N034
04491-10241	A1N034
04491-12040	A1N034

★Planed to sell in FY2020

Genuine No.	ADVICS No.
04491-12170	**A1N034**
04491-12190	**SN735**
04491-12230	**A1N034**
04491-12231	**A1N034**
04491-12240	**A1N034**
04491-12241	**A1N034**
04491-12242	**A1N034**
04491-12250	**A1N034**
04491-12251	**A1N034**
04491-12260	**SN735**
04491-12270	**A1N034**
04491-12271	**A1N034**
04491-12280	**A1N034**
04491-12281	**A1N034**
04491-12290	**A1N034**
04491-12291	**A1N034**
04491-12292	**A1N034**
04491-12300	**A1N034**
04491-12301	**A1N034**
04491-12310	**A1N034**
04491-12311	**A1N034**
04491-12320	**A1N034**
04491-12321	**A1N034**
04491-12322	**A1N034**
04491-12323	**A1N034**
04491-12330	**A1N034**
04491-12331	**A1N034**
04491-12340	**A1N034**
04491-12341	**A1N034**
04491-12342	**A1N034**
04491-12350	**A1N034**
04491-12351	**A1N034**
04491-12352	**A1N034**
04491-12360	**A1N034**
04491-12361	**A1N034**
04491-12370	**A1N034**
04491-12371	**A1N034**
04491-12372	**A1N034**
04491-12390	**A1N034**
04491-12401	**A1N034**
04491-12410	**A1N034**
04491-12421	**A1N034**
04491-12422	**A1N034**
04491-12431	**A1N034**
04491-12432	**A1N034**
04491-12440	**A1N034**
04491-12450	**A1N034**
04491-12461	**A1N034**
04491-12470	**A1N034**
04491-12480	**A1N034**

Genuine No.	ADVICS No.
04491-12490	**A1N053**
04491-12491	**A1N034**
04491-12510	**A1N034**
04491-12540	**A1N034**
04491-12541	**A1N034**
04491-12550	**A1N034**
04491-12560	**A1N034**
04491-12561	**A1N034**
04491-12580	**A1N034**
04491-12581	**A1N034**
04491-12590	**A1N053**
04491-12600	**A1N034**
04491-12610	**A1N034**
04491-12620	**A1N034**
04491-12630	**A1N034**
04491-13010	**A1N034**
04491-13011	**A1N034**
04491-13012	**A1N034**
04491-13020	**A1N034**
04491-14120	**SN735**
04491-14150	**SN735**
04491-14171	**A1N034**
04491-14180	**SN735**
04491-14190	**SN763P**
04491-14200	**SN763P**
04491-14201	**SN790P**
04491-14210	**SN763P**
04491-14220	**SN763P**
04491-14221	**SN790P**
04491-14230	**SN763P**
04491-14240	**SN790P**
04491-14250	**SN790P**
04491-14251	**SN790P**
04491-14260	**SN790P**
04491-14270	**SN790P**
04491-14271	**SN790P**
04491-14272	**SN790P**
04491-14280	**SN790P**
04491-14290	**SN763P**
04491-14320	**A1N056**
04491-14330	**A1N028**
04491-14331	**A1N028**
04491-14360	**A1N056**
04491-16040	**A1N034**
04491-16041	**A1N034**
04491-16050	**A1N034**
04491-16051	**A1N034**
04491-16052	**A1N034**
04491-16060	**A1N034**
04491-16061	**A1N034**

Genuine No.	ADVICS No.
04491-16070	**A1N034**
04491-16071	**A1N034**
04491-16080	**A1N034**
04491-16081	**A1N034**
04491-16100	**A1N034**
04491-16101	**A1N034**
04491-16110	**A1N034**
04491-16111	**A1N034**
04491-16120	**A1N034**
04491-16121	**A1N034**
04491-16130	**A1N034**
04491-16131	**A1N034**
04491-16132	**A1N034**
04491-16140	**A1N034**
04491-16150	**A1N034**
04491-16161	**A1N034**
04491-16170	**A1N034**
04491-16171	**A1N034**
04491-16190	**A1N034**
04491-16191	**A1N034**
04491-16200	**A1N034**
04491-16201	**A1N034**
04491-16210	**A1N034**
04491-17010	**A1N034**
04491-17011	**A1N034**
04491-17020	**A1N034**
04491-17021	**A1N034**
04491-17022	**A1N034**
04491-17023	**A1N034**
04491-17030	**A1N034**
04491-17031	**A1N034**
04491-17040	**A1N034**
04491-17050	**A1N034**
04491-17060	**A1N034**
04491-17061	**A1N034**
04491-17070	**A1N034**
04491-17071	**A1N034**
04491-17080	**A1N034**
04491-17081	**A1N034**
04491-17090	**A1N034**
04491-17130	**A1N034**
04491-17160	**A1N053**
04491-20170	**A1N034**
04491-20171	**A1N034**
04491-20180	**A1N034**
04491-20181	**A1N034**
04491-20190	**A1N034**
04491-20191	**A1N034**
04491-20192	**A1N034**
04491-20201	**A1N034**

Genuine No.	ADVICS No.
04491-20202	**A1N034**
04491-20203	**A1N034**
04491-20210	**A1N034**
04491-20211	**A1N034**
04491-20220	**A1N034**
04491-20221	**A1N034**
04491-20230	**A1N034**
04491-20231	**A1N034**
04491-20240	**A1N034**
04491-20241	**A1N034**
04491-20250	**A1N034**
04491-20251	**A1N034**
04491-20252	**A1N034**
04491-20260	**A1N038**
04491-20261	**A1N038**
04491-20270	**A1N034**
04491-20271	**A1N034**
04491-20280	**A1N034**
04491-20281	**A1N034**
04491-20290	**A1N034**
04491-20291	**A1N034**
04491-20310	**A1N034**
04491-20311	**A1N034**
04491-20320	**A1N034**
04491-20321	**A1N034**
04491-20340	**A1N034**
04491-20350	**A1N034**
04491-20351	**A1N034**
04491-20390	**A1N036**
04491-20391	**A1N038**
04491-20400	**A1N034**
04491-20401	**A1N034**
04491-20420	**A1N034**
04491-20430	**A1N038**
04491-20450	**A1N034**
04491-20451	**A1N034**
04491-20460	**A1N034**
04491-20461	**A1N034**
04491-20470	**A1N034**
04491-20471	**A1N034**
04491-20480	**A1N038**
04491-20481	**A1N038**
04491-20490	**A1N034**
04491-20491	**A1N034**
04491-20492	**A1N034**
04491-20500	**A1N034**
04491-20501	**A1N034**
04491-20510	**A1N034**
04491-20511	**A1N034**
04491-20512	**A1N034**

Genuine No.	ADVICS No.
04491-20520	**A1N034**
04491-20521	**A1N034**
04491-20522	**A1N034**
04491-20523	**A1N034**
04491-20530	**A1N038**
04491-20531	**A1N038**
04491-20540	**A1N034**
04491-20541	**A1N034**
04491-20550	**A1N034**
04491-20551	**A1N034**
04491-20552	**A1N034**
04491-20561	**A1N034**
04491-20580	**A1N034**
04491-20581	**A1N034**
04491-20590	**A1N038**
04491-20591	**A1N038**
04491-20600	**A1N034**
04491-20610	**A1N034**
04491-20620	**A1N034**
04491-20640	**A1N038**
04491-20660	**A1N038**
04491-20670	**A1N038**
04491-20680	**A1N038**
04491-20690	**A1N038**
04491-20710	**A1N038**
04491-20720	**A1N038**
04491-20750	**A1N034**
04491-20760	**A1N038**
04491-20770	**A1N034**
04491-20780	**A1N034**
04491-20790	**A1N034**
04491-20800	**A1N034**
04491-20801	**A1N034**
04491-20820	**A1N034**
04491-20830	**A1N038**
04491-20850	**A1N038**
04491-20860	**A1N038**
04491-20880	**A1N048**
04491-22030	**SN238**
04491-22130	**A1N016**
04491-22140	**A1N016**
04491-22141	**A1N016**
04491-22150	**A1N016**
04491-22160	**A1N016**
04491-22161	**A1N016**
04491-22162	**A1N016**
04491-22163	**A1N016**
04491-22170	**A1N016**
04491-22171	**A1N016**
04491-22172	**A1N016**

Genuine No.	ADVICS No.
04491-22173	**A1N016**
04491-22180	**A1N016**
04491-22181	**A1N016**
04491-22190	**A1N016**
04491-22200	**A1N016**
04491-22210	**A1N016**
04491-22220	**A1N016**
04491-22230	**A1N016**
04491-22231	**A1N016**
04491-22240	**A1N016**
04491-22250	**A1N016**
04491-22260	**A1N020**
04491-22261	**A1N020**
04491-22263	**A1N020**
04491-22270	**A1N020**
04491-22280	**A1N020**
04491-22290	**A1N020**
04491-22300	**A1N016**
04491-22310	**A1N020**
04491-22311	**A1N020**
04491-22321	**A1N020**
04491-22330	**A1N020**
04491-22331	**A1N020**
04491-22340	**A1N020**
04491-22350	**A1N020**
04491-22360	**A1N041**
04491-22370	**A1N048**
04491-22380	**A1N016**
04491-22400	**A1N020**
04491-22410	**A1N020**
04491-24010	**A1N016**
04491-24020	**A1N016**
04491-24031	**A1N041**
04491-24041	**A1N054**
04491-24050	**SN790P**
04491-24060	**A1N041**
04491-24070	**A1N054**
04491-24080	**A1N041**
04491-25010	**SN823**
04491-25020	**SN650**
04491-25030	**SN650**
04491-26080	**A1N063**
04491-26091	**A1N036**
04491-26100	**A1N249**
04491-26110	**A1N249**
04491-26120	**A1N063**
04491-26130	**A1N036**
04491-26131	**A1N036**
04491-26140	**A1N036**
04491-26141	**A1N036**

Genuine No.	ADVICS No.
04491-26150	**A1N036**
04491-26151	**A1N036**
04491-26160	**A1N249**
04491-26170	**A1N249**
04491-26180	**A1N249**
04491-26190	**A1N036**
04491-26191	**A1N036**
04491-26200	**A1N063**
04491-26210	**A1N249**
04491-26220	**A1N063**
04491-26240	**A1N049**
04491-26250	**A1N049**
04491-26260	**A1N050**
04491-26261	**A1N050**
04491-26262	**A1N050**
04491-26270	**A1N050**
04491-26280	**A1N049**
04491-26300	**A1N049**
04491-26310	**A1N049**
04491-26320	**A1N050**
04491-26340	**A1N050**
04491-27080	**A1N078**
04491-27081	**A1N078**
04491-27090	**A1N078**
04491-27110	**SN825P**
04491-27120	**SN825P**
04491-27130	**A1N078**
04491-28040	**A1N078**
04491-28050	**A1N078**
04491-28060	**A1N078**
04491-28090	**A1N078**
04491-28091	**A1N078**
04491-28111	**A1N083**
04491-28112	**A1N083**
04491-28140	**A1N078**
04491-28160	**A1N083**
04491-28180	**A1N078**
04491-28200	**A1N078**
04491-28220	**A1N083**
04491-28230	**A1N078**
04491-28250	**A1N085**
04491-28251	**A1N085**
04491-28252	**A1N085**
04491-28260	**A1N078**
04491-28270	**A1N083**
04491-28290	**SN827P**
04491-28320	**SN826P**
04491-28330	**SN827P**
04491-28350	**A1N093**
04491-28351	**A1N093**

Genuine No.	ADVICS No.
04491-28360	**A1N092**
04491-28361	**A1N092**
04491-28370	**SN827P**
04491-28380	**SN826P**
04491-28700-000	**SN827P**
04491-2B020	**A1N034**
04491-2B030	**SN666P**
04491-2B040	**A1N028**
04491-2B050	**A1N048**
04491-2B070	**SN666P**
04491-2B080	**A1N048**
04491-30080	**SN219**
04491-30081	**SN219**
04491-30082	**SN219**
04491-30092	**SN219**
04491-30100	**SN219**
04491-30101	**SN219**
04491-30111	**SN219**
04491-30120	**SN219**
04491-30121	**SN219**
04491-30122	**SN219**
04491-30130	**SN219**
04491-30140	**SN219**
04491-30141	**SN219**
04491-30150	**SN219**
04491-30151	**SN219**
04491-30161	**SN790P**
04491-30170	**SN219**
04491-30171	**SN219**
04491-30180	**A1N019**
04491-30200	**A1N019**
04491-30210	**SN219**
04491-30220	**A1N019**
04491-30230	**A1N019**
04491-30240	**A1N019**
04491-30250	**A1N019**
04491-30260	**A1N019**
04491-30270	**A1N019**
04491-30280	**A1N054**
04491-30281	**A1N054**
04491-30291	**A1N041**
04491-30300	**A1N019**
04491-30310	**A1N019**
04491-30320	**A1N019**
04491-30330	**A1N056**
04491-30331	**A1N041**
04491-32010	**A1N034**
04491-32011	**A1N034**
04491-32012	**A1N034**
04491-32020	**A1N034**

Genuine No.	ADVICS No.
04491-32030	**A1N034**
04491-32031	**A1N034**
04491-32040	**A1N034**
04491-32041	**A1N034**
04491-32042	**A1N034**
04491-32050	**A1N034**
04491-32051	**A1N034**
04491-32070	**A1N034**
04491-32071	**A1N034**
04491-32072	**A1N034**
04491-32080	**A1N034**
04491-32081	**A1N034**
04491-32090	**A1N034**
04491-32091	**A1N034**
04491-32100	**A1N034**
04491-32110	**A1N034**
04491-32120	**A1N034**
04491-32121	**A1N034**
04491-32122	**A1N034**
04491-32123	**A1N034**
04491-32130	**A1N038**
04491-32131	**A1N038**
04491-32132	**A1N038**
04491-32140	**A1N034**
04491-32150	**A1N038**
04491-32151	**A1N038**
04491-32152	**A1N038**
04491-32153	**A1N038**
04491-32160	**A1N038**
04491-32170	**A1N038**
04491-32171	**A1N038**
04491-32180	**A1N034**
04491-32181	**A1N034**
04491-32190	**A1N034**
04491-32200	**A1N038**
04491-32201	**A1N038**
04491-32210	**A1N038**
04491-32211	**A1N038**
04491-32220	**A1N034**
04491-32230	**A1N038**
04491-32231	**A1N038**
04491-32240	**A1N038**
04491-32241	**A1N038**
04491-32250	**A1N038**
04491-32251	**A1N038**
04491-32280	**A1N038**
04491-32281	**A1N038**
04491-32290	**A1N038**
04491-32291	**A1N038**
04491-32300	**A1N038**

Genuine No.	ADVICS No.
04491-32301	**A1N038**
04491-32320	**A1N038**
04491-32341	**A1N038**
04491-32350	**A1N038**
04491-32360	**SN641**
04491-32361	**SN641**
04491-32370	**SN641**
04491-32371	**SN641**
04491-32410	**A1N046**
04491-32411	**A1N046**
04491-32420	**A1N048**
04491-32430	**SN641**
04491-32440	**SN641**
04491-32450	**A1N046**
04491-33010	**A1N048**
04491-33011	**A1N048**
04491-33020	**A1N041**
04491-33021	**A1N041**
04491-33030	**A1N048**
04491-33040	**A1N041**
04491-33041	**A1N041**
04491-33050	**A1N041**
04491-33051	**A1N041**
04491-33060	**A1N048**
04491-33100	**A1N041**
04491-33110	**A1N041**
04491-34010	**A1N019**
04491-35040	**A1N016**
04491-35051	**A1N036**
04491-35062	**A1N036**
04491-35063	**A1N036**
04491-35070	**A1N017**
04491-35071	**A1N017**
04491-35080	**A1N017**
04491-35090	**A1N016**
04491-35091	**A1N016**
04491-35100	**A1N017**
04491-35101	**A1N017**
04491-35110	**A1N017**
04491-35111	**A1N017**
04491-35120	**A1N017**
04491-35130	**A1N036**
04491-35160	**A1N021**
04491-35170	**A1N021**
04491-35171	**A1N021**
04491-35180	**A1N021**
04491-35190	**A1N021**
04491-35200	**A1N036**
04491-35220	**A1N016**
04491-35230	**A1N020**

Genuine No.	ADVICS No.
04491-35240	**A1N026**
04491-35241	**A1N026**
04491-35270	**A1N020**
04491-36010	**A1N061**
04491-36020	**SN650**
04491-36030	**A1N061**
04491-36040	**SN650**
04491-36060	**A1N100**
04491-36070	**A1N060**
04491-36080	**A1N100**
04491-40040	**A1N036**
04491-40041	**A1N036**
04491-42010	**A1N048**
04491-42011	**A1N048**
04491-42012	**A1N048**
04491-50010	**A1N041**
04491-50011	**A1N041**
04491-50020	**A1N041**
04491-50021	**A1N041**
04491-50030	**A1N041**
04491-50031	**A1N041**
04491-50060	**A1N034**
04491-50070	**A1N055**
04491-50071	**A1N055**
04491-50090	**A1N056**
04491-50091	**A1N056**
04491-50110	**A1N055**
04491-50111	**A1N055**
04491-50120	**A1N056**
04491-50121	**A1N056**
04491-50180	**A1N056**
04491-50210	**A1N025**
04491-50240	**A1N025**
04491-60010	**A1N017**
04491-60030	**A1N017**
04491-60040	**A1N017**
04491-60050	**A1N017**
04491-60070	**A1N021**
04491-60080	**A1N021**
04491-60090	**A1N021**
04491-60110	**SN274P**
04491-60140	**SN274P**
04491-60150	**A1N023**
04491-60160	**A1N023**
04491-60170	**A1N023**
04491-60180	**A1N023**
04491-87401	**G1N005**
04491-B1010	**SN910P**
04491-B1020	**SN943P**
04491-B1050	**SN943P**

Genuine No.	ADVICS No.
04491-B1051	**SN943P**
04492-07010	**A2N057**
04492-10010	**A2N040**
04492-12021	**A2N076**
04492-12030	**A2N076**
04492-12031	**A2N076**
04492-14030	**A2N076**
04492-14050	**SN218P**
04492-14080	**A2N080**
04492-14081	**A2N080**
04492-14090	**A2N080**
04492-14100	**A2N080**
04492-14110	**A2N080**
04492-14120	**A2N080**
04492-14130	**A2N080**
04492-14150	**A2N084**
04492-14160	**A2N027**
04492-14161	**A2N027**
04492-16010	**A2N040**
04492-17040	**A2N044**
04492-17050	**A2N044**
04492-17051	**A2N044**
04492-18010	**A2N040**
04492-20010	**A2N081**
04492-20011	**A2N081**
04492-20020	**A2N081**
04492-20021	**A2N081**
04492-20030	**A2N081**
04492-20040	**A2N081**
04492-20050	**A2N081**
04492-20051	**A2N081**
04492-20060	**A2N081**
04492-20061	**SN648P**
04492-20062	**SN648P**
04492-20070	**SN648P**
04492-20071	**SN648P**
04492-20080	**SN648P**
04492-20090	**SN648P**
04492-20100	**SN648P**
04492-20110	**A2N027**
04492-20140	**A2N094**
04492-20150	**A2N081**
04492-22010	**SN218P**
04492-22020	**SN218P**
04492-22030	**SN238**
04492-22040	**A2N080**
04492-22041	**A2N080**
04492-22042	**A2N080**
04492-22043	**A2N080**
04492-22050	**SN238**

Genuine No.	ADVICS No.
04492-22060	**SN238**
04492-22070	**SN238**
04492-22080	**SN238**
04492-22081	**SN238**
04492-22090	**A2N080**
04492-22092	**SN238**
04492-22100	**SN238**
04492-22101	**A2N080**
04492-22110	**A2N080**
04492-22111	**A2N080**
04492-22120	**A2N080**
04492-22121	**A2N080**
04492-22130	**A2N080**
04492-22131	**A2N080**
04492-22140	**A2N080**
04492-22141	**A2N080**
04492-22150	**A2N057**
04492-22160	**A2N057**
04492-24020	**SN218P**
04492-24030	**SN218P**
04492-24040	**SN218P**
04492-24060	**A2N084**
04492-24070	**A2N084**
04492-24080	**A2N084**
04492-24090	**A2N084**
04492-24100	**A2N084**
04492-28010	**A2N047**
04492-28020	**A2N047**
04492-30010	**SN218P**
04492-30011	**SN218P**
04492-30020	**SN218P**
04492-30030	**SN218P**
04492-30031	**SN218P**
04492-30040	**SN218P**
04492-30050	**SN218P**
04492-30060	**SN218P**
04492-30070	**SN218P**
04492-30080	**SN238**
04492-30100	**SN238**
04492-30101	**SN238**
04492-30102	**SN238**
04492-30110	**A2N080**
04492-30111	**A2N080**
04492-30120	**A2N080**
04492-30130	**A2N080**
04492-30140	**A2N059**
04492-30150	**A2N084**
04492-32010	**A2N081**
04492-32011	**A2N081**
04492-32020	**A2N081**

Genuine No.	ADVICS No.
04492-32030	**A2N081**
04492-32040	**A2N081**
04492-32060	**SN648P**
04492-32061	**SN648P**
04492-32070	**SN648P**
04492-32080	**SN648P**
04492-32220	**A1N034**
04492-32420	**A1N048**
04492-32430	**SN641**
04492-32440	**SN641**
04492-32450	**A1N046**
04492-33010	**SN648P**
04492-33020	**SN648P**
04492-33021	**A1N041**
04492-33030	**SN648P**
04492-34010	**A1N019**
04492-35171	**A1N021**
04492-35270	**A1N020**
04492-36010	**A1N061**
04492-36030	**A1N061**
04492-36080	**A1N060**
04492-40010	**SN238**
04492-40020	**A2N080**
04492-40030	**A2N080**
04492-42011	**A1N048**
04492-42012	**A1N048**
04492-50010	**A2N042**
04492-50011	**A2N042**
04492-50020	**A2N058**
04492-50040	**A2N059**
04492-50050	**A2N058**
04492-50051	**A2N058**
04492-50060	**A2N059**
04492-50070	**A2N058**
04492-50071	**A2N058**
04492-50110	**A1N055**
04492-50111	**A1N055**
04492-50210	**A1N025**
04492-50240	**A1N025**
04492-60010	**A2N012**
04492-60020	**A2N012**

Genuine No.	ADVICS No.
41060-01A26	**B1N009**
41060-01A86	**B1N009**
41060-01A90	**B1N009**
41060-01B90	**SN538P**
41060-01B91	**SN538P**
41060-01F87	**SN721P**
41060-02J90	**SN539**
41060-02J91	**SN539P**
41060-03R87	**SN721P**
41060-04B91	**SN538P**
41060-04C85	**B1N004**
41060-04P90	**B1N006**
41060-04U90	**B1N006**
41060-05B91	**SN538P**
41060-05B92	**SN538P**
41060-05N85	**B1N003**
41060-05N90	**B1N011**
41060-05N91	**B1N010**
41060-05N93	**B1N011**
41060-05N94	**B1N010**
41060-06E25	**SN721P**
41060-06F85	**SN721P**
41060-06F87	**SN721**
41060-06F88	**SN721P**
41060-06F89	**SN721**
41060-08N90	**B1N010**
41060-08N91	**B1N010**
41060-08N92	**B1N010**
41060-09G90	**B1N011**
41060-09W25	**B1N003**
41060-09W26	**B1N003**
41060-09W27	**B1N004**
41060-09W90	**B1N003**
41060-09W92	**B1N003**
41060-09W93	**B1N003**
41060-09W94	**B1N003**
41060-0C085	**SN783P**
41060-0C08S	**SN783P**
41060-0C890	**B1N021**
41060-0E590	**B1N020**
41060-0E591	**B1N020**
41060-0E785	**SN783P**
41060-0E786	**SN783P**
41060-0H090	**B1N004**
41060-0H091	**B1N003**
41060-0H525	**B1N011**
41060-0H890	**B1N004**
41060-0M685	**SN803P**
41060-0M890	**B1N237**
41060-0M891	**B1N237**

Genuine No.	ADVICS No.
41060-0M892	**B1N237**
41060-0M893	**B1N237**
41060-0M990	**B1N237**
41060-0N085	**SN803P**
41060-0N685	**SN803P**
41060-0P690	**B1N028**
41060-0P691	**B1N028**
41060-0P692	**B1N028**
41060-0P693	**B1N028**
41060-0P694	**B1N028**
41060-0T385	**SN813P**
41060-0T386	**SN813P**
41060-0T387	**SN813P**
41060-0V090	**B1N019**
41060-0V190	**B1N023**
41060-0V790	**B1N036**
41060-0W725	**B1N062**
41060-0W785	**B1N062**
41060-0W786	**B1N062**
41060-11A93	**B1N009**
41060-11P25	**B1N004**
41060-11P26	**B1N003**
41060-11P27	**B1N003**
41060-11P29	**B1N004**
41060-11P85	**B1N003**
41060-11P86	**B1N004**
41060-11P87	**B1N004**
41060-11P88	**B1N004**
41060-11P90	**B1N003**
41060-11P91	**B1N004**
41060-11P92	**B1N004**
41060-11P93	**B1N004**
41060-11P94	**B1N004**
41060-13E85	**B1N004**
41060-13E90	**B1N003**
41060-13V90	**B1N004**
41060-13V91	**B1N004**
41060-14A26	**B1N004**
41060-14A90	**B1N009**
41060-15E90	**B1N019**
41060-15U90	**B1N020**
41060-16C90	**B1N003**
41060-17B90	**SN538P**
41060-17B91	**SN538P**
41060-17U90	**B1N023**
41060-17V90	**B1N011**
41060-18V90	**B1N011**
41060-18V91	**B1N011**
41060-18V93	**B1N011**
41060-19V90	**B1N011**

Genuine No.	ADVICS No.
41060-1E090	**B1N023**
41060-1E590	**B1N019**
41060-1N025	**B1N237**
41060-1N790	**B1N237**
41060-1W385	**B1N062**
41060-1W386	**B1N062**
41060-1W387	**B1N062**
41060-1W388	**B1N062**
41060-1W485	**B1N062**
41060-1W486	**B1N062**
41060-21T90	**SN574**
41060-21U90	**B1N006**
41060-23C90	**B1N011**
41060-25N25	**B1N003**
41060-25T90	**SN574**
41060-27N90	**B1N011**
41060-27N91	**B1N010**
41060-27N92	**B1N011**
41060-28B85	**SN760P**
41060-28B86	**SN760P**
41060-28E25	**SN721P**
41060-28E26	**SN721**
41060-28N90	**B1N011**
41060-28N91	**B1N010**
41060-2N290	**B1N018**
41060-2N390	**B1N018**
41060-2N392	**B1N018**
41060-2S790	**B1N011**
41060-2T090	**B1N003**
41060-2U090	**SN582P**
41060-2Y090	**B1N039**
41060-2Y091	**B1N039**
41060-2Y990	**B1N039**
41060-30P90	**B1N006**
41060-30P91	**B1N006**
41060-30P93	**B1N006**
41060-31E85	**B1N003**
41060-31E86	**B1N003**
41060-31E87	**B1N003**
41060-31E88	**B1N003**
41060-31E89	**B1N004**
41060-31E90	**B1N003**
41060-31E91	**B1N003**
41060-31E92	**B1N003**
41060-31E93	**B1N003**
41060-31E94	**B1N004**
41060-31N90	**B1N011**
41060-32E90	**B1N004**
41060-32E91	**B1N003**
41060-32E92	**B1N004**

Genuine No.	ADVICS No.
41060-32E93	**B1N003**
41060-32E94	**B1N004**
41060-32F85	**SN721P**
41060-32F86	**SN721P**
41060-32F93	**SN721P**
41060-32G90	**B1N011**
41060-32G91	**B1N011**
41060-32G92	**B1N011**
41060-32G93	**B1N011**
41060-32G94	**B1N011**
41060-32J90	**SN539P**
41060-32R90	**B1N020**
41060-32R91	**B1N020**
41060-32R93	**B1N020**
41060-34Y90	**B1N018**
41060-35F90	**SN760P**
41060-35F92	**SN760P**
41060-35F93	**SN760P**
41060-37G93	**B1N003**
41060-37G94	**B1N003**
41060-37J90	**SN566**
41060-37J91	**SN566**
41060-37J92	**SN566**
41060-37J93	**SN566**
41060-37J94	**SN566**
41060-3C490	**B1N021**
41060-3H085	**B1N062**
41060-3H086	**B1N062**
41060-3J190	**B1N020**
41060-3J191	**B1N020**
41060-3S590	**B1N011**
41060-3T090	**SN574**
41060-40F90	**B1N018**
41060-40F91	**B1N018**
41060-40F92	**B1N018**
41060-40F93	**B1N018**
41060-40F94	**B1N018**
41060-40P90	**B1N006**
41060-40U90	**B1N019**
41060-40U92	**B1N019**
41060-40U93	**B1N019**
41060-41B90	**SN538P**
41060-41B91	**SN538P**
41060-41B92	**SN538P**
41060-41B93	**SN538P**
41060-41F91	**B1N020**
41060-41S25	**SN721**
41060-41S88	**SN721P**
41060-44B90	**SN538P**
41060-44B91	**SN538P**

Genuine No.	ADVICS No.
41060-44B92	**SN538P**
41060-44F91	**B1N020**
41060-45E85	**SN783P**
41060-45N90	**B1N010**
41060-45P90	**B1N006**
41060-47R91	**B1N021**
41060-48R92	**B1N021**
41060-4A00A	**SN935**
41060-4A00C	**SN935**
41060-4A0A1	**H1N009**
41060-4A0A2	**H1N009**
41060-4A0A3	**H1N009**
41060-4A0A5	**SN935**
41060-4L090	**B1N019**
41060-4M490	**B1N037**
41060-4P190	**B1N028**
41060-50Y90	**B1N017**
41060-50Y93	**B1N017**
41060-50Y94	**B1N017**
41060-51E85	**SN783P**
41060-51E87	**SN783P**
41060-51E93	**SN853P**
41060-52F90	**SN760P**
41060-54C85	**SN803P**
41060-54C87	**SN803P**
41060-54C88	**SN803P**
41060-56G85	**B1N004**
41060-56L25	**B1N003**
41060-57C90	**B1N018**
41060-57C91	**B1N018**
41060-57G90	**B1N011**
41060-58A86	**SN760P**
41060-58A90	**SN760P**
41060-58G90	**B1N011**
41060-58Y85	**SN798P**
41060-58Y86	**SN798P**
41060-58Y87	**SN798P**
41060-59G85	**B1N010**
41060-5C590	**SN575P**
41060-5L725	**B1N019**
41060-5L825	**B1N023**
41060-5M026	**B1N019**
41060-5P690	**B1N028**
41060-5T090	**B1N003**
41060-5T091	**B1N004**
41060-5V090	**B1N028**
41060-5V285	**B1N062**
41060-5V286	**B1N062**
41060-5Y790	**B1N039**
41060-60R90	**SN580P**

Genuine No.	ADVICS No.
41060-60R91	**SN580P**
41060-60S85	**B1N004**
41060-60S86	**B1N004**
41060-60S87	**B1N004**
41060-60S88	**B1N004**
41060-60Y91	**SN585P**
41060-60Y94	**SN585P**
41060-61A85	**B1N009**
41060-61A90	**B1N009**
41060-62A91	**B1N009**
41060-62Y90	**B1N018**
41060-63Y90	**B1N017**
41060-64J93	**B1N020**
41060-64Y85	**SN798P**
41060-6525	**SN219**
41060-65E90	**B1N020**
41060-65E91	**B1N020**
41060-65E92	**B1N020**
41060-67R85	**SN798P**
41060-69C85	**SN803P**
41060-6A00A	**SN882**
41060-6A00B	**SN876**
41060-6A00C	**D1N021**
41060-6A0A0	**SN876**
41060-6A0A1	**D1N046**
41060-6E390	**B1N020**
41060-6J090	**B1N020**
41060-6J091	**B1N020**
41060-6M090	**B1N019**
41060-6P085	**B1N062**
41060-6T090	**SN574**
41060-6T290	**B1N031**
41060-6T390	**B1N031**
41060-70N85	**SN783P**
41060-70N86	**SN853P**
41060-70N88	**SN853P**
41060-70T85	**SN571P**
41060-70T86	**SN571P**
41060-71E90	**B1N020**
41060-71E92	**B1N020**
41060-71L90	**B1N020**
41060-72B25	**SN590P**
41060-73L85	**B1N019**
41060-73L91	**B1N039**
41060-73L92	**B1N019**
41060-73L93	**B1N019**
41060-74F90	**B1N006**
41060-74L90	**B1N006**
41060-75A90	**B1N009**
41060-75A91	**B1N009**

Genuine No.	ADVICS No.
41060-75A92	**B1N009**
41060-75F90	**B1N018**
41060-75T90	**B1N019**
41060-75T91	**B1N019**
41060-76A86	**SN760P**
41060-76A87	**SN760P**
41060-76A89	**SN760P**
41060-77A90	**B1N009**
41060-78E90	**B1N020**
41060-78E91	**B1N020**
41060-78J90	**B1N020**
41060-78J91	**B1N020**
41060-78N90	**B1N020**
41060-78N91	**B1N020**
41060-79E90	**B1N021**
41060-79E91	**B1N021**
41060-79E92	**B1N021**
41060-80N90	**B1N020**
41060-84L90	**B1N020**
41060-84L91	**B1N020**
41060-84L92	**B1N020**
41060-85F90	**B1N019**
41060-86R86	**SN798P**
41060-88E86	**B1N019**
41060-88E90	**B1N039**
41060-88E91	**B1N019**
41060-88E92	**B1N019**
41060-88E94	**B1N019**
41060-89EX1	**B1N019**
41060-89T0B	**SN932**
41060-89T0D	**SN932**
41060-89TA2	**SN836P**
41060-89TA3	**SN858P**
41060-89TA6	**SN836P**
41060-89TA7	**SN858P**
41060-89TB0	**SN858P**
41060-89TB1	**SN858P**
41060-89TB3	**SN858P**
41060-89TB4	**SN841P**
41060-89TB6	**J1N018**
41060-89TB8	**SN682P**
41060-89TB9	**SN836P**
41060-89TC0	**SN841P**
41060-89TC1	**SN904**
41060-89TC5	**SN888**
41060-89TC6	**SN841P**
41060-89TC7	**SN836P**
41060-89TC8	**J1N018**
41060-89TC9	**SN836P**
41060-89TD0	**J1N018**

Genuine No.	ADVICS No.
41060-89TD1	**SN932**
41060-89TD3	**SN904**
41060-89TD4	**J1N018**
41060-8H385	**B1N062**
41060-8H386	**B1N062**
41060-8J090	**B1N039**
41060-91F90	**B1N002**
41060-98P90	**B1N011**
41060-9C026	**B1N003**
41060-9E025	**B1N019**
41060-A1586	**SN721**
41060-A1587	**SN721P**
41060-A1787	**B1N009**
41060-A1887	**SN538P**
41060-A1986	**B1N003**
41060-A1987	**B1N004**
41060-AA085	**SN571P**
41060-AA190	**B1N023**
41060-AA525	**B1N006**
41060-AA590	**B1N006**
41060-AA591	**B1N006**
41060-AD080	**B1N062**
41060-AD085	**B1N062**
41060-AD086	**B1N062**
41060-AD087	**B1N062**
41060-AD088	**B1N062**
41060-AL590	**B1N039**
41060-AR090	**B1N036**
41060-AU091	**B1N019**
41060-AX085	**B1N234**
41060-AX086	**B1N234**
41060-C7091	**SN539**
41060-C7194	**SN539**
41060-C7892	**SN539**
41060-C7893	**SN539P**
41060-C8185	**SN539P**
41060-C8186	**SN539**
41060-CA090	**B1N079**
41060-CA092	**B1N079**
41060-CA093	**B1N079**
41060-CK025	**SN899P**
41060-CN000	**SN899P**
41060-CN085	**SN899P**
41060-D1060	**B1N003**
41060-D1485	**SN721**
41060-D1486	**SN721P**
41060-D1488	**SN721**
41060-D1490	**SN721**
41060-D1727	**SN721P**
41060-D1787	**SN721P**

Genuine No.	ADVICS No.
41060-D3085	**SN721P**
41060-D4690	**B1N003**
41060-D4725	**SN721P**
41060-D4726	**SN721**
41060-D5087	**SN721P**
41060-D6090	**B1N003**
41060-EG090	**B1N036**
41060-F2791	**SN219**
41060-F2794	**SN219**
41060-F2891	**SN219**
41060-F2893	**SN219**
41060-F2894	**SN219**
41060-F5027	**SN721P**
41060-F5029	**SN721**
41060-F5086	**SN721**
41060-F5087	**SN721P**
41060-F6493	**B1N004**
41060-F6494	**B1N004**
41060-G1585	**SN831**
41060-G1985	**SN831**
41060-G3690	**SN721P**
41060-G8190	**B1N020**
41060-G8191	**B1N020**
41060-G8192	**B1N020**
41060-G8193	**B1N020**
41060-G8285	**SN762P**
41060-G8385	**SN762**
41060-HA000	**SN281P**
41060-HA00A	**SN918**
41060-HA025	**SN281P**
41060-HA026	**SN281P**
41060-HA027	**SN281P**
41060-HA028	**SN281P**
41060-HC025	**E1N009**
41060-HC026	**E1N009**
41060-HC027	**E1N009**
41060-HC028	**E1N009**
41060-HC030	**E1N009**
41060-HC031	**E1N009**
41060-HC050	**E1N009**
41060-HC051	**E1N009**
41060-HC225	**E1N009**
41060-HC226	**E1N009**
41060-P6520	**SN219**
41060-P6526	**SN219**
41060-P6590	**SN219**
41060-P6625	**SN219**
41060-P6690	**SN721**
41060-P6725	**SN219**
41060-P7225	**SN219**

Genuine No.	ADVICS No.
41060-R9025	**SN219**
41060-T7893	**SN539**
41060-T7894	**SN539P**
41060-V0325	**SN219**
41060-V0326	**SN219**
41060-V0590	**B1N004**
41060-V1825	**SN219**
41060-V4180	**E2N033**
41060-V5025	**B1N004**
41060-V5026	**B1N004**
41060-V5027	**B1N003**
41060-V5090	**B1N004**
41060-V5091	**B1N004**
41060-V5093	**B1N004**
41060-V5094	**B1N004**
41060-V5785	**B1N004**
41060-V5786	**B1N003**
41060-V5787	**B1N004**
41060-V5788	**B1N003**
41060-V5789	**B1N003**
41060-V6025	**B1N004**
41060-V6785	**B1N003**
41060-V6786	**B1N004**
41060-V6787	**B1N004**
41060-V6790	**B1N004**
41060-V6791	**B1N003**
41060-V6793	**B1N004**
41060-V6794	**B1N003**
41060-V7085	**B1N011**
41060-V7090	**B1N011**
41060-V7091	**B1N010**
41060-V7092	**B1N011**
41060-V7093	**B1N010**
41060-V7094	**B1N011**
41060-V7685	**B1N004**
41060-V8787	**B1N004**
41060-VB290	**B1N034**
41060-VB291	**B1N034**
41060-VC091	**B1N034**
41060-VC290	**SN905P**
41060-VE885	**B1N062**
41060-VE886	**B1N062**
41060-VH385	**B1N062**
41060-VJ490	**B1N011**
41060-VR025	**B1N004**
41060-VR985	**B1N004**
41060-VW085	**B1N235**
41060-W1225	**SN721**
41060-W2225	**SN721**
41060-W2285	**SN721**

Genuine No.	ADVICS No.
41060-W2525	**SN721**
41060-W2725	**SN721**
41060-W2727	**SN721P**
41060-W2729	**SN721**
41060-W2786	**SN721**
41060-W2787	**SN721P**
41060-W4325	**SN721**
41060-W4326	**B1N003**
41060-W4385	**SN721P**
41060-W5026	**SN721**
41060-WA490	**B1N037**
41060-WD290	**B1N037**
41060-WJ185	**SN881**
41060-WJ785	**J1N018**
41060-WK60J	**SN118**
41060-WK60K	**SN118**
41060-WL085	**SN899P**
41060-Y9525	**B1N003**
41061-0M892	**B1N237**
44060-01P25	**B2N016**
44060-01P90	**B2N016**
44060-01P92	**B2N016**
44060-01P93	**B2N016**
44060-04U85	**B2N053**
44060-05J85	**SN791**
44060-05J86	**SN791**
44060-05J87	**SN791**
44060-05J88	**SN791**
44060-08G11	**B2N050**
44060-0H085	**B2N045**
44060-0M890	**B2N029**
44060-0N690	**B2N022**
44060-0P690	**B2N057**
44060-0P691	**B2N057**
44060-0P692	**B2N057**
44060-10V85	**B2N045**
44060-10V87	**B2N045**
44060-10V88	**B2N045**
44060-20J85	**SN791**
44060-21P85	**B2N045**
44060-31U90	**B2N022**
44060-31U91	**B2N022**
44060-31U92	**B2N022**
44060-32G85	**B2N050**
44060-32J85	**SN791**
44060-32J86	**SN839P**
44060-35F92	**B2N016**
44060-41685	**B2N045**
44060-41L85	**B2N045**
44060-43P85	**B2N053**

Genuine No.	ADVICS No.
44060-44B90	**B2N026**
44060-45L85	**B2N045**
44060-45L86	**B2N045**
44060-4U010	**B2N040**
44060-4U090	**B2N022**
44060-4U092	**B2N040**
44060-53F92	**B2N016**
44060-54C90	**B2N022**
44060-54C91	**B2N022**
44060-58S85	**B2N045**
44060-58Y25	**SN792P**
44060-58Y85	**SN792P**
44060-5L325	**B2N056**
44060-60F90	**B2N016**
44060-61J90	**B2N022**
44060-61U88	**B2N057**
44060-63C90	**B2N022**
44060-6E390	**B2N022**
44060-6P085	**B2N057**
44060-6T390	**B1N031**
44060-6Y390	**B2N040**
44060-70T85	**B2N056**
44060-71L85	**B2N045**
44060-71L86	**B2N056**
44060-73C90	**B2N022**
44060-73C91	**B2N022**
44060-75C90	**B2N022**
44060-78N90	**B2N022**
44060-78N91	**B2N022**
44060-7E690	**B2N022**
44060-85F90	**B2N016**
44060-85L85	**B2N056**
44060-85L86	**B2N056**
44060-87N90	**B2N022**
44060-87N91	**B2N022**
44060-88E91	**SN791**
44060-8H385	**B2N064**
44060-9V590	**B2N016**
44060-A1190	**B2N016**
44060-A1588	**B2N045**
44060-AA525	**B2N053**
44060-AA585	**B2N053**
44060-AA586	**B2N053**
44060-AG085	**B2N057**
44060-AG087	**B2N056**
44060-AG088	**B2N057**
44060-AG089	**B2N056**
44060-AL585	**B2N064**
44060-AL586	**B2N064**
44060-AM485	**B2N064**

Genuine No.	ADVICS No.
44060-AR085	**B2N057**
44060-AU090	**B2N040**
44060-AU091	**B2N040**
44060-B8E91	**B2N016**
44060-EG085	**B2N064**
44060-EG086	**B2N064**
44060-F6686	**B2N045**
44060-HA00B	**E2N065**
44060-OP691	**B2N057**
44060-P9125	**B2N016**
44060-P9194	**B2N016**
44060-V6786	**B2N045**
44060-V6790	**B2N045**
44060-VB190	**B1N018**
44060-VB290	**B1N018**
44060-VC090	**B1N018**
4605A658	**H1N009**
4605A953	**D2N074**
5-86106235	**B1N004**
AY040-KE119	**D1N046**
AY040-KE121	**H1N009**
AY040-KE136	**SN876**
AY040-KE147	**SN935**
AY040-MA006	**E1N009**
AY040-MA031	**SN918**
AY040-MT012	**D1N021**
AY040-NA114	**B1N011**
AY040-NS001	**B1N006**
AY040-NS003	**B1N006**
AY040-NS004	**SN813P**
AY040-NS005	**SN783P**
AY040-NS006	**SN853P**
AY040-NS008	**SN571P**
AY040-NS009	**SN760P**
AY040-NS010	**B1N018**
AY040-NS011	**B1N020**
AY040-NS012	**B1N004**
AY040-NS013	**B1N011**
AY040-NS015	**B1N019**
AY040-NS016	**B1N010**
AY040-NS017	**B1N011**
AY040-NS018	**B1N028**
AY040-NS019	**SN538P**
AY040-NS020	**SN538P**
AY040-NS021	**B1N237**
AY040-NS022	**B1N021**
AY040-NS023	**B1N011**
AY040-NS024	**B1N010**
AY040-NS025	**B1N006**
AY040-NS026	**B1N006**

Genuine No.	ADVICS No.
AY040-NS030	**B1N018**
AY040-NS031	**B1N020**
AY040-NS032	**B1N019**
AY040-NS033	**B1N019**
AY040-NS034	**B1N021**
AY040-NS035	**SN575P**
AY040-NS036	**B1N028**
AY040-NS037	**B1N006**
AY040-NS038	**B1N004**
AY040-NS039	**B1N237**
AY040-NS040	**SN803P**
AY040-NS041	**B1N019**
AY040-NS042	**B1N023**
AY040-NS043	**B1N062**
AY040-NS045	**B1N062**
AY040-NS046	**B1N020**
AY040-NS047	**B1N020**
AY040-NS048	**B1N019**
AY040-NS049	**B1N023**
AY040-NS050	**B1N028**
AY040-NS051	**B1N062**
AY040-NS052	**B1N020**
AY040-NS053	**B1N037**
AY040-NS054	**B1N019**
AY040-NS055	**B1N039**
AY040-NS056	**SN881**
AY040-NS057	**B1N019**
AY040-NS058	**B1N036**
AY040-NS059	**B1N062**
AY040-NS060	**SN582P**
AY040-NS061	**B1N011**
AY040-NS062	**B1N019**
AY040-NS063	**B1N028**
AY040-NS064	**SN590P**
AY040-NS065	**SN571P**
AY040-NS067	**B1N006**
AY040-NS068	**B1N062**
AY040-NS069	**B1N004**
AY040-NS070	**B1N004**
AY040-NS071	**B1N002**
AY040-NS072	**B1N037**
AY040-NS073	**B1N037**
AY040-NS074	**B1N062**
AY040-NS075	**B1N020**
AY040-NS076	**B1N028**
AY040-NS077	**B1N031**
AY040-NS078	**B1N019**
AY040-NS079	**B1N036**
AY040-NS080	**B1N011**
AY040-NS081	**B1N019**

Genuine No.	ADVICS No.
AY040-NS082	**B1N019**
AY040-NS083	**B1N034**
AY040-NS084	**B1N037**
AY040-NS085	**B1N062**
AY040-NS086	**B1N062**
AY040-NS087	**B1N062**
AY040-NS088	**B1N039**
AY040-NS090	**B1N019**
AY040-NS091	**B1N036**
AY040-NS092	**B1N034**
AY040-NS093	**B1N062**
AY040-NS094	**B1N237**
AY040-NS095	**B1N062**
AY040-NS096	**B1N037**
AY040-NS097	**B1N023**
AY040-NS098	**B1N036**
AY040-NS099	**B1N019**
AY040-NS100	**B1N037**
AY040-NS101	**SN596P**
AY040-NS102	**SN596P**
AY040-NS103	**B1N039**
AY040-NS104	**B1N062**
AY040-NS105	**B1N235**
AY040-NS106	**SN596P**
AY040-NS107	**B1N002**
AY040-NS108	**B1N037**
AY040-NS109	**SN881**
AY040-NS110	**B1N234**
AY040-NS111	**B1N039**
AY040-NS112	**SN899P**
AY040-NS113	**B1N011**
AY040-NS114	**B1N011**
AY040-NS115	**SN596P**
AY040-NS116	**SN899P**
AY040-NS117	**B1N039**
AY040-NS118	**B1N039**
AY040-NS119	**B1N039**
AY040-NS120	**B1N234**
AY040-NS121	**B1N079**
AY040-NS122	**B1N036**
AY040-NS124	**J1N018**
AY040-NS128	**B1N039**
AY040-NS129	**B1N036**
AY040-NS130	**B1N077**
AY040-NS132	**B1N094**
AY040-NS133	**B1N234**
AY040-NS135	**B1N235**
AY040-NS136	**SN957P**
AY040-NS137	**B1N077**
AY040-NS138	**B1N039**

Genuine No.	ADVICS No.
AY040-139	**B1N108**
AY040-NS140	**B1N093**
AY040-NS142	**B1N234**
AY040-NS144	**SN899P**
AY040-NS145	**B1N036**
AY040-NS146	**B1N108**
AY040-NS147	**B1N036**
AY040-NS148	**B1N039**
AY040-NS150	**B1N109**
AY040-NS152	**B1N094**
AY040-NS155	**SN596P**
AY040-NS156	**B1N077**
AY040-NS166	**B1N108**
AY040-NS801	**SN538P**
AY040-NS802	**B1N009**
AY040-NS803	**SN760P**
AY040-NS804	**B1N020**
AY040-NS805	**B1N004**
AY040-NS806	**B1N011**
AY040-NS807	**SN539P**
AY040-NS808	**SN574**
AY040-NS809	**SN783P**
AY040-NS810	**B1N004**
AY040-NS811	**SN721P**
AY040-NS813	**SN538P**
AY040-NS814	**B1N011**
AY040-NS815	**B1N237**
AY040-NS816	**B1N237**
AY040-NS817	**SN582P**
AY040-NS818	**B1N019**
AY040-NS819	**SN585P**
AY040-NS820	**SN575P**
AY040-NS821	**SN538P**
AY040-NS822	**B1N019**
AY040-NS823	**B1N021**
AY040-NS824	**SN539**
AY040-NS825	**SN760P**
AY040-NS827	**B1N011**
AY040-NS828	**B1N004**
AY040-NS829	**SN798P**
AY040-NS830	**B1N020**
AY040-NS831	**B1N011**
AY040-NS833	**SN571P**
AY040-NS834	**SN585P**
AY040-NS835	**SN590P**
AY040-NS836	**B1N018**
AY040-NS837	**B1N011**
AY040-NS838	**SN582P**
AY040-NS839	**B1N020**
AY040-NS840	**B1N028**

Genuine No.	ADVICS No.
AY040-NS841	**B1N019**
AY040-NS842	**B1N023**
AY040-NS843	**SN590P**
AY040-NS901	**B1N017**
AY040-NS902	**B1N017**
AY040-NS903	**B1N017**
AY040-NS904	**SN585P**
AY040-NS905	**SN798P**
AY040-NS906	**SN798P**
AY040-NS910	**B1N018**
AY040-NS911	**B1N018**
AY040-NS912	**SN803P**
AY040-NS913	**B1N020**
AY040-NS914	**B1N020**
AY040-NS915	**B1N020**
AY040-NS916	**B1N020**
AY040-NS917	**B1N006**
AY040-NS918	**B1N003**
AY040-NS919	**B1N004**
AY040-NS920	**B1N003**
AY040-NS921	**B1N011**
AY040-NS922	**B1N011**
AY040-NS923	**SN539**
AY040-NS924	**SN539P**
AY040-NS925	**SN574**
AY040-NS926	**SN760P**
AY040-NS927	**SN783P**
AY040-NS928	**B1N019**
AY040-NS929	**B1N019**
AY040-NS931	**B1N004**
AY040-NS932	**B1N011**
AY040-NS934	**B1N036**
AY040-NS935	**B1N079**
AY040-SZ009	**SN858P**
AY040-SZ010	**SN682P**
AY060-NS001	**B2N057**
AY060-NS002	**B2N050**
AY060-NS003	**B2N053**
AY060-NS005	**B2N057**
AY060-NS006	**SN792P**
AY060-NS008	**B2N056**
AY060-NS009	**B2N016**
AY060-NS010	**B2N022**
AY060-NS011	**B2N022**
AY060-NS012	**B2N022**
AY060-NS013	**B2N022**
AY060-NS014	**B2N029**
AY060-NS015	**B2N022**
AY060-NS017	**B2N056**
AY060-NS018	**B2N022**

Genuine No.	ADVICS No.
AY060-NS019	**B2N022**
AY060-NS020	**B2N053**
AY060-NS021	**B2N022**
AY060-NS022	**B2N057**
AY060-NS023	**B2N056**
AY060-NS024	**B2N016**
AY060-NS025	**B2N057**
AY060-NS026	**B2N064**
AY060-NS027	**B2N056**
AY060-NS028	**B2N040**
AY060-NS029	**B2N057**
AY060-NS030	**B2N064**
AY060-NS031	**B2N022**
AY060-NS032	**B2N016**
AY060-NS033	**B2N040**
AY060-NS034	**B2N057**
AY060-NS035	**B2N056**
AY060-NS036	**B2N056**
AY060-NS037	**B2N040**
AY060-NS038	**B2N064**
AY060-NS039	**B2N064**
AY060-NS040	**B2N064**
AY060-NS041	**B2N064**
AY060-NS043	**B2N064**
AY060-NS044	**B2N053**
AY060-NS045	**B2N064**
AY060-NS046	**B2N099**
AY060-NS047	**B2N095**
AY060-NS050	**B2N095**
AY060-NS051	**B2N095**
AY060-NS801	**B2N045**
AY060-NS802	**B2N016**
AY060-NS803	**B2N022**
AY060-NS806	**B2N045**
AY060-NS808	**B2N026**
AY060-NS810	**B2N022**
AY060-NS901	**B2N045**
AY060-NS902	**SN839P**
AY060-NS904	**B2N053**
AY060-NS906	**B2N095**
D1060-01P90	**B2N016**
D1060-02J90	**SN539**
D1060-05N90	**B1N010**
D1060-0H090	**B1N004**
D1060-0M892	**B1N237**
D1060-0M893	**B1N237**
D1060-11P26	**B1N004**
D1060-11P27	**B1N003**
D1060-11P28	**B1N004**
D1060-11P29	**B1N004**

Genuine No.	ADVICS No.
D1060-11P85	**B1N004**
D1060-11P86	**B1N004**
D1060-11P87	**B1N004**
D1060-11P88	**B1N003**
D1060-11P90	**B1N004**
D1060-11P91	**B1N003**
D1060-11P92	**B1N003**
D1060-11P93	**B1N003**
D1060-1AA0A	**B1N079**
D1060-28N90	**B1N011**
D1060-2Y991	**B1N019**
D1060-30P90	**B1N006**
D1060-30P93	**B1N006**
D1060-31E85	**B1N003**
D1060-32E25	**B1N004**
D1060-32E90	**B1N003**
D1060-32E91	**B1N004**
D1060-32E92	**B1N003**
D1060-32E93	**B1N004**
D1060-32E94	**B1N004**
D1060-37G94	**B1N003**
D1060-37J90	**SN566**
D1060-37J91	**SN566**
D1060-3C490	**B1N021**
D1060-40F90	**B1N018**
D1060-40F91	**B1N018**
D1060-4BA0A	**★B1N248**
D1060-50Y90	**B1N017**
D1060-50Y92	**B1N017**
D1060-50Y93	**B1N017**
D1060-50Y94	**SN585P**
D1060-57G90	**B1N011**
D1060-5P690	**B1N028**
D1060-6J091	**B1N020**
D1060-70T85	**SN571P**
D1060-72B25	**SN590P**
D1060-76A85	**B1N009**
D1060-79E92	**B1N021**
D1060-85F90	**B1N019**
D1060-88E85	**B1N019**
D1060-88E86	**B1N019**
D1060-88E87	**B1N019**
D1060-88E89	**B1N019**
D1060-88E90	**B1N019**
D1060-88E91	**B1N019**
D1060-88E92	**B1N019**
D1060-AA190	**B1N023**
D1060-AA525	**B1N006**
D1060-C7190	**SN539**
D1060-C7191	**SN539**

★Planed to sell in FY2020

Genuine No.	ADVICS No.
D1060-C7192	**SN539**
D1060-CN91B	**SN899P**
D1060-EG00C	**B1N036**
D1060-F2894	**SN219**
D1060-F6494	**B1N004**
D1060-G8190	**B1N020**
D1060-JD00A	**B1N094**
D1060-P6527	**SN219**
D1060-V5090	**B1N003**
D1060-V6725	**B1N004**
D1060-V6790	**B1N004**
D1060-V6791	**B1N003**
D1060-V6793	**B1N004**
D1060-V6794	**B1N003**
D1060-V7090	**B1N003**
D1060-V7091	**B1N011**
D1060-W4325	**SN721**
D1060-WK61A	**SN118**
D106M-35F93	**SN760P**
D106M-40F25	**B1N018**
D106M-40F94	**B1N018**
D106M-51E87	**SN783P**
D106M-51E89	**SN853P**
D106M-51E94	**SN853P**
D106M-65E91	**B1N020**
D106M-65E92	**B1N020**
D106M-88E85	**B1N019**
D106M-A2285	**SN721**
D106M-B1685	**SN538P**
D106M-B1885	**B1N009**
D106M-B2285	**SN721P**
D106M-B2885	**B1N004**
D106M-G8190	**B1N020**
D106M-N1685	**SN538P**
D106M-N1886	**B1N009**
D106M-N1887	**SN760P**
D106M-N2285	**SN721**
D106M-N2286	**SN721P**
D106M-N2287	**SN783P**
D106M-N2288	**B1N018**
D106M-N2289	**SN803P**
D106M-N2585	**B1N019**
D106M-N2586	**B1N006**
D106M-N2588	**B1N006**
D106M-N2885	**B1N004**
D106M-N2886	**B1N011**
D106M-S1685	**SN538P**
D106M-S1825	**B1N009**
D106M-S1826	**SN585P**
D106M-S1827	**SN760P**

★Planed to sell in FY2020

Genuine No.	ADVICS No.
D106M-S1828	**SN798P**
D106M-S2226	**SN721**
D106M-S2525	**B1N020**
D106M-S2526	**B1N021**
D106M-S2825	**B1N004**
D106M-S2826	**B1N011**
D106M-S2828	**B1N004**
D106M-S2885	**B1N004**
D106M-S3685	**SN539P**
D106M-S3686	**SN566**
D106M-S3687	**SN574**
D4060-01P90	**B2N016**
D4060-31U92	**B2N022**
D4060-60F25	**B2N016**
D4060-60F90	**B2N016**
D4060-EM11A	**B2N095**
D4060-JA00A	**B2N095**
D406M-N0985	**B2N056**
D406M-N0986	**B2N016**
D406M-N0989	**B2N022**
D406M-N1185	**B2N053**
D406M-N1425	**B2N045**
D406M-N1426	**B2N045**
D406M-S1490	**B2N050**
D406M-S2085	**SN839P**
DA060-01A90	**B1N009**
DA060-D3085	**SN721P**
DA06M-35F93	**SN760P**
DD06M-N1425	**B2N045**
L1060-08N91	**B1N010**
L1060-W2225	**SN721**
L1060-W2226	**SN721**

Genuine No.	ADVICS No.
41060-HJ00A	**★D1N088**
44060-HJ00A	**★D1N089**
4605A041	**D1N003**
4605A254	**D1N003**
4605A261	**D1N048**
4605A265	**D2N097**
4605A272	**SN882**
4605A336	**D2N049**
4605A340	**H1N009**
4605A364	**D1N048**
4605A389	**A2N012**
4605A447	**D2N097**
4605A458	**A2N012**
4605A471	**D1N003**
4605A472	**A1N011**
4605A479	**D2N049**
4605A481	**A1N011**
4605A483	**A1N011**
4605A486	**D1N048**
4605A487	**D2N097**
4605A527	**H1N009**
4605A530	**D1N048**
4605A558	**D2N049**
4605A562	**D1N034**
4605A592	**SN876**
4605A602	**D1N004**
4605A644	**F2N015**
4605A717	**D1N034**
4605A802	**★E2N086**
4605A953	**D1N075**
4605A998	**★E2N086**
4605B070	**★E2N086**
4605B806	**★E2N086**
4605B808	**★E2N086**
4605B916	**★E2N086**
AW327193	**SN720**
MB082440	**SN732**
MB150864	**SN732**
MB193294	**SN732**
MB193295	**SN732**
MB193296	**SN732**
MB193297	**SN732**
MB193298	**SN732**
MB193299	**SN732**
MB227193	**SN720**
MB238509	**SN732**
MB238967	**SN732**
MB277192	**SN720**
MB277193	**SN720**
MB277618	**SN751**

Genuine No.	ADVICS No.
MB277619	**SN751**
MB295549	**SN244P**
MB295690	**SN244P**
MB295692	**D1N039**
MB295878	**SN244P**
MB295879	**SN244P**
MB295882	**SN244P**
MB295883	**SN244P**
MB295884	**SN244P**
MB295885	**SN244P**
MB295886	**SN244P**
MB295887	**SN244P**
MB295892	**D1N039**
MB295893	**D1N039**
MB295941	**D1N039**
MB295942	**D1N039**
MB295943	**D1N039**
MB295944	**SN244P**
MB295945	**SN244P**
MB295946	**SN244P**
MB316159	**SN751**
MB316167	**SN751**
MB316168	**SN720**
MB316188	**SN720**
MB316553	**SN720**
MB316570	**SN720**
MB316685	**SN751**
MB316757	**SN720**
MB334326	**SN279**
MB334327	**SN279**
MB334338	**SN279**
MB334339	**SN279**
MB334626	**SN279**
MB334627	**SN279**
MB366284	**SN720**
MB366285	**SN720**
MB366286	**SN720**
MB366288	**D2N028**
MB366393	**SN751**
MB366524	**SN751**
MB366525	**SN751**
MB377823	**SN732**
MB377826	**D2N028**
MB377874	**D2N028**
MB407214	**SN732**
MB407216	**SN732**
MB407430	**SN720**
MB407431	**SN720**
MB407433	**SN720**
MB407434	**SN720**

Genuine No.	ADVICS No.
MB407659	**D2N032**
MB407877	**SN720**
MB407938	**SN720**
MB500295	**SN720**
MB500394	**SN751**
MB500399	**SN720**
MB500400	**SN720**
MB500401	**SN720**
MB500609	**SN720**
MB500610	**SN720**
MB500611	**SN720**
MB500812	**D1N033**
MB500813	**D1N033**
MB500816	**D1N033**
MB500819	**D1N033**
MB500960	**SN720**
MB534397	**SN774P**
MB534398	**SN774P**
MB534483	**SN720**
MB534484	**SN720**
MB534485	**SN720**
MB534486	**SN720**
MB534487	**SN720**
MB534488	**SN720**
MB534489	**SN720**
MB534496	**SN751**
MB534644	**SN774P**
MB534653	**D2N032**
MB534712	**SN720**
MB534995	**D2N028**
MB587016	**SN732**
MB587051	**SN720**
MB587053	**SN720**
MB587054	**SN720**
MB587055	**SN720**
MB587056	**SN720**
MB587057	**SN720**
MB587060	**SN720**
MB587061	**SN720**
MB587284	**SN720**
MB587285	**SN774P**
MB597721	**SN732**
MB618116	**SN720**
MB618455	**SN720**
MB618875	**SN774P**
MB668374	**SN257**
MB668397	**SN720**
MB668398	**SN720**
MB668399	**SN720**
MB668400	**SN720**

Genuine No.	ADVICS No.
MB668539	**SN257**
MB668569	**SN257**
MB699054	**SN774P**
MB699055	**SN774P**
MB699056	**D2N032**
MB699087	**D1N033**
MB699088	**D1N033**
MB699089	**SN732**
MB699156	**D2N028**
MB699174	**D1N035**
MB699207	**D1N035**
MB699266	**D1N035**
MB699452	**D1N034**
MB699453	**D1N034**
MB699463	**D1N014**
MB699464	**D1N014**
MB699473	**D1N011**
MB699474	**D1N011**
MB699702	**D1N035**
MB699703	**D1N035**
MB699720	**D2N028**
MB699721	**D1N011**
MB699722	**D2N028**
MB699723	**D2N028**
MB699729	**D2N028**
MB699887	**SN751**
MB857335	**D2N032**
MB857336	**D2N032**
MB857610	**D2N036**
MB857611	**D2N036**
MB857729	**D2N028**
MB857987	**D1N034**
MB858375	**D1N035**
MB858377	**D1N035**
MB858380	**D2N032**
MB858399	**D1N034**
MB858400	**D1N034**
MB858463	**D2N037**
MB858583	**D1N035**
MB858584	**D1N034**
MB858660	**D1N035**
MB858744	**D1N011**
MB858991	**SN654**
MB895072	**D1N035**
MB895090	**D1N034**
MB895091	**D1N034**
MB895166	**SN732**
MB895168	**SN720**
MB895250	**D1N034**
MB895303	**D2N012**

Genuine No.	ADVICS No.
MB898584	**D1N034**
MB911312	**D1N034**
MB928049	**D1N034**
MB928067	**D2N036**
MB928314	**D2N040**
MB928420	**D1N013**
MB928461	**D1N014**
MB928462	**D1N013**
MB928463	**D1N013**
MB928816	**D1N014**
MB928817	**D1N013**
MB928963	**D1N013**
MB950350	**D2N032**
MB950554	**D1N014**
MB950555	**D1N013**
MB950637	**SN654**
MB950998	**SN654**
MC112081	**SN244P**
MC112082	**SN244P**
MC112083	**SN244P**
MC112088	**SN244P**
MC112104	**SN280P**
MC112105	**SN280P**
MC112106	**SN280P**
MC112140	**SN279**
MC112164	**SN280P**
MC112183	**SN244P**
MC112184	**SN244P**
MC112185	**SN244P**
MC112186	**SN244P**
MC112187	**SN244P**
MC112188	**SN244P**
MC112189	**SN279**
MC112190	**SN279**
MC112191	**SN244P**
MC112192	**SN244P**
MC112193	**SN279**
MC112194	**SN279**
MC112201	**D1N039**
MC112202	**D1N039**
MC295942	**D1N039**
MC295943	**D1N039**
MC295945	**SN244P**
MC837975	**SN280P**
MC837977	**SN244P**
MC837978	**SN279**
MC838357	**SN280E**
MC838358	**SN244E**
MC838359	**D1N038**
MC838484	**SN280E**

Genuine No.	ADVICS No.
MC838485	**SN280E**
MC838486	**SN244E**
MC838487	**SN244E**
MC838488	**SN279E**
MC838489	**SN279E**
MC838490	**SN279E**
MC838515	**D1N038**
MC838516	**D1N038**
MC862934	**SN279**
MC862935	**SN279**
MC862936	**SN279**
MC862937	**SN279E**
MC862938	**SN279E**
MC862939	**SN279E**
MC865803	**SN280E**
MC865804	**SN280E**
MC865957	**D1N020**
MC869384	**SN280E**
MC869773	**SN279E**
MC869777	**SN279E**
MC869778	**SN279**
MC869779	**SN279**
MC886334	**SN279E**
MC886920	**SN279E**
MC894576	**SN280E**
MC894577	**SN280E**
MC894579	**SN280E**
MC894580	**SN280E**
MC894588	**SN244E**
MC894589	**SN244E**
MC894597	**D1N038**
MC894598	**D1N038**
MC894601	**D1N020**
MC894604	**D1N020**
MC895168	**SN720**
MK328619	**D1N020**
MK355371	**D1N020**
MK384894	**D1N020**
MK385473	**SN279E**
MK449107	**D1N005**
MK449108	**D1N006**
MK449937	**D1N054**
MK499871	**D1N020**
MK499872	**D1N020**
MK499873	**SN244E**
MK499874	**D1N020**
MK499875	**D1N020**
MK499879	**D1N020**
MK528485	**D1N006**
MK528486	**D1N006**

Genuine No.	ADVICS No.
MK528944	**D1N005**
MK528945	**D1N006**
MK528946	**D1N006**
MK529234	**D1N054**
MK529247	**D1N054**
MK529355	**D1N005**
MK529381	**D1N054**
MK529833	**D1N006**
MK529906	**D1N020**
MK529907	**D1N020**
MK529908	**D1N006**
MK529909	**D1N006**
MK529948	**D1N005**
MK529949	**D1N020**
MK530582	**★D1N082**
MK530830	**D1N006**
MK584462	**D1N083**
MK584463	**D1N084**
MK585735	**D1N081**
MK585782	**★D1N088**
MK585783	**★D1N089**
MN102134	**D2N097**
MN102192	**B1N037**
MN102609	**D1N042**
MN102611	**D1N034**
MN102618	**D1N033**
MN102628	**D2N097**
MN113093	**D1N046**
MN116151	**D1N050**
MN116286	**D2N097**
MN116445	**D1N003**
MN116446	**D1N003**
MN116604	**D1N004**
MN116764	**SN127**
MN116770	**D2N040**
MN116923	**D1N034**
MN116929	**D2N049**
MN125772	**D2N074**
MQ700006	**B1N234**
MQ703583	**B1N234**
MQ907121	**E1N021**
MQ907150	**E1N021**
MQ907152	**SN281P**
MQ907154	**SN281P**
MQ908290	**SN281P**
MQ908291	**E1N021**
MQ908292	**SN281P**
MQ908293	**E1N021**
MQ913139	**E1N021**
MQ913140	**E1N021**

★Planed to sell in FY2020

Genuine No.	ADVICS No.
MR128100	**D2N012**
MR128181	**D1N035**
MR128312	**D1N034**
MR128750	**D2N028**
MR128799	**D1N033**
MR129103	**D1N034**
MR129104	**D1N034**
MR129184	**SN843**
MR129431	**D1N035**
MR129432	**D1N034**
MR129433	**D2N032**
MR129434	**D2N036**
MR129438	**D2N032**
MR129536	**D1N035**
MR129537	**D2N032**
MR129579	**D2N032**
MR162523	**D1N033**
MR162524	**D1N033**
MR205078	**D1N035**
MR205092	**SN654**
MR205143	**D1N035**
MR205144	**D2N032**
MR205145	**SN842P**
MR205256	**D1N042**
MR205257	**D1N042**
MR205269	**D2N037**
MR205377	**D2N040**
MR205380	**D1N034**
MR205974	**D1N019**
MR235055	**SN670**
MR249060	**D1N034**
MR249240	**D2N028**
MR289610	**D1N034**
MR307250	**D1N035**
MR307415	**D2N022**
MR334910	**D1N034**
MR334911	**D1N034**
MR334950	**D1N021**
MR334953	**D1N021**
MR389504	**SN257**
MR389505	**D1N019**
MR389506	**D1N014**
MR389507	**D1N014**
MR389508	**D1N013**
MR389509	**D1N013**
MR389510	**D1N014**
MR389511	**D1N013**
MR389512	**D1N013**
MR389513	**SN751**
MR389517	**SN654**

Genuine No.	ADVICS No.
MR389518	**SN670**
MR389521	**SN720**
MR389526	**D1N033**
MR389528	**SN774P**
MR389530	**SN720**
MR389531	**SN720**
MR389532	**D1N035**
MR389533	**D1N035**
MR389534	**D1N035**
MR389537	**D1N035**
MR389539	**D1N035**
MR389540	**D1N035**
MR389541	**D1N035**
MR389543	**D1N034**
MR389544	**D1N034**
MR389546	**D1N034**
MR389547	**D1N042**
MR389548	**D1N034**
MR389549	**D1N034**
MR389550	**D1N042**
MR389551	**D1N035**
MR389552	**D1N034**
MR389554	**SN732**
MR389555	**SN732**
MR389556	**SN732**
MR389557	**SN732**
MR389561	**D2N028**
MR389565	**D2N040**
MR389566	**D2N028**
MR389567	**SN843**
MR389568	**SN842P**
MR389569	**D2N040**
MR389571	**D2N037**
MR389572	**D2N037**
MR389573	**D2N012**
MR389574	**D2N012**
MR389575	**D2N022**
MR389578	**D2N032**
MR389579	**D2N032**
MR389580	**D2N032**
MR389581	**D2N036**
MR389582	**D2N036**
MR389628	**D2N037**
MR407124	**D1N045**
MR407127	**D1N045**
MR407129	**D1N045**
MR407422	**D1N003**
MR449854	**D1N021**
MR475244	**D1N035**
MR475255	**D1N019**

Genuine No.	ADVICS No.
MR475453	**D1N021**
MR475902	**D1N046**
MR493173	**SN876**
MR493250	**D1N013**
MR493255	**D1N013**
MR493985	**D1N034**
MR510533	**D1N021**
MR510539	**D1N003**
MR510544	**D2N097**
MR510619	**D1N003**
MR510925	**D2N036**
MR527128	**D1N046**
MR527674	**D1N048**
MR527675	**D1N048**
MR527868	**D1N003**
MR569224	**D1N004**
MR569225	**D1N004**
MR569403	**D1N048**
MR569588	**D1N035**
MR569592	**D1N034**
MR569597	**D1N034**
MR569780	**D2N032**
MR569839	**D1N035**
MR955068	**D2N049**
MR977238	**D1N034**
MR977345	**D1N003**
MZ690000	**D1N013**
MZ690001	**D1N035**
MZ690002	**D1N033**
MZ690003	**D1N033**
MZ690006	**D1N034**
MZ690009	**D2N037**
MZ690010	**D2N032**
MZ690016	**D1N042**
MZ690018	**SN720**
MZ690019	**D1N034**
MZ690020	**D1N045**
MZ690021	**D2N036**
MZ690024	**SN257**
MZ690025	**D1N021**
MZ690027	**D2N022**
MZ690028	**SN654**
MZ690029	**SN670**
MZ690030	**D2N037**
MZ690031	**D2N032**
MZ690039	**D1N034**
MZ690045	**D1N021**
MZ690050	**D2N037**
MZ690051	**D2N032**
MZ690139	**D1N046**

MAZDA

Genuine No.	ADVICS No.
MZ690140	**D1N003**
MZ690143	**D2N097**
MZ690166	**D2N032**
MZ690170	**D2N037**
MZ690171	**D2N040**
MZ690176	**E1N021**
MZ690177	**D1N003**
MZ690180	**D1N046**
MZ690183	**D2N097**
MZ690184	**SN281P**
MZ690185	**D1N004**
MZ690186	**D1N048**
MZ690187	**D2N049**
MZS55006	**C1N004**

Genuine No.	ADVICS No.
1A00-26-43Z	**C2N022**
1A00-26-43ZA	**C2N022**
1A00-33-23Z	**H1N006**
1A01-33-23Z	**H1N011**
1A02-33-23Z	**H1N009**
1A02-33-23ZA	**H1N009**
1A02-33-23ZB	**H1N009**
1A02-33-23ZC	**H1N009**
1A03-33-23Z	**H1N014**
1A04-33-23Z	**SN674**
1A04-33-23ZA	**SN674**
1A04-33-23ZB	**SN674**
1A04-33-23ZC	**SN674**
1A05-33-23Z	**H1N009**
1A05-33-23ZA	**H1N009**
1A05-33-23ZC	**H1N009**
1A06-33-23Z	**H1N009**
1A07-33-23Z	**H1N011**
1A08-33-23ZB	**H1N014**
1A10-33-23ZA	**H1N059**
1A12-33-23Z	**H1N011**
1A12-33-23ZA	**H1N011**
1A13-33-23Z	**H1N009**
1A14-33-23Z	**H1N001**
1A15-33-23Z	**SN935**
1A16-33-23Z	**SN946**
1A17-33-23Z	**SN935**
1A18-33-23Z	**SN935**
1A50-33-23Z	**H1N001**
1A51-33-23Z	**H1N059**
1A52-33-23Z	**H1N001**
1A60-33-280A	**H1N008**
1A60-33-280C	**H1N008**
1A61-33-280B	**H1N005**
1A61-33-280C	**H1N005**
1A62-33-280	**H1N014**
1K00-33-23ZA	**J1N018**
1K01-33-23Z	**SN932**
1K01-33-23ZA	**SN932**
1K02-33-23Z	**SN836P**
1K03-33-23Z	**SN888**
1K05-33-23Z	**SN904**
1K09-33-23Z	**J1N018**
1K0B-33-23Z	**J1N018**
1N00-33-28Z	**SN580P**
1N00-33-28ZA	**SN585P**
1N01-33-28Z	**SN798P**
1N02-33-28Z	**SN798P**
1N03-33-28Z	**SN798P**
1N03-33-28ZA	**SN798P**

Genuine No.	ADVICS No.
1N04-33-28Z	**B1N237**
1N05-33-28Z	**B1N237**
1N06-33-28Z	**B1N237**
1N07-33-28Z	**B1N037**
1N08-33-28Z	**B1N037**
1N09-33-28Z	**B1N237**
1N10-33-28Z	**B1N237**
1N11-33-28ZA	**SN585P**
1N12-33-28Z	**SN798P**
1N13-33-28Z	**B1N037**
1N14-33-28Z	**B1N037**
1N15-33-28Z	**B1N237**
1N17-33-28Z	**B1N037**
1N19-33-28Z	**B1N037**
1N20-33-28Z	**SN582P**
1N21-33-28Z	**B1N037**
1N22-33-28Z	**SN798P**
1N24-33-28Z	**SN590P**
1N26-33-28Z	**B1N234**
1N27-33-28Z	**B1N237**
1U00-26-48Z	**E2N030**
1U00-33-28Z	**SN240P**
1U01-26-48Z	**E2N032**
1U01-33-28Z	**SN272**
1U02-33-28Z	**E1N016**
1U03-26-48Z	**E2N032**
1U03-33-28Z	**SN240P**
1U04-26-48Z	**E2N033**
1U05-33-28Z	**E1N014**
1U06-26-48Z	**E2N033**
1U06-33-28Z	**E1N014**
1U07-26-48Z	**E2N033**
1U08-26-48Z	**E2N033**
1U09-26-48Z	**SN656**
1U0B-33-28Z	**E1N014**
1U0C-26-48Z	**SN785**
1U0C-33-28Z	**E1N014**
1U0E-33-28Z	**E1N011**
1U0F-33-28Z	**E1N019**
1U0G-33-28Z	**SN848P**
1U0H-26-48Z	**SN657P**
1U0H-33-28Z	**E1N035**
1U0J-26-48Z	**G2N010**
1U0J-33-28Z	**E1N026**
1U0K-26-48Z	**E2N030**
1U0K-33-28Z	**E1N035**
1U0L-26-48Z	**SN657P**
1U0L-33-28Z	**E1N026**
1U0M-26-48Z	**SN847**
1U0N-26-48Z	**E2N033**

Genuine No.	ADVICS No.
1U0S-33-28Z	**E1N035**
1U0U-33-28Z	**E1N035**
1U10-33-28Z	**SN245**
1U11-33-28Z	**E1N021**
1U12-33-28Z	**SN281P**
1U13-33-28Z	**E1N021**
1U14-33-28Z	**E1N015**
1U16-33-28Z	**E1N022**
1U18-33-28Z	**E1N009**
1U19-33-28Z	**E1N009**
1U1A-33-28Z	**E1N009**
1U1B-33-28Z	**E1N009**
1U1C-33-28Z	**E1N038**
1U1E-33-28Z	**E1N026**
1U1F-33-28Z	**E1N004**
1U1G-33-28Z	**E1N042**
1U1H-33-28Z	**E1N003**
1U1J-33-28Z	**SN281P**
1V35-33-28Z	**B1N237**
1V3A-33-28Z	**SN585P**
1V64-33-28Z	**H1N011**
1V68-33-28Z	**SN627**
1V69-33-28Z	**H1N005**
1V6C-33-28Z	**H1N014**
1V6H-33-28Z	**H1N008**
1V6L-33-28Z	**H1N001**
1V6N-33-28Z	**H1N006**
1V6P-33-28Z	**H1N009**
1V6T-33-28Z	**B1N037**
8BF1-33-625	**E1N011**
A001-33-625	**H1N005**
A011-33-625	**SN627**
A011-33-625A	**SN627**
A031-33-625	**H1N005**
A033-33-625	**H1N005**
A051-33-625	**H1N014**
A061-33-23Z	**H1N014**
A061-33-23ZA	**H1N014**
A083-33-28Z	**H1N008**
A0X1-33-23Z	**H1N005**
A0X2-33-23Z	**H1N005**
A0X2-33-23ZA	**H1N005**
A0Y1-33-23Z	**H1N005**
A0Z1-33-23Z	**SN627**
A0Z1-33-23ZA	**SN627**
B092-33-28Z	**SN240P**
B092-33-28ZA	**SN240P**
B092-49-280	**SN240P**
B092-49-280A	**SN240P**
B095-33-28Z	**SN240P**

Genuine No.	ADVICS No.
B095-33-28ZA	**SN240P**
B095-49-280	**SN240P**
B0Y1-33-23Z	**SN272**
B0Y1-33-23ZA	**SN272**
B0Y1-33-23ZB	**SN272**
B0Y1-33-28Z	**SN272**
B0Y1-33-28ZA	**SN272**
B0YA-26-43Z	**E2N029**
B0YA-26-43ZA	**E2N029**
B0YA-26-43ZB	**E2N029**
B0YA-26-48Z	**E2N029**
B0YW-33-23Z	**E1N016**
B0YW-33-23ZA	**E1N016**
B0YW-33-23ZB	**E1N016**
B0YW-33-23ZC	**E1N016**
B0YW-33-28Z	**E1N016**
B0YW-33-28ZA	**E1N016**
B100-33-28Z	**SN240P**
B100-33-28ZA	**SN240P**
B100-49-280	**SN240P**
B100-49-280A	**SN240P**
B107-26-43Z	**E2N032**
B107-26-48Z	**E2N032**
B107-49-280	**E2N032**
B107-49-480	**E2N032**
B2Y0-26-48Z	**E2N032**
B2Y5-49-280	**SN240P**
B2YB-33-23Z	**E1N014**
B2YB-33-28Z	**E1N014**
B2YD-33-23Z	**E1N003**
B2YD-33-28Z	**E1N003**
B2YV-33-23Z	**E1N016**
B2YV-33-28Z	**E1N016**
B2YZ-33-23Z	**SN272**
B3YH-33-23Z	**SN918**
B3YH-33-23ZA	**SN918**
B4Y0-26-48ZB	**★E2N109**
B4Y0-33-28ZB	**★E1N108**
B4Y1-26-48Z	**E2N032**
B4Y1-26-49Z	**G2N010**
B4Y5-33-23Z	**E1N014**
B4Y5-33-23ZA	**E1N014**
B4Y5-33-28Z	**E1N014**
B4Y6-33-23Z	**E1N014**
B4Y6-33-23ZA	**E1N014**
B4Y6-33-28Z	**E1N014**
B4Y6-33-28ZA	**E1N014**
B4Y6-33-28ZB	**E1N014**
B571-33-23Z	**SN240P**
B5Y0-26-43Z	**G2N010**

Genuine No.	ADVICS No.
B5Y6-33-23Z	**E1N014**
B5Y6-33-23ZA	**E1N014**
B5Y6-33-28Z	**E1N014**
B5Y6-33-28ZA	**E1N014**
B5Y6-33-28ZB	**E1N014**
B5Y8-33-23Z	**E1N014**
B5Y8-33-23ZA	**E1N014**
B5Y8-33-28Z	**E1N014**
B5Y8-33-28ZA	**E1N014**
B5Y8-33-28ZB	**E1N014**
B6Y3-26-43Z	**E2N032**
B6Y3-26-43ZA	**E2N032**
B6Y3-26-48Z	**E2N032**
B6Y3-26-48ZA	**E2N032**
B6Y8-26-43Z	**E2N033**
B6Y8-26-43ZA	**E2N033**
B6Y8-26-48Z	**E2N033**
B6Y8-33-23Z	**SN272**
B6Y8-33-23ZA	**SN272**
B6YS-33-28ZA	**★E1N108**
BCYA-33-23Z	**E1N016**
BCYC-26-43Z	**E2N029**
BCYC-33-23Z	**E1N014**
BCYF-26-43Z	**E2N029**
BCYF-26-43ZA	**E2N029**
BCYF-26-43ZB	**E2N029**
BCYF-26-48Z	**E2N029**
BCYW-33-23Z	**E1N014**
BCYW-33-23ZA	**E1N014**
BCYW-33-23ZB	**E1N014**
BCYW-33-23ZC	**E1N014**
BCYW-33-28Z	**E1N014**
BCYW-33-28ZA	**E1N014**
BG34-49-280	**SN240P**
BG34-49-280A	**SN240P**
BJYD-33-23Z	**E1N003**
BJYD-33-28Z	**E1N003**
BJYE-33-23Z	**E1N003**
BJYE-33-28Z	**E1N003**
BJYM-33-23Z	**E1N003**
BJYM-33-28Z	**E1N003**
BKYT-26-43Z	**E2N043**
BKYT-26-43ZB	**E2N043**
BKYT-26-48Z	**E2N043**
BKYT-26-48ZB	**E2N043**
BL53-33-28Z	**SN240P**
BL53-33-28ZA	**SN240P**
BL78-26-43Z	**E2N032**
BL78-26-46Z	**E2N032**
BL78-26-48Z	**E2N032**

★Planed to sell in FY2020

Genuine No.	ADVICS No.
BLYM-33-23Z	**E1N026**
BLYM-33-28Z	**E1N026**
BPYK-26-48Z	**E2N065**
BPYK-26-48ZA	**E2N065**
BPYK-26-48ZB	**E2N065**
BPYK-33-23ZA	**SN918**
BRY0-33-28Z	**E1N014**
BRY4-33-23Z	**E1N016**
BRY4-33-23ZA	**E1N016**
BRY4-33-28Z	**E1N016**
BRY4-33-28ZA	**E1N016**
BRY5-33-23ZA	**E1N016**
BRY6-33-23Z	**E1N016**
BRY6-33-23ZA	**E1N016**
BRY7-33-23Z	**E1N014**
BRY7-33-23ZA	**E1N014**
BTYF-26-48Z	**E2N029**
BWYH-26-43Z	**G2N010**
BWYH-26-48Z	**G2N010**
C1Y0-33-23Z	**E1N026**
C1Y0-33-23ZA	**E1N026**
C1Y0-33-28Z	**E1N026**
C1Y0-33-28ZA	**E1N026**
C2Y3-26-48Z	**E2N065**
C2Y3-26-48ZA	**E2N065**
C2Y3-33-23Z	**SN918**
C2Y3-33-23ZA	**SN918**
CBY0-33-23Z	**E1N026**
CBY0-33-28Z	**E1N026**
CBY1-33-23Z	**E1N026**
CBY1-33-23ZA	**E1N026**
CBY1-33-23ZB	**E1N026**
CBY1-33-23ZC	**E1N026**
CBY1-33-23ZD	**E1N026**
CBY1-33-23ZE	**E1N026**
CBY1-33-23ZF	**E1N026**
CBY1-33-23ZG	**E1N026**
CBY1-33-28Z	**E1N026**
CBY1-33-28ZA	**E1N026**
CBY1-33-28ZB	**E1N026**
CBY1-33-28ZC	**E1N026**
CBY1-33-28ZD	**E1N026**
CBY1-33-28ZE	**E1N026**
CBY1-33-28ZF	**E1N026**
CBY1-33-28ZG	**E1N026**
CBY3-33-23Z	**E1N042**
CBY3-33-28Z	**E1N042**
CBY4-33-28Z	**E1N042**
CBY9-33-28Z	**E1N026**
D0Y1-33-28Z	**★E1N107**

Genuine No.	ADVICS No.
D0Y1-33-28ZA	**★E1N107**
D1Y1-33-23Z	**E1N014**
D1Y1-33-23ZA	**E1N014**
D1Y4-33-23Z	**E1N014**
D1Y4-33-28Z	**E1N014**
D1Y5-33-23Z	**E1N014**
D1Y5-33-23ZA	**E1N014**
D1Y5-33-28Z	**E1N014**
D1Y5-33-28ZA	**E1N014**
D1Y7-33-23Z	**E1N014**
D1Y7-33-23ZA	**E1N014**
D2Y1-33-28Z	**E1N014**
D2Y6-33-23Z	**E1N014**
D2Y6-33-28Z	**E1N014**
D2Y7-33-23Z	**E1N014**
D2Y7-33-23ZA	**E1N014**
D2Y7-33-28Z	**E1N014**
D2Y7-33-28ZA	**E1N014**
D2Y9-33-23Z	**E1N014**
D2Y9-33-23ZA	**E1N014**
D2Y9-33-28Z	**E1N014**
D2Y9-33-28ZA	**E1N014**
D3Y0-33-28ZA	**SN901**
D3Y0-33-28ZB	**SN901**
D3Y0-33-28ZC	**SN901**
D6Y1-33-28Z	**E1N080**
DAY3-26-48ZA	**★E2N088**
DBY1-33-28ZA	**★E1N107**
DCY0-33-23Z	**E1N014**
DCY0-33-23ZA	**E1N014**
DCY0-33-23ZB	**E1N014**
DCY0-33-28Z	**E1N014**
DCY0-33-28ZB	**E1N014**
DCY1-33-23Z	**E1N014**
DCY1-33-28Z	**E1N014**
E0Y8-26-43Z	**G2N010**
E0Y8-26-43ZA	**G2N010**
E0Y8-26-43ZB	**G2N010**
E0Y9-26-43Z	**G2N010**
E0Y9-26-43ZA	**G2N010**
EHY2-33-23Z	**E1N053**
EHY2-33-28Z	**E1N053**
EHY4-33-23Z	**E1N053**
EHY4-33-28Z	**E1N053**
F070-33-28Z	**E1N011**
F070-33-28ZA	**E1N011**
F1Y1-26-43Z	**SN433P**
F1Y1-26-48Z	**SN433P**
F1Y1-33-23Z	**E1N006**
F1Y1-33-23ZA	**E1N006**

Genuine No.	ADVICS No.
F1Y1-33-23ZB	**E1N006**
F1Y1-33-23ZC	**E1N006**
F1Y1-33-28Z	**E1N006**
F1Y1-33-28ZA	**E1N006**
F1Y1-33-28ZB	**E1N006**
F1Y2-33-23Z	**E1N006**
F1Y2-33-28Z	**E1N006**
F1Y3-26-48Z	**SN433P**
F1Y3-33-28Z	**E1N006**
F1Y4-33-23Z	**E1N006**
F1Y4-33-28Z	**E1N006**
F1Y7-33-23Z	**E1N006**
F1Y7-33-23ZA	**E1N006**
F1Y8-33-23Z	**E1N006**
F1Y9-33-23Z	**E1N006**
F1Y9-33-23ZA	**E1N006**
F1YA-33-23ZC	**E1N006**
F1YA-33-28ZA	**E1N006**
F1YA-33-28ZB	**E1N006**
F1Z4-33-23Z	**E1N019**
F1Z4-33-28Z	**E1N019**
FA67-49-280	**E2N033**
FB06-49-280	**E2N033**
FB06-49-280A	**E2N033**
FB34-49-280	**E1N011**
FB34-49-280A	**E1N011**
FB34-49-280B	**E1N011**
FB34-49-280C	**E1N011**
FB34-49-280D	**E1N011**
FB36-49-280	**E1N011**
FB36-49-280C	**E1N011**
FB36-49-280D	**E1N011**
FB71-26-28Z	**E2N033**
FB71-26-28ZA	**E2N033**
FB71-33-28ZC	**E1N011**
FB71-33-28ZD	**E1N011**
FBY1-26-48Z	**E2N033**
FC02-33-28Z	**E1N011**
FC02-33-28ZA	**E1N011**
FD23-33-28Z	**E1N019**
FDY1-26-43Z	**E2N033**
FDY1-26-43ZA	**E2N033**
FDY1-26-48Z	**E2N033**
FDZ3-33-23Z	**E1N019**
FDZ3-33-28Z	**E1N019**
FDZ3-33-28ZA	**E1N019**
FIY1-33-23ZA	**E1N006**
FIY1-33-28Z	**E1N006**
FIY7-33-23Z	**E1N006**
G0YG-26-43Z	**SN785**

★Planed to sell in FY2020

Genuine No.	ADVICS No.
G0YG-26-48Z	**SN785**
G0YK-26-43Z	**E2N033**
G0YK-26-43ZA	**E2N033**
G0YK-33-23Z	**SN848P**
G0YK-33-23ZA	**SN848P**
G0YK-33-28Z	**SN848P**
G1YC-33-23Z	**E1N042**
G1YC-33-23ZA	**E1N042**
G1YC-33-23ZB	**E1N042**
G1YC-33-28Z	**E1N042**
G1YC-33-28ZA	**E1N042**
G1YC-33-28ZB	**E1N042**
G1YC-33-28ZC	**E1N042**
G1YH-33-23Z	**E1N035**
G1YH-33-28Z	**E1N035**
G1YN-33-23Z	**E1N042**
G1YN-33-23ZA	**E1N042**
G1YN-33-28Z	**E1N042**
G1YN-33-28ZA	**E1N042**
G211-33-28Z	**E1N035**
G212-33-28ZA	**E1N035**
G225-33-28Z	**E1N035**
G235-33-28Z	**E1N035**
G2YD-33-23Z	**SN599P**
G2YD-33-28Z	**SN599P**
G2YS-33-23Z	**SN919P**
G2YS-33-23ZA	**SN919P**
G2YS-33-23ZB	**SN919P**
G2YS-33-28Z	**SN919P**
G5Y5-26-43Z	**SN656**
G5Y5-26-43ZA	**SN656**
G5Y5-26-43ZB	**SN656**
G5Y5-26-48Z	**SN656**
G5Y6-26-43Z	**SN656**
G5Y6-26-43ZA	**SN656**
G5Y6-26-43ZB	**SN656**
G5Y6-26-43ZC	**SN656**
G5Y6-26-48Z	**SN656**
G5Y6-26-48ZA	**SN656**
G5Y6-26-48ZC	**SN656**
G5Y6-33-23Z	**E1N026**
G5Y6-33-23ZA	**E1N026**
G5Y6-33-23ZB	**E1N026**
G5Y6-33-23ZC	**E1N026**
G5Y6-33-23ZD	**E1N026**
G5Y6-33-28Z	**E1N026**
G5Y6-33-28ZA	**E1N026**
G5Y6-33-28ZB	**E1N026**
G5Y6-33-28ZC	**E1N026**
G717-33-28Z	**E1N035**

Genuine No.	ADVICS No.
G718-33-28Z	**E1N035**
G718-33-28ZA	**E1N035**
G7Y6-33-23Z	**E1N026**
G7Y6-33-23ZA	**E1N026**
G7Y6-33-28ZA	**E1N026**
G7Y6-33-28ZB	**E1N026**
GAYA-33-23Z	**E1N026**
GAYE-26-43ZA	**SN656**
GAYE-26-43ZB	**SN656**
GAYE-26-43ZC	**SN656**
GAYR-33-23ZA	**E1N026**
GAYR-33-23ZB	**E1N026**
GAYR-33-23ZC	**E1N026**
GAYR-33-23ZD	**E1N026**
GAYR-33-23ZE	**E1N026**
GAYR-33-23ZF	**E1N026**
GAYR-33-28Z	**E1N026**
GAYR-33-28ZA	**E1N026**
GAYR-33-28ZB	**E1N026**
GAYR-33-28ZC	**E1N026**
GAYR-33-28ZD	**E1N026**
GBYH-33-23Z	**E1N026**
GBYH-33-23ZB	**E1N026**
GBYH-33-28ZA	**E1N026**
GCYD-33-23Z	**E1N026**
GCYD-33-23ZA	**E1N026**
GCYD-33-23ZB	**E1N026**
GCYD-33-23ZC	**E1N026**
GCYD-33-23ZD	**E1N026**
GCYD-33-23ZE	**E1N026**
GCYD-33-28Z	**E1N026**
GCYD-33-28ZA	**E1N026**
GCYD-33-28ZB	**E1N026**
GCYD-33-28ZC	**E1N026**
GCYD-33-28ZD	**E1N026**
GCYD-33-28ZE	**E1N026**
GDYE-33-23Z	**E1N042**
GDYE-33-23ZA	**E1N042**
GDYE-33-28ZA	**E1N042**
GEYC-26-43Z	**E2N033**
GEYC-26-43ZA	**E2N033**
GEYC-26-43ZB	**E2N033**
GEYC-26-48Z	**E2N033**
GEYC-26-48ZA	**E2N033**
GEYC-26-48ZB	**E2N033**
GEYT-33-23Z	**E1N026**
GEYT-33-28Z	**E1N026**
GEYT-33-28ZA	**E1N026**
GFYR-33-28Z	**E1N042**
GGYA-33-23ZA	**E1N026**

Genuine No.	ADVICS No.
GGYB-26-43Z	**E2N033**
GGYB-26-48Z	**E2N033**
GGYM-26-43Z	**E2N033**
GGYM-26-48Z	**E2N033**
GHY9-26-48Z	**★E2N086**
GHY9-26-48ZA	**★E2N086**
GHY9-26-48ZB	**★E2N086**
GHY9-26-48ZC	**★E2N086**
GHYD-33-28ZA	**E1N026**
GJ21-33-28Z	**E1N035**
GJ21-33-28ZA	**E1N035**
GJ21-33-28ZB	**E1N035**
GJ25-26-48Z	**SN785**
GJ25-26-48ZA	**SN785**
GJ87-26-43Z	**SN785**
GJ87-26-48Z	**SN785**
GJ87-26-48ZA	**SN785**
GJY1-33-28Z	**E1N035**
GJYA-26-43Z	**E2N033**
GJYA-26-43ZA	**E2N033**
GJYA-26-46ZA	**E2N033**
GJYA-26-48Z	**E2N033**
GJYA-26-48ZA	**E2N033**
GJYA-33-23ZC	**SN599P**
GJYA-33-23ZD	**SN599P**
GJYA-33-28ZC	**SN599P**
GJYA-33-28ZD	**SN599P**
GJYB-26-43Z	**E2N033**
GJYB-26-43ZA	**E2N033**
GJYB-26-48Z	**E2N033**
GJYB-26-48ZA	**E2N033**
GJYB-33-23ZC	**SN599P**
GJYB-33-28ZC	**SN599P**
GJYE-33-23ZC	**SN919P**
GJYE-33-23ZD	**SN919P**
GJYE-33-23ZF	**SN919P**
GJYE-33-28ZC	**SN919P**
GJYE-33-28ZD	**SN919P**
GJYE-33-28ZF	**SN919P**
GJYF-33-23ZB	**SN919P**
GJYF-33-23ZC	**SN919P**
GJYF-33-28ZB	**SN919P**
GJYF-33-28ZC	**SN919P**
GJYG-33-23Z	**SN919P**
GJYG-33-23ZA	**SN919P**
GJYG-33-23ZB	**SN919P**
GN51-33-23Z	**E1N035**
GN51-33-28Z	**E1N035**
GN60-33-23Z	**E1N035**
GN60-33-28Z	**E1N035**

★Planed to sell in FY2020

Genuine No.	ADVICS No.
GPYB-26-43Z	**E2N067**
GPYB-26-48Z	**E2N067**
GS39-26-23Z	**E2N033**
GSYD-33-28ZA	**E1N071**
H260-33-28Z	**SN245**
H260-33-28ZA	**SN245**
H260-33-28ZB	**SN245**
H260-33-625	**SN245**
H261-33-28ZA	**SN245**
H330-33-28Z	**SN245**
H330-33-28ZA	**SN245**
H4Y0-26-43Z	**SN657P**
H4Y0-26-48Z	**SN657P**
H722-33-23Z	**SN245**
H722-33-23ZA	**SN245**
H722-33-23ZB	**SN245**
H722-33-28Z	**SN245**
H722-33-28ZA	**SN245**
HE21-33-28Z	**SN245**
HE21-33-28ZA	**SN245**
HE21-33-28ZB	**SN245**
J001-33-625A	**SN272**
J0Y1-26-43Z	**SN657P**
J0Y1-26-43ZA	**SN657P**
J0Y1-26-43ZB	**SN657P**
J0Y1-26-48Z	**SN657P**
J0Y1-33-23Z	**SN272**
J0Y1-33-23ZA	**SN272**
K0Y1-26-48Z	**★E2N088**
K0Y1-26-48ZA	**★E2N088**
K0Y1-26-48ZC	**★E2N088**
K0Y1-33-23Z	**★E1N085**
K0Y1-33-28Z	**★E1N085**
K0Y1-33-28ZA	**★E1N085**
L0Z1-33-23Z	**E1N021**
L0Z1-33-23ZA	**E1N021**
L0Z1-33-23ZB	**E1N021**
L0Z1-33-28Z	**E1N021**
L0Z1-33-28ZA	**E1N021**
L0Z1-33-28ZB	**E1N021**
L2Y6-26-43Z	**SN586**
L2Y6-26-48Z	**SN586**
L2Y6-33-23Z	**E1N053**
L2Y6-33-28Z	**E1N053**
L2Y7-26-43Z	**SN586**
L2Y7-26-48Z	**SN586**
LA01-33-28Z	**E1N018**
LA01-33-28ZA	**E1N018**
LAY1-33-28ZA	**E1N018**
LAY1-33-28ZB	**E1N018**

Genuine No.	ADVICS No.
LAY1-33-28ZC	**E1N018**
LAY1-33-28ZD	**E1N018**
LAY1-33-28ZE	**E1N018**
LAY3-33-28Z	**SN281P**
LAY3-33-28ZA	**SN281P**
LAZ2-33-28ZA	**E1N018**
LAZ5-33-28Z	**E1N021**
LBY0-26-43Z	**SN657P**
LBZ1-33-28Z	**E1N021**
LBZ2-33-23Z	**E1N021**
LBZ2-33-23ZA	**E1N021**
LBZ2-33-28Z	**E1N021**
LBZ2-33-28ZA	**E1N021**
LBZ3-33-23Z	**E1N021**
LCY1-33-23Z	**E1N021**
LCY2-33-23Z	**E1N004**
LCY2-33-23ZA	**E1N004**
LCY2-33-23ZB	**E1N004**
LCY2-33-28Z	**E1N004**
LCY2-33-28ZA	**E1N004**
LDY7-33-23Z	**E1N004**
LDY7-33-23ZA	**E1N004**
LDY7-33-28Z	**E1N004**
LDY7-33-28ZA	**E1N004**
LEY4-26-43Z	**E2N048**
LEY4-26-43ZA	**E2N048**
LEY4-26-48Z	**E2N048**
LEY4-26-48ZA	**E2N048**
LEY4-33-23Z	**E1N004**
LEY4-33-28Z	**E1N004**
LEY5-33-23Z	**E1N004**
LEY5-33-28Z	**E1N004**
LEY6-26-43Z	**E2N048**
LEY8-33-23Z	**E1N004**
LEY8-33-28Z	**E1N004**
LEY9-33-23Z	**E1N004**
LEY9-33-28Z	**E1N004**
LF24-33-625	**E1N053**
N0Y1-33-23Z	**E1N015**
N0Y1-33-23ZA	**E1N015**
N0Y1-33-28Z	**E1N015**
N0Y1-33-28ZA	**E1N015**
N0Y3-33-23Z	**E1N022**
N0Y3-33-28Z	**E1N022**
N0Y6-26-48Z	**E2N030**
N0Y6-26-48ZA	**E2N030**
N0Y7-26-48ZA	**SN952P**
N0Y7-26-48ZB	**SN952P**
N0Y7-26-48ZC	**SN952P**
N0Y8-26-43Z	**E2N030**

Genuine No.	ADVICS No.
N0Y8-26-43ZA	**E2N030**
N0Y9-26-43ZA	**SN952P**
N0Y9-26-43ZB	**SN952P**
N0Y9-26-43ZC	**SN952P**
NA01-33-625	**E1N015**
NAY0-26-43Z	**G2N010**
NAY0-26-43ZA	**G2N010**
NAY0-33-23ZA	**E1N015**
NAY0-33-23ZB	**E1N015**
NAY0-33-23ZC	**E1N015**
NAY0-33-28ZA	**E1N015**
NAY1-26-43Z	**G2N010**
NAY1-26-48Z	**G2N010**
NAY1-33-23Z	**E1N015**
NAY1-33-23ZA	**E1N015**
NAY1-33-28Z	**E1N015**
NAY5-26-43Z	**E2N030**
NAY5-26-43ZA	**E2N030**
NAY5-26-43ZB	**E2N030**
NAY5-26-48Z	**E2N030**
NAY5-33-23Z	**E1N022**
NAY5-33-23ZA	**E1N022**
NAY5-33-23ZB	**E1N022**
NAY5-33-23ZC	**E1N022**
NAY5-33-28Z	**E1N022**
NAY5-33-28ZA	**E1N022**
NAY5-33-28ZB	**E1N022**
NAY9-26-43Z	**G2N010**
NAY9-26-43ZA	**G2N010**
NAY9-26-48Z	**G2N010**
NAZ0-26-48Z	**E1N022**
NAZ0-33-28Z	**E1N015**
NAZ0-33-28ZA	**E1N015**
NCY0-26-48Z	**E2N030**
NCY0-33-23Z	**E1N022**
NCY0-33-28Z	**E1N022**
NCY1-33-23Z	**E1N022**
NCY1-33-28Z	**E1N022**
NCY5-33-23Z	**E1N022**
NCY5-33-28Z	**E1N022**
QSE1-49-280	**E1N006**
QSE1-49-480	**SN433P**
S083-49-280	**E1N008**
S083-49-280A	**E1N009**
S091-49-280	**E1N008**
S091-49-280A	**E1N009**
S0YN-26-43Z	**SN657P**
S0YN-26-48Z	**SN657P**
S1YH-26-43Z	**SN657P**
S231-49-280	**E1N009**

★Planed to sell in FY2020

Genuine No.	ADVICS No.
S231-49-280A	**E1N009**
S269-49-280	**E1N008**
S269-49-280A	**E1N009**
S2YA-33-23Z	**E1N009**
S2YA-33-23ZA	**E1N009**
S2YA-33-28Z	**E1N009**
S2YA-33-28ZA	**E1N009**
S47R-33-28ZA	**SN116**
S4YK-33-23Z	**E1N021**
S4YK-33-23ZA	**E1N021**
S4YP-33-23Z	**SN281P**
S4YP-33-23ZA	**SN281P**
S4YP-33-28Z	**SN281P**
S4YP-33-28ZA	**SN281P**
S4YR-33-23Z	**SN116**
S4YR-33-23ZA	**SN116**
S4YR-33-28Z	**SN116**
S4YR-33-28ZA	**SN116**
S660-49-230	**E1N009**
S660-49-230A	**E1N009**
S660-49-280	**E1N009**
S660-49-280A	**E1N009**
S661-49-230	**E1N009**
S661-49-230A	**E1N009**
SE96-33-28Z	**E1N009**
SE96-33-28ZA	**E1N009**
SF04-33-28Z	**E1N009**
T0Y0-26-43Z	**SN847**
T0Y0-26-48Z	**SN847**
T0Y0-33-23Z	**E1N038**
T0Y0-33-28Z	**E1N038**
TA01-26-43Z	**SN847**
TA01-26-48Z	**SN847**
TA01-33-23Z	**E1N038**
TA01-33-28Z	**E1N038**
TAY2-26-43Z	**SN847**
TAY2-26-48Z	**SN847**
TBY7-26-43Z	**SN847**
TBY7-26-48Z	**SN847**
TBY7-33-23Z	**E1N038**
TDY1-33-23Z	**E1N053**
TDY1-33-28Z	**E1N053**
U0Y9-33-23Z	**E1N038**
U0Y9-33-23ZA	**E1N038**
U0Y9-33-28Z	**E1N038**
W2Y5-33-23Z	**SN865**
W2Y5-33-23ZB	**SN865**
W5Y0-33-23Z	**J1N018**
W5Y0-33-28Z	**J1N018**
ZZS0-49-230	**H1N006**

Genuine No.	ADVICS No.
ZZS1-49-230	**H1N006**
ZZS1-49-230A	**H1N006**
ZZS1-49-230B	**H1N006**
ZZS1-49-230C	**H1N006**
ZZS1-49-230D	**H1N006**
ZZSA-49-230	**H1N006**
ZZSB-49-230	**H1N006**
ZZSB-49-230A	**H1N058**

Genuine No.	ADVICS No.
06022-SP8-000	**C2N022**
06430-S0A-J00	**C2N015**
06430-S0K-J01	**C2N021**
06430-S2A-000	**C2N015**
06430-S2X-J00	**C2N021**
06430-S3N-J00	**C2N021**
06430-S5A-J00	**C2N015**
06430-S6D-000	**C2N015**
06430-S6D-E50	**C2N015**
06430-S7A-J00	**C2N021**
06430-S7S-000	**C2N021**
06430-S9A-000	**C2N061**
06430-S9A-010	**C2N061**
06430-SAA-J50	**C2N022**
06430-SCV-A00	**C2N021**
06430-SED-000	**C2N021**
06430-SED-E50	**C2N021**
06430-SFE-J00	**SN436P**
06430-SFE-N00	**SN436P**
06430-SJA-000	**SN439P**
06430-SLJ-000	**SN436P**
06450-S0A-J00	**C1N018**
06450-S0A-J10	**SN430P**
06450-S0K-000	**C1N026**
06450-S0K-J01	**C1N026**
06450-S0K-J02	**C1N026**
06450-S0K-J11	**C1N018**
06450-S2A-000	**SN434P**
06450-S2A-E10	**SN434P**
06450-S2A-E50	**SN434P**
06450-S2G-000	**C1N020**
06450-S2G-J01	**C1N020**
06450-S2H-J00	**C1N018**
06450-S2K-J00	**SN569P**
06450-S3A-J00	**SN569P**
06450-S3N-J00	**C1N026**
06450-S3Y-A10	**SN424P**
06450-S5A-010	**C1N020**
06450-S5A-J00	**C1N016**
06450-S5B-J00	**SN437P**
06450-S5D-A00	**C1N035**
06450-S5D-A01	**C1N035**
06450-S6M-A00	**SN434P**
06450-S7A-J00	**C1N016**
06450-S7A-N00	**C1N030**
06450-S7H-000	**C1N020**
06450-S7S-000	**C1N018**
06450-S82-A00	**C1N034**
06450-S84-G00	**C1N018**
06450-S87-A00	**C1N018**

Genuine No.	ADVICS No.
06450-S9A-000	**C1N037**
06450-S9A-010	**C1N037**
06450-S9A-A00	**C1N031**
06450-S9A-A01	**C1N031**
06450-SAA-000	**SN424P**
06450-SAA-900	**C1N020**
06450-SAA-901	**C1N020**
06450-SAP-000	**SN432P**
06450-SCV-A00	**C1N031**
06450-SCV-A02	**C1N031**
06450-SDD-A00	**SN435P**
06450-SDD-A10	**SN435P**
06450-SEA-J00	**C1N026**
06450-SEA-J01	**C1N026**
06450-SEA-J10	**C1N026**
06450-SEL-T00	**C1N020**
06450-SEL-T01	**C1N020**
06450-SFA-000	**SN569P**
06450-SFC-000	**SN124P**
06450-SFE-J10	**SN435P**
06450-SFE-J20	**C1N026**
06450-SJK-000	**C1N042**
06450-SJK-010	**C1N042**
06450-SNB-000	**SN443P**
064A5-SB0-670	**SN424P**
064A5-SB2-670	**SN424P**
43022-S04-000	**C2N022**
43022-S04-010	**C2N022**
43022-S04-020	**C2N022**
43022-S04-030	**C2N022**
43022-S04-E00	**C2N022**
43022-S04-E01	**C2N022**
43022-S2A-000	**C2N015**
43022-S3N-000	**C2N021**
43022-S5A-J00	**C2N015**
43022-S6D-000	**C2N015**
43022-S6D-E50	**C2N015**
43022-S7S-010	**C2N021**
43022-S9A-000	**C2N061**
43022-S9A-010	**C2N061**
43022-S9A-A00	**C2N061**
43022-SAA-J50	**C2N022**
43022-SCV-A00	**C2N021**
43022-SD2-307	**C2N022**
43022-SD2-317	**C2N022**
43022-SD2-A00	**C2N022**
43022-SD2-A01	**C2N022**
43022-SED-000	**C2N021**
43022-SED-E50	**C2N021**
43022-SF1-505	**C2N022**

Genuine No.	ADVICS No.
43022-SF1-515	**C2N022**
43022-SF1-525	**C2N022**
43022-SFE-000	**SN436P**
43022-SFE-N00	**SN436P**
43022-SG0-010	**C2N015**
43022-SG0-020	**C2N015**
43022-SG0-505	**C2N015**
43022-SH3-305	**C2N022**
43022-SH3-507	**C2N022**
43022-SH3-930	**C2N022**
43022-SH3-931	**C2N022**
43022-SH3-932	**C2N022**
43022-SH3-G00	**C2N022**
43022-SH3-G01	**C2N022**
43022-SH3-J00	**C2N022**
43022-SH3-N30	**C2N022**
43022-SJA-000	**SN439P**
43022-SJA-J00	**SN439P**
43022-SJA-J01	**SN439P**
43022-SJF-000	**C2N021**
43022-SL5-000	**C2N015**
43022-SL5-305	**C2N015**
43022-SL5-505	**C2N015**
43022-SL5-515	**C2N015**
43022-SL5-525	**C2N015**
43022-SM4-305	**C2N015**
43022-SM4-505	**C2N015**
43022-SM4-515	**C2N015**
43022-SM4-525	**C2N015**
43022-SM4-950	**C2N015**
43022-SM4-G00	**C2N015**
43022-SM5-A00	**C2N015**
43022-SMA-000	**SN436P**
43022-SN7-000	**C2N015**
43022-SP0-000	**C2N021**
43022-SP0-010	**C2N021**
43022-SP0-020	**C2N021**
43022-SP0-305	**C2N021**
43022-SP0-E00	**C2N021**
43022-SP0-E01	**C2N021**
43022-SR2-000	**C2N022**
43022-SR2-010	**C2N022**
43022-SR2-030	**C2N022**
43022-SR3-000	**C2N022**
43022-SR3-010	**C2N022**
43022-SR3-020	**C2N022**
43022-SR3-030	**C2N022**
43022-SR3-305	**C2N022**
43022-SR3-G00	**C2N022**
43022-SR3-G01	**C2N022**

Genuine No.	ADVICS No.
43022-SS1-000	**C2N022**
43022-SS1-010	**C2N022**
43022-SS1-020	**C2N022**
43022-ST3-E00	**C2N022**
43022-ST7-000	**C2N022**
43022-ST7-A00	**C2N022**
43022-SV4-000	**C2N015**
43022-SV4-010	**C2N015**
43022-SV4-020	**C2N015**
43022-SV4-030	**C2N015**
43022-SV4-305	**C2N015**
43022-SV4-A00	**C2N015**
43022-SV4-A01	**C2N015**
43022-SV4-A02	**C2N015**
43022-SV4-A20	**C2N015**
43022-SV4-A21	**C2N015**
43022-SV4-A22	**C2N015**
43022-SV4-G00	**C2N015**
43022-SV4-G01	**C2N015**
43022-SV4-G02	**C2N015**
43022-SV4-G20	**C2N015**
43022-SV4-G21	**C2N015**
43022-SV4-G22	**C2N015**
43022-SX0-A50	**C2N021**
43022-SX0-A51	**C2N021**
43022-SX0-A52	**C2N021**
43022-SY8-A00	**C2N015**
43022-SY8-A01	**C2N015**
43022-SYP-000	**SN436P**
43022-SZ3-A00	**C2N021**
43022-SZ3-A01	**C2N021**
43022-T2J-H00	**★C2N139**
43022-T2J-H01	**★C2N139**
43022-T6C-J00	**★C2N139**
43022-TAD-J00	**★C2N139**
43022-TP6-A00	**C2N061**
45022-S01-A00	**C1N035**
45022-S01-A01	**C1N035**
45022-S04-000	**C1N020**
45022-S04-010	**C1N020**
45022-S04-020	**C1N020**
45022-S04-408	**C1N016**
45022-S04-409	**C1N020**
45022-S04-910	**SN424P**
45022-S04-911	**SN424P**
45022-S04-912	**SN424P**
45022-S04-G00	**C1N020**
45022-S04-G02	**C1N020**
45022-S04-J00	**C1N020**
45022-S04-J01	**C1N020**

★Planed to sell in FY2020

Genuine No.	ADVICS No.
45022-S04-J02	**C1N020**
45022-S04-V00	**C1N016**
45022-S04-V01	**C1N016**
45022-S04-V02	**C1N016**
45022-S04-V10	**C1N016**
45022-S04-V11	**C1N016**
45022-S04-V12	**C1N016**
45022-S07-000	**C1N020**
45022-S07-010	**C1N020**
45022-S07-020	**C1N020**
45022-S07-030	**C1N020**
45022-S07-408	**C1N020**
45022-S0A-940	**SN430P**
45022-S0A-941	**SN430P**
45022-S0A-942	**SN430P**
45022-S0A-J10	**SN430P**
45022-S0A-J20	**C1N026**
45022-S0K-000	**C1N026**
45022-S0K-A01	**C1N026**
45022-S0K-A11	**C1N026**
45022-S0X-030	**SN110**
45022-S0X-040	**SN110**
45022-S0X-405	**SN110**
45022-S0X-A00	**SN110**
45022-S10-000	**C1N035**
45022-S10-010	**C1N035**
45022-S10-020	**C1N035**
45022-S10-A00	**C1N018**
45022-S10-A01	**C1N018**
45022-S10-A02	**C1N018**
45022-S10-A11	**C1N018**
45022-S10-G00	**C1N018**
45022-S10-G01	**C1N018**
45022-S10-G02	**C1N018**
45022-S1A-E20	**C1N018**
45022-S2A-000	**SN434P**
45022-S2A-E10	**SN434P**
45022-S2A-E50	**SN434P**
45022-S2G-000	**C1N020**
45022-S2K-000	**SN569P**
45022-S30-408	**SN428P**
45022-S30-409	**C1N018**
45022-S30-A00	**C1N018**
45022-S30-A01	**C1N018**
45022-S30-A02	**C1N018**
45022-S30-G10	**SN428P**
45022-S30-J00	**SN428P**
45022-S30-J01	**SN428P**
45022-S30-J02	**SN428P**
45022-S3A-000	**SN569P**

Genuine No.	ADVICS No.
45022-S3N-000	**C1N026**
45022-S3V-A10	**C1N042**
45022-S3V-A11	**C1N042**
45022-S3Y-A10	**SN424P**
45022-S47-000	**C1N018**
45022-S47-010	**C1N018**
45022-S47-020	**C1N018**
45022-S47-408	**C1N018**
45022-S50-000	**SN424P**
45022-S50-J50	**SN424P**
45022-S5A-010	**C1N020**
45022-S5A-G00	**C1N016**
45022-S5A-J00	**C1N016**
45022-S5B-J00	**SN437P**
45022-S5D-A00	**C1N035**
45022-S5D-A01	**C1N035**
45022-S5D-H00	**C1N035**
45022-S6D-H00	**C1N035**
45022-S6M-A00	**SN434P**
45022-S70-000	**C1N018**
45022-S70-010	**C1N018**
45022-S70-020	**C1N018**
45022-S7A-000	**C1N016**
45022-S7A-E50	**C1N030**
45022-S7A-N00	**C1N030**
45022-S7H-000	**C1N020**
45022-S84-A00	**C1N035**
45022-S87-A01	**C1N018**
45022-S9A-000	**C1N037**
45022-S9A-A01	**C1N031**
45022-S9A-E00	**C1N031**
45022-S9A-E60	**C1N031**
45022-SA5-000	**C1N004**
45022-SA5-010	**C1N004**
45022-SA5-020	**C1N004**
45022-SA7-020	**SN414**
45022-SA7-030	**SN414**
45022-SA7-950	**C1N004**
45022-SA7-951	**C1N004**
45022-SAA-000	**SN424P**
45022-SAA-900	**C1N020**
45022-SAA-901	**C1N020**
45022-SAA-G00	**C1N020**
45022-SAP-000	**SN432P**
45022-SB0-505	**SN424P**
45022-SB0-506	**SN424P**
45022-SB0-670	**C1N004**
45022-SB0-671	**SN424P**
45022-SB0-672	**SN424P**
45022-SB2-505	**SN424P**

Genuine No.	ADVICS No.
45022-SB2-506	**C1N004**
45022-SB2-516	**C1N004**
45022-SB2-526	**C1N004**
45022-SB2-670	**SN424P**
45022-SB2-671	**SN424P**
45022-SB2-672	**SN424P**
45022-SB2-673	**SN424P**
45022-SB2-674	**SN424P**
45022-SB2-675	**SN424P**
45022-SB2-930	**C1N004**
45022-SB2-931	**C1N004**
45022-SB2-A00	**SN424P**
45022-SB2-A01	**SN424P**
45022-SB2-G00	**C1N033**
45022-SB6-000	**C1N004**
45022-SB7-A01	**C1N035**
45022-SC2-020	**SN422**
45022-SC2-040	**SN414**
45022-SC2-050	**SN414**
45022-SCC-000	**C1N016**
45022-SCV-A00	**C1N031**
45022-SD2-505	**C1N033**
45022-SD2-506	**C1N033**
45022-SD2-507	**C1N004**
45022-SD2-509	**C1N033**
45022-SD2-517	**C1N004**
45022-SD2-518	**C1N033**
45022-SD2-519	**C1N033**
45022-SD2-527	**C1N004**
45022-SD2-528	**C1N033**
45022-SD2-529	**C1N033**
45022-SD2-A00	**C1N033**
45022-SD2-A01	**C1N033**
45022-SD2-A02	**C1N033**
45022-SD2-A03	**C1N033**
45022-SD2-A10	**C1N033**
45022-SD2-A11	**C1N033**
45022-SD2-A12	**C1N033**
45022-SD2-A13	**C1N033**
45022-SD2-J00	**C1N004**
45022-SD2-J01	**C1N004**
45022-SD2-J02	**C1N004**
45022-SD4-000	**C1N013**
45022-SD4-010	**C1N013**
45022-SD4-020	**C1N013**
45022-SD4-305	**C1N013**
45022-SD4-408	**C1N013**
45022-SD4-508	**C1N013**
45022-SD4-518	**C1N013**
45022-SD4-528	**C1N013**

Genuine No.	ADVICS No.
45022-SD4-A10	**C1N013**
45022-SD4-A11	**C1N013**
45022-SD4-A12	**C1N013**
45022-SD4-A13	**C1N013**
45022-SD4-E00	**C1N013**
45022-SD4-J00	**C1N013**
45022-SD5-030	**SN414**
45022-SD5-040	**SN422**
45022-SD5-050	**SN414**
45022-SD5-060	**SN422**
45022-SD5-305	**SN414**
45022-SD5-408	**SN414**
45022-SDA-A00	**C1N031**
45022-SDB-A00	**SN435P**
45022-SDC-A00	**C1N031**
45022-SDC-A10	**C1N031**
45022-SDD-A00	**SN435P**
45022-SDD-A10	**SN435P**
45022-SDR-A00	**C1N031**
45022-SE0-305	**C1N033**
45022-SE0-306	**C1N033**
45022-SE0-307	**C1N033**
45022-SE0-315	**C1N033**
45022-SE0-325	**C1N033**
45022-SE0-408	**C1N033**
45022-SE0-505	**C1N033**
45022-SE0-507	**C1N033**
45022-SE0-508	**C1N013**
45022-SE0-517	**C1N033**
45022-SE0-527	**C1N033**
45022-SE0-528	**C1N013**
45022-SE0-910	**C1N033**
45022-SE0-911	**C1N033**
45022-SE0-912	**C1N033**
45022-SE0-930	**C1N033**
45022-SE0-931	**C1N033**
45022-SE0-932	**C1N033**
45022-SE0-A00	**C1N033**
45022-SE0-A01	**C1N033**
45022-SE0-A10	**C1N033**
45022-SE0-A11	**C1N033**
45022-SE0-A12	**C1N033**
45022-SE0-G00	**C1N033**
45022-SE0-G10	**C1N013**
45022-SE1-505	**C1N033**
45022-SE1-910	**C1N033**
45022-SE1-911	**C1N033**
45022-SEA-E01	**C1N083**
45022-SEA-J00	**C1N026**
45022-SEA-J01	**C1N026**

Genuine No.	ADVICS No.
45022-SEA-J11	**C1N026**
45022-SEL-T01	**C1N020**
45022-SEL-T02	**C1N020**
45022-SEN-H00	**C1N020**
45022-SF0-601	**C1N004**
45022-SF1-000	**SN410P**
45022-SF1-010	**SN410P**
45022-SF1-020	**SN410P**
45022-SF1-023	**SN410P**
45022-SF1-305	**SN410P**
45022-SF1-408	**SN410P**
45022-SF1-409	**SN410P**
45022-SF1-505	**SN410P**
45022-SF1-506	**SN410P**
45022-SF1-515	**SN410P**
45022-SF1-516	**SN410P**
45022-SF1-525	**SN410P**
45022-SF1-526	**SN410P**
45022-SF4-000	**SN414**
45022-SF4-010	**SN414**
45022-SF4-020	**SN414**
45022-SF4-030	**SN414**
45022-SF4-040	**SN414**
45022-SF4-050	**SN414**
45022-SF4-060	**SN414**
45022-SF4-J20	**C1N004**
45022-SF4-J21	**C1N004**
45022-SF4-J22	**C1N004**
45022-SF4-J23	**C1N004**
45022-SF9-305	**C1N013**
45022-SF9-505	**C1N013**
45022-SF9-515	**C1N013**
45022-SF9-525	**C1N013**
45022-SFA-000	**SN569P**
45022-SFC-000	**SN124P**
45022-SFE-J10	**SN435P**
45022-SFE-J20	**C1N026**
45022-SG0-000	**C1N013**
45022-SG0-010	**C1N013**
45022-SG0-020	**C1N013**
45022-SG0-305	**C1N013**
45022-SG0-315	**C1N013**
45022-SG0-325	**C1N013**
45022-SG0-335	**C1N013**
45022-SG0-517	**C1N013**
45022-SG0-527	**C1N013**
45022-SG0-G10	**C1N013**
45022-SG0-G11	**C1N013**
45022-SG0-J00	**C1N013**
45022-SH2-505	**SN424P**

Genuine No.	ADVICS No.
45022-SH2-A00	**SN424P**
45022-SH2-A01	**SN424P**
45022-SH2-A02	**SN424P**
45022-SH3-000	**C1N004**
45022-SH3-010	**C1N004**
45022-SH3-305	**C1N004**
45022-SH3-317	**SN410P**
45022-SH3-325	**C1N004**
45022-SH3-505	**SN410P**
45022-SH3-506	**C1N004**
45022-SH3-508	**C1N004**
45022-SH3-515	**SN410P**
45022-SH3-930	**SN410P**
45022-SH3-931	**SN410P**
45022-SH3-932	**SN410P**
45022-SH3-933	**SN410P**
45022-SH3-934	**SN410P**
45022-SH3-C02	**C1N004**
45022-SH3-G00	**C1N004**
45022-SH3-G01	**C1N004**
45022-SH3-G02	**C1N004**
45022-SH3-G03	**C1N004**
45022-SH3-G30	**SN410P**
45022-SH3-G31	**SN410P**
45022-SH3-G32	**SN410P**
45022-SH3-G33	**SN410P**
45022-SH3-G50	**C1N004**
45022-SH3-N30	**C1N013**
45022-SHJ-A00	**C1N048**
45022-SHJ-A50	**C1N048**
45022-SJ6-000	**SN414**
45022-SJ6-010	**SN414**
45022-SJ6-020	**SN414**
45022-SJ6-030	**SN414**
45022-SJ6-040	**SN414**
45022-SJ6-050	**SN414**
45022-SJ6-305	**SN414**
45022-SJ6-315	**SN414**
45022-SJ6-325	**SN414**
45022-SJ6-J00	**SN414**
45022-SJ6-J01	**SN414**
45022-SJ6-J02	**SN414**
45022-SJA-010	**C1N044**
45022-SJA-020	**C1N044**
45022-SJA-030	**C1N044**
45022-SJA-040	**C1N044**
45022-SJA-305	**C1N044**
45022-SJF-J00	**C1N030**
45022-SJK-010	**C1N042**
45022-SJK-020	**C1N042**

Genuine No.	ADVICS No.
45022-SJK-030	**C1N042**
45022-SJK-040	**C1N042**
45022-SK7-000	**C1N013**
45022-SK7-010	**C1N013**
45022-SK7-305	**C1N013**
45022-SK7-505	**C1N013**
45022-SK7-506	**C1N013**
45022-SK7-516	**C1N013**
45022-SK7-526	**C1N013**
45022-SL0-010	**C1N018**
45022-SL0-020	**C1N018**
45022-SL0-G00	**C1N018**
45022-SL0-G01	**C1N018**
45022-SL0-G02	**C1N018**
45022-SL0-J00	**C1N018**
45022-SL0-J01	**C1N018**
45022-SL0-J02	**C1N018**
45022-SL0-N00	**C1N018**
45022-SL0-N10	**C1N018**
45022-SL5-000	**SN428P**
45022-SL5-010	**SN428P**
45022-SL5-020	**SN428P**
45022-SL5-408	**SN428P**
45022-SM2-000	**SN418P**
45022-SM2-010	**SN418P**
45022-SM2-020	**SN418P**
45022-SM2-030	**SN418P**
45022-SM2-305	**SN418P**
45022-SM2-408	**SN418P**
45022-SM2-505	**SN418P**
45022-SM2-515	**SN418P**
45022-SM2-525	**SN418P**
45022-SM4-408	**C1N034**
45022-SM4-507	**C1N034**
45022-SM4-A00	**C1N034**
45022-SM4-A01	**C1N034**
45022-SM5-000	**C1N018**
45022-SM5-305	**C1N018**
45022-SM5-505	**C1N018**
45022-SM5-515	**C1N018**
45022-SM5-525	**C1N018**
45022-SM5-A00	**C1N018**
45022-SMA-000	**SN435P**
45022-SMG-E01	**C1N085**
45022-SN7-G40	**SN428P**
45022-SN7-G41	**SN428P**
45022-SN7-G42	**SN428P**
45022-SN7-G50	**C1N018**
45022-SN7-Y40	**SN428P**
45022-SNB-000	**SN443P**

Genuine No.	ADVICS No.
45022-SP0-000	**C1N018**
45022-SP0-010	**C1N018**
45022-SP0-408	**C1N018**
45022-SP0-506	**C1N018**
45022-SP0-516	**C1N018**
45022-SP0-526	**C1N018**
45022-SP0-A00	**C1N018**
45022-SR3-000	**C1N020**
45022-SR3-306	**C1N013**
45022-SR3-408	**SN424P**
45022-SR3-409	**C1N013**
45022-SR3-505	**SN424P**
45022-SR3-506	**SN424P**
45022-SR3-507	**C1N013**
45022-SR3-516	**SN424P**
45022-SR3-910	**SN424P**
45022-SR3-920	**SN424P**
45022-SR3-G00	**C1N020**
45022-SR3-G01	**C1N020**
45022-SR3-N30	**C1N013**
45022-SR3-N31	**C1N013**
45022-SR3-V00	**C1N016**
45022-SR3-V01	**C1N016**
45022-SR3-V02	**C1N016**
45022-SR3-V03	**C1N016**
45022-SR3-V10	**C1N016**
45022-SR3-V11	**C1N016**
45022-SR3-V12	**C1N016**
45022-SR7-000	**C1N020**
45022-SR7-010	**C1N020**
45022-SS0-000	**SN428P**
45022-SS0-305	**C1N018**
45022-SS0-408	**C1N018**
45022-SS0-409	**C1N018**
45022-SS0-505	**SN428P**
45022-SS0-508	**SN428P**
45022-SS0-515	**SN428P**
45022-SS0-525	**SN428P**
45022-SS0-A00	**C1N018**
45022-SS0-A01	**C1N018**
45022-SS0-A02	**C1N018**
45022-SS0-G00	**C1N018**
45022-SS0-G01	**C1N018**
45022-SS0-G02	**C1N018**
45022-SS0-G10	**SN428P**
45022-SS2-408	**SN428P**
45022-ST5-000	**SN569P**
45022-ST5-010	**SN569P**
45022-ST5-020	**SN569P**
45022-ST5-405	**SN569P**

Genuine No.	ADVICS No.
45022-ST5-408	**SN569P**
45022-ST7-000	**C1N024**
45022-ST7-010	**C1N024**
45022-ST7-020	**C1N024**
45022-ST7-406	**C1N024**
45022-ST7-408	**C1N020**
45022-ST7-409	**C1N024**
45022-ST7-A00	**C1N024**
45022-ST7-J00	**C1N020**
45022-ST7-J01	**C1N020**
45022-ST7-J02	**C1N020**
45022-ST7-R00	**C1N018**
45022-ST7-R01	**C1N018**
45022-ST7-R02	**C1N018**
45022-SV4-000	**SN418P**
45022-SV4-010	**SN418P**
45022-SV4-020	**SN418P**
45022-SV4-408	**SN418P**
45022-SV5-A00	**C1N018**
45022-SW3-000	**SN418P**
45022-SX0-J00	**C1N018**
45022-SX0-J01	**C1N018**
45022-SX0-J02	**C1N018**
45022-SX8-T01	**SN424P**
45022-SY8-A00	**C1N034**
45022-SY8-A01	**C1N034**
45022-SZ3-000	**C1N026**
45022-SZ3-A00	**C1N026**
45022-SZ3-G00	**C1N026**
45022-SZH-000	**SN414**
45022-TE0-A60	**C1N026**
45022-TK6-A00	**C1N077**
H4302-S04-003	**C2N022**
H4302-SM4-003	**C2N015**
H4302-SS1-003	**C2N022**
H4302-SV4-003	**C2N015**
H4302-SZ3-003	**C2N021**
H4502-S04-003	**C1N016**
H4502-S07-003	**C1N020**
H4502-S0A-003	**SN430P**
H4502-S10-003	**C1N035**
H4502-S30-003	**SN428P**
H4502-S30-901	**C1N018**
H4502-S3A-003	**SN569P**
H4502-S50-003	**SN424P**
H4502-S70-003	**C1N018**
H4502-SAA-003	**SN424P**
H4502-SAA-004	**SN424P**
H4502-SE0-003	**C1N033**
H4502-SEC-000	**SN124P**

SUBARU

Genuine No.	ADVICS No.
H4502-SF9-003	**C1N013**
H4502-SH3-003	**SN410P**
H4502-SJ6-003	**SN414**
H4502-SR3-003	**C1N013**
H4502-ST5-003	**SN569P**
H4502-ST7-003	**C1N024**
H4502-SV4-901	**SN418P**
H4502-SZ3-003	**C1N026**

Genuine No.	ADVICS No.
25191GA560	**F1N008**
25191GA720	**F1N008**
25191GA740	**F1N008**
25191GA840	**F1N008**
25191GA841	**F1N008**
25191GA930	**F1N008**
25193GA130	**F1N008**
26290KA060	**SN766**
26290KA061	**SN766**
26290KA110	**SN766**
26290KA120	**SN766**
26290KA150	**SN766**
26290KC000	**SN658**
26290KC020	**SN658**
26290KC070	**SN658**
26290TA000	**F1N003**
26290TA070	**F1N003**
26290TA071	**F1N003**
26290TA090	**F1N003**
26296AA000	**SN794P**
26296AA020	**SN794P**
26296AA040	**F1N011**
26296AA041	**F1N011**
26296AA060	**F2N012**
26296AA061	**F2N012**
26296AA062	**F2N012**
26296AA080	**F2N012**
26296AA081	**F2N012**
26296AA082	**F2N012**
26296AA100	**SN794P**
26296AA101	**SN794P**
26296AA120	**SN794P**
26296AA121	**SN794P**
26296AA141	**SN794P**
26296AA142	**SN794P**
26296AA143	**SN794P**
26296AA160	**SN794P**
26296AA161	**SN794P**
26296AA162	**SN794P**
26296AA163	**SN794P**
26296AA180	**F1N011**
26296AA181	**F1N011**
26296AA182	**F1N011**
26296AA183	**F1N011**
26296AC000	**F1N014**
26296AC010	**F1N014**
26296AC011	**F1N014**
26296AC020	**F1N014**
26296AC021	**F1N014**
26296AC030	**F1N013**

Genuine No.	ADVICS No.
26296AC040	**F1N013**
26296AC041	**F1N013**
26296AC050	**F1N013**
26296AC060	**F1N013**
26296AC070	**F1N013**
26296AC080	**F1N014**
26296AC090	**F1N014**
26296AC200	**F1N013**
26296AE000	**F1N014**
26296AE001	**F1N014**
26296AE002	**F1N014**
26296AE020	**F1N013**
26296AE040	**F1N014**
26296AE080	**F1N013**
26296AE081	**F1N013**
26296AE100	**F1N013**
26296AE120	**SN109P**
26296AE121	**SN109P**
26296AE140	**F1N013**
26296AE141	**F1N013**
26296AE150	**F1N020**
26296AE160	**F1N042**
26296AE190	**F1N020**
26296AE200	**F1N020**
26296AE210	**F1N013**
26296AE220	**F1N013**
26296AG000	**F1N019**
26296AG030	**F1N019**
26296AG050	**F1N019**
26296FA000	**SN794P**
26296FA001	**SN794P**
26296FA020	**SN794P**
26296FA021	**SN794P**
26296FA022	**SN794P**
26296FA040	**F1N011**
26296FA041	**F1N011**
26296FA100	**SN109P**
26296FA101	**SN109P**
26296FA102	**SN109P**
26296FA140	**SN109P**
26296FA170	**SN109P**
26296FE000	**F1N042**
26296FE020	**F1N042**
26296FE070	**SN109P**
26296FE080	**F1N018**
26296FE081	**F1N018**
26296FE082	**F1N018**
26296FE090	**SN109P**
26296FG000	**F1N020**
26296FG001	**F1N020**

Genuine No.	ADVICS No.
26296FG010	**F1N042**
26296KE000	**F1N005**
26296KE010	**F1N005**
26296KE020	**F1N005**
26296KG000	**SN693**
26296PA040	**F2N012**
26296PA060	**F2N012**
26296SA000	**F1N042**
26296SA011	**F1N042**
26296SA020	**F1N042**
26296SA030	**F1N042**
26296SC000	**F1N018**
26296SC010	**F1N018**
26296TC000	**SN681**
26296TC001	**SN681**
26296TC010	**SN681P**
26296TC011	**SN681P**
26296TC020	**SN681**
26296TC030	**SN681**
26296TC040	**SN681**
26296TC050	**SN681P**
26296TC060	**SN432P**
26296TC070	**SN441P**
26296TC080	**SN441P**
26296TC090	**SN441P**
26296XA000	**F1N019**
26296XA010	**F1N019**
26696AE000	**F2N015**
26696AE020	**F2N015**
26696AE040	**F2N015**
26696AE080	**F2N015**
26696AG000	**F2N022**
26696AG010	**F2N022**
26696AG020	**F2N015**
26696AG030	**F2N022**
26696AG031	**F2N022**
26696AG050	**F2N022**
26696AG051	**F2N022**
26696AL000	**★F2N044**
26696FA010	**F2N015**
26696FA030	**F2N015**
26696FC000	**F2N015**
26696FC001	**F2N015**
26696FC002	**F2N015**
26696FE040	**F2N016**
26696FE050	**F2N016**
26696KE000	**B2N026**
26696XA000	**F2N037**
SU003-04089	**F1N018**
SU003-04096	**F2N022**

★Planed to sell in FY2020

Genuine No.	ADVICS No.
SU003-04324	**F1N018**

Genuine No.	ADVICS No.
04465-25020	**SN650**
04465-25080	**SN650**
04465-28340	**A1N096**
04465-28360	**SN851P**
04465-28370	**A1N096**
04465-28380	**A1N096**
04465-28381	**A1N096**
04465-28390	**SN851P**
04465-28420	**A1N096**
04465-33021	**A1N048**
04465-33180	**A1N097**
04465-33210	**A1N048**
04465-33240	**A1N073**
04465-33440	**A1N154**
04465-33450	**A1N154**
04465-36030	**A1N100**
04465-36080	**A1N100**
04465-36090	**A1N100**
04465-37010	**A1N060**
04465-37020	**A1N102**
04465-37030	**A1N060**
04465-37040	**A1N100**
04465-37060	**A1N102**
04465-97201	**G1N018**
04465-B1010	**SN910P**
04465-B1020	**SN949P**
04465-B1050	**SN943P**
04465-B1100	**SN949P**
04465-B1170	**SN949P**
04465-B1350	**A1N155**
04465-B1360	**SN939**
04465-B1380	**SN949P**
04465-B2010	**D1N046**
04465-B2020	**SN910P**
04465-B2030	**D1N046**
04465-B2090	**SN910P**
04465-B2100	**D1N046**
04465-B4010	**G1N005**
04465-B4020	**G1N005**
04465-B4030	**G1N005**
04465-B4040	**G1N005**
04465-B5020	**SN103P**
04465-B5030	**SN145P**
04465-B5040	**SN233**
04465-B5050	**SN145P**
04465-B5051	**SN145P**
04465-B5052	**SN145P**
04466-32030	**A2N066**
04466-33050	**SN648P**
04466-33090	**A2N104**

Genuine No.	ADVICS No.
04466-33160	**A2N130**
04466-33170	**A2N104**
04466-33180	**A2N130**
04491-28091-000	**A1N078**
04491-28260-000	**A1N078**
04491-28290-000	**SN827P**
04491-28330-000	**SN827P**
04491-28370-000	**SN827P**
04491-28380-000	**SN826P**
04491-87101-000	**SN623P**
04491-87102-000	**SN623P**
04491-87103-000	**SN623P**
04491-87104-000	**SN623P**
04491-87105-000	**SN623P**
04491-87108-000	**SN623P**
04491-87109-000	**SN623P**
04491-87110-000	**SN623P**
04491-87111-000	**SN623P**
04491-87112-000	**SN623P**
04491-87113-000	**SN623P**
04491-87203-000	**SN233**
04491-87204-000	**G1N019**
04491-87205-000	**G1N019**
04491-87206-000	**G1N019**
04491-87207-000	**G1N019**
04491-87208-000	**SN233**
04491-87209-000	**G1N019**
04491-87210-000	**G1N015**
04491-87212-000	**SN233**
04491-87213-000	**G1N019**
04491-87215-000	**G1N015**
04491-87216-000	**G1N019**
04491-87217-000	**G1N019**
04491-87218-000	**G1N019**
04491-87219-000	**G1N015**
04491-87222-000	**SN233**
04491-87223-000	**SN233**
04491-87225-000	**SN233**
04491-87226-000	**G1N015**
04491-87227-000	**SN233**
04491-87228-000	**G1N019**
04491-87229-000	**G1N019**
04491-87230-000	**G1N015**
04491-87231-000	**G1N019**
04491-87233-000	**SN233**
04491-87401-000	**G1N005**
04491-87402-000	**G1N005**
04491-87403-000	**G1N005**
04491-87404-000	**G1N005**
04491-87501-000	**SN233**

Genuine No.	ADVICS No.
04491-87503-000	**SN233**
04491-87506-000	**SN284P**
04491-87507-000	**G1N011**
04491-87509-000	**G1N011**
04491-87510-000	**SN233**
04491-87511	**SN233**
04491-87511-000	**SN233**
04491-87514-000	**G1N011**
04491-87705-000	**SN625P**
04491-87706-000	**SN623P**
04491-87707-000	**SN623P**
04491-87708-000	**SN623P**
04491-87709-000	**SN625P**
04491-87710-000	**SN623P**
04491-87711-000	**SN623P**
04491-87712-000	**SN623P**
04491-87714-000	**SN625P**
04491-87715-000	**SN623P**
04491-87720-000	**SN625P**
04491-87723-000	**SN625P**
04491-87724-000	**G1N017**
04491-87725-000	**SN835**
04491-87727-000	**SN835**
04491-87728-000	**G1N017**
04491-87729-000	**A1N078**
04491-97201	**G1N018**
04491-97201-000	**G1N018**
04491-97202-000	**SN103P**
04491-97203-000	**D1N046**
04491-97204-000	**G1N018**
04491-97205	**G1N018**
04491-97205-000	**G1N018**
04491-97206-000	**D1N046**
04491-97207-000	**G1N006**
04491-97209-000	**D1N046**
04491-97210-000	**SN910P**
04491-97211-000	**D1N046**
04491-97216-000	**G1N006**
04491-97218-000	**D1N046**
04491-97401	**G1N018**
04491-97401-000	**G1N018**
04491-97402	**G1N006**
04491-97402-000	**G1N006**
04491-97404-000	**G1N006**
04491-97501-000	**SN103P**
04491-97502-000	**SN676P**
04491-97503-000	**G1N011**
04491-97505	**G1N011**
04491-97505-000	**G1N011**
04491-97506-000	**SN103P**

Genuine No.	ADVICS No.
04491-97507	**SN902P**
04491-97507-000	**SN902P**
04491-B1010-000	**SN910P**
04491-B5010-000	**SN145P**
04491-L510S-000	**G1N019**
04492-87101-000	**G2N010**
04492-87102-000	**G2N010**
04492-87201-000	**E2N032**
04492-87202-000	**E2N032**
04492-87705-000	**E2N032**
04492-87706-000	**E2N032**
04492-87707-000	**E2N032**

SUZUKI

Genuine No.	ADVICS No.
52210-70B00	**H1N005**
53210-56810	**H1N058**
53210-56820	**H1N059**
55110-70A00	**H1N011**
55110-77501	**C1N004**
55110-80000	**H1N011**
55110-80010	**H1N011**
55110-80020	**H1N011**
55180-75F00	**H1N020**
55200-50850	**H1N005**
55200-50860	**SN627**
55200-50870	**H1N014**
55200-50872	**H1N014**
55200-50FA0	**H1N006**
55200-51810	**SN535P**
55200-56810	**H1N059**
55200-56820	**H1N059**
55200-56830	**H1N059**
55200-56831	**H1N059**
55200-56870	**H1N059**
55200-56871	**H1N059**
55200-56B41	**H1N059**
55200-60280	**H1N058**
55200-60810	**H1N058**
55200-60811	**H1N058**
55200-60820	**H1N058**
55200-60821	**H1N058**
55200-60830	**H1N058**
55200-60831	**H1N058**
55200-60832	**H1N058**
55200-60860	**H1N006**
55200-60870	**SN535P**
55200-60880	**H1N006**
55200-60A40	**H1N058**
55200-60A41	**H1N058**
55200-61810	**SN760P**
55200-61832	**SN652P**
55200-61840	**SN760P**
55200-61850	**SN535P**
55200-61860	**H1N006**
55200-61870	**H1N058**
55200-61880	**SN535P**
55200-61890	**SN535P**
55200-62810	**SN760P**
55200-62830	**SN760P**
55200-62840	**SN535P**
55200-62850	**SN652P**
55200-62851	**SN652P**
55200-62852	**SN652P**
55200-62860	**SN760P**

Genuine No.	ADVICS No.
55200-62870	**H1N006**
55200-62871	**H1N006**
55200-62872	**H1N006**
55200-62873	**H1N006**
55200-62874	**H1N006**
55200-62880	**H1N058**
55200-62890	**H1N058**
55200-62G60	**SN760P**
55200-63810	**H1N058**
55200-63811	**H1N058**
55200-63820	**H1N058**
55200-65D00	**H1N059**
55200-65D01	**H1N059**
55200-65D10	**H1N001**
55200-65D11	**H1N001**
55200-65D21	**H1N059**
55200-65D31	**H1N001**
55200-65D50	**H1N001**
55200-65DA0	**H1N001**
55200-65DA1	**H1N001**
55200-65DB0	**H1N001**
55200-65DB1	**H1N001**
55200-65DB2	**H1N001**
55200-65J00	**H1N040**
55200-65J01	**H1N040**
55200-65J02	**H1N040**
55200-65J03	**H1N040**
55200-65J10	**H1N040**
55200-65J20	**H1N040**
55200-65J21	**H1N040**
55200-65J22	**H1N040**
55200-65J23	**H1N040**
55200-65J30	**H1N040**
55200-65JA0	**H1N040**
55200-67D00	**H1N059**
55200-70810	**H1N011**
55200-70811	**H1N011**
55200-70812	**H1N011**
55200-70AA0	**H1N011**
55200-77E00	**H1N001**
55200-81870	**H1N058**
55200-81A10	**H1N011**
55200-81A31	**H1N011**
55200-85810	**SN535P**
55200-86810	**SN535P**
55200-86820	**SN535P**
55200-86830	**SN535P**
55210-50E00	**H1N005**
55210-50E20	**H1N005**
55210-50E60	**SN627**

Genuine No.	ADVICS No.
55210-50E70	**SN627**
55210-50Z00	**B1N077**
55210-50Z10	**B1N077**
55210-60B50	**SN652P**
55210-60B80	**SN535P**
55210-62850	**SN652P**
55210-62B50	**SN652P**
55210-62G60	**H1N016**
55210-65J00	**H1N040**
55210-65J01	**H1N040**
55210-65J20	**H1N040**
55210-65JA0	**H1N040**
55210-70B00	**H1N005**
55210-70B10	**H1N005**
55210-70B60	**SN627**
55210-70B61	**SN627**
55210-70B70	**SN627**
55210-86030	**SN535P**
55220-60B80	**SN535P**
55220-86030	**SN535P**
55230-60B80	**SN535P**
55230-86030	**SN535P**
55250-60B30	**SN535P**
55250-60B80	**SN535P**
55250-64800	**SN760P**
55250-64B00	**SN760P**
55250-64B01	**SN760P**
55250-64B10	**SN760P**
55250-64B20	**SN760P**
55250-70C10	**SN535P**
55250-70C12	**SN535P**
55251-60830	**SN535P**
55251-60B30	**SN535P**
55251-60B80	**SN535P**
55251-64B00	**SN760P**
55251-64B01	**SN760P**
55251-64B10	**SN760P**
55251-64B20	**SN760P**
55251-70C10	**SN535P**
55251-70C12	**SN535P**
55300-86810	**SN535P**
55300-86820	**SN535P**
55800-50G50	**SN535P**
55800-50G60	**SN535P**
55800-57L00	**C2N015**
55800-60G00	**SN652P**
55800-60G01	**SN652P**
55800-60G50	**H1N016**
55800-60J00	**SN913P**
55800-60J10	**SN913P**

Genuine No.	ADVICS No.
55800-61G00	**H1N016**
55800-61G50	**H1N016**
55800-61G60	**H1N016**
55800-61G70	**H1N016**
55800-61G71	**H1N016**
55800-61G72	**H1N016**
55800-61G73	**H1N016**
55800-61G74	**H1N016**
55800-62G00	**SN861**
55800-62G01	**SN861**
55800-62G11	**SN861**
55800-62G60	**H1N016**
55800-68L00	**H2N046**
55800-78G00	**C2N022**
55800-78G01	**C2N022**
55800-80J00	**C2N015**
55800-80J01	**C2N015**
55810-50E10	**SN649**
55810-50E11	**SN649**
55810-50Z01	**B2N064**
55810-50Z02	**B2N095**
55810-54G00	**SN684P**
55810-54G10	**SN684P**
55810-54G11	**SN684P**
55810-54G30	**SN684P**
55810-54G40	**SN684P**
55810-57K00	**H1N025**
55810-57L00	**B1N094**
55810-58J00	**SN935**
55810-60F00	**H1N005**
55810-60F01	**H1N005**
55810-60F02	**H1N005**
55810-60F03	**H1N005**
55810-60F10	**H1N005**
55810-60FA0	**H1N008**
55810-60FA1	**H1N008**
55810-60FA2	**H1N008**
55810-60FA3	**H1N008**
55810-60J10	**G1N006**
55810-61F00	**H1N014**
55810-61F01	**H1N014**
55810-61F02	**H1N014**
55810-61F10	**H1N014**
55810-61F20	**H1N014**
55810-68H00	**SN946**
55810-72J00	**SN935**
55810-72J10	**SN935**
55810-72J20	**H1N052**
55810-74G00	**H1N009**
55810-74G01	**H1N009**

Genuine No.	ADVICS No.
55810-74G03	**H1N009**
55810-75F00	**H1N020**
55810-75F10	**H1N020**
55810-75F11	**H1N020**
55810-75F12	**H1N020**
55810-75F32	**H1N020**
55810-76A00	**G1N006**
55810-76A01	**G1N006**
55810-76A02	**G1N006**
55810-76A11	**G1N006**
55810-76G00	**H1N009**
55810-76G01	**H1N009**
55810-76G02	**H1N009**
55810-76G03	**H1N009**
55810-76G90	**H1N009**
55810-76G92	**SN935**
55810-78A00	**SN674**
55810-78A01	**SN674**
55810-78A02	**SN674**
55810-78A03	**SN674**
55810-80F00	**SN649**
55810-80G00	**G1N006**
55810-80G01	**G1N006**
55810-80G02	**G1N006**
55810-80G04	**G1N006**
55810-80G05	**G1N006**
55810-80G11	**G1N006**
55810-80G12	**G1N006**
55810-80G13	**G1N006**
55810-80J00	**H1N041**
55810-80J01	**H1N041**
55810-81400	**H1N014**
55810-81401	**H1N014**
55810-82K00	**SN935**
55810-82M00	**H1N053**

Genuine No.	ADVICS No.
5-86000975	**C2N015**
5-86001057	**SN418P**
5-86005148	**C2N022**
5-86005149	**C2N022**
5-86005260	**C1N016**
5-86005261	**C1N016**
5-86005262	**C1N020**
5-86005263	**C1N020**
5-86005264	**C1N020**
5-86009163	**C2N022**
5-86009207	**C1N016**
5-86009208	**C1N020**
5-86009209	**C1N020**
5-86009575	**C2N022**
5-86009576	**C1N020**
5-86011847	**C2N015**
5-86011848	**C1N018**
5-86011849	**SN430P**
5-86012604	**C2N015**
5-86012654	**SN430P**
5-86012655	**C1N018**
5-86014123	**C1N016**
5-86014124	**C1N020**
5-86014125	**C1N020**
5-86014313	**C2N015**
5-86014314	**C1N018**
5-86014394	**SN418P**
5-86014456	**C1N016**
5-86014813	**C2N015**
5-86014833	**SN430P**
5-86014834	**C1N016**
5-86014835	**C1N020**
5-86014836	**C1N018**
5-86015191	**C1N020**
5-86015195	**C2N015**
5-86017797	**C2N022**
5-86017798	**C2N022**
5-86019520	**C2N022**
5-86019530	**SN418P**
5-86106233	**B1N003**
5-86106234	**B1N011**
5-86106235	**B1N004**
5-86106236	**B1N010**
5-86106237	**SN574**
5-86106238	**B1N011**
5-86106239	**B1N010**
5-86106485	**B1N004**
5-86116483	**B1N010**
5-86116484	**B1N011**
5-86116485	**B1N004**

Genuine No.	ADVICS No.
5-86116486	**B1N031**
5-86118655	**B1N062**
5-86121291	**B1N062**
5-86122257	**B1N062**
5-86122492	**B1N062**
5-86122883	**B1N062**
5-86122884	**B1N062**
5-86122917	**B1N010**
5-86122918	**B1N011**
5-86122919	**B1N062**
5-86122926	**B1N031**
5-86122927	**SN574**
5-86122928	**B1N011**
5-86122929	**SN574**
5-86124984	**B1N062**
5-86124985	**B1N031**
5-86129072	**B1N235**
5-86133054	**B1N011**
5-86133210	**B1N004**
5-86133418	**B1N004**
5-86133506	**B1N011**
5-86133648	**B1N011**
5-86134702	**B1N011**
5-86137366	**B1N062**
5-86142232	**B1N235**
5-86202984	**C2N021**
5-86203043	**C1N018**
5-86205637	**C1N018**
5-86206315	**C1N018**
5-86207073	**C2N021**
5-86207098	**C1N018**
5-86207204	**C2N021**
5-86207205	**C1N018**
5-86207370	**C1N018**
5-86207379	**C1N018**
5-88011489	**C1N018**
8-64242494	**SN230**
8-64470482	**SN241**
8-91171400	**SN535P**
8-91171828	**SN535P**
8-91172694	**H1N059**
8-91172912	**H1N058**
8-91173465	**H1N058**
8-91173482	**SN535P**
8-91174817	**H1N059**
8-94130145	**SN230**
8-94133681	**SN241**
8-94133685	**SN241**
8-94137937	**SN230**
8-94156703	**SN230**

Genuine No.	ADVICS No.
8-94169620	**SN230**
8-94242494	**SN230**
8-94335787	**J1N010**
8-94337740	**SN230**
8-94337741	**SN230**
8-94337742	**SN230**
8-94337743	**SN230**
8-94362041	**SN241**
8-94362813	**SN838P**
8-94364367	**J1N010**
8-94365981	**SN271**
8-94376280	**SN241**
8-94388198	**J1N010**
8-94442686	**SN241**
8-94449206	**SN241**
8-94449773	**SN241**
8-94461155	**J1N010**
8-94470482	**SN241**
8-94470598	**SN230**
8-94470599	**SN230**
8-94479583	**SN858P**
8-94483220	**J1N010**
8-97011892	**SN271**
8-97012880	**J1N010**
8-97013831	**SN271**
8-97029980	**SN841P**
8-97035257	**J1N008**
8-97035266	**J2N009**
8-97039269	**J2N009**
8-97045284	**SN271**
8-97047526	**J1N008**
8-97049429	**J1N010**
8-97049710	**SN858P**
8-97069838	**SN271**
8-97070079	**J1N008**
8-97070080	**J2N009**
8-97078409	**SN836P**
8-97078457	**SN230**
8-97078458	**SN230**
8-97079638	**J1N010**
8-97080398	**SN858P**
8-97081668	**SN841P**
8-97082920	**SN841P**
8-97094710	**SN858P**
8-97105703	**SN858P**
8-97113888	**J1N008**
8-97114300	**J1N010**
8-97128528	**A1N021**
8-97131748	**SN886P**
8-97131749	**J2N016**

Genuine No.	ADVICS No.
8-97144330	**J1N010**
8-97164183	**J1N010**
8-97167632	**SN858P**
8-97168633	**J1N018**
8-97168634	**SN904**
8-97172427	**SN888**
8-97175530	**J2N009**
8-97175531	**J1N008**
8-97180525	**J1N008**
8-97191014	**J1N008**
8-97191015	**J2N009**
8-97203209	**SN682P**
8-97206862	**J1N010**
8-97206864	**J1N008**
8-97206865	**J1N010**
8-97206866	**J1N008**
8-97206868	**SN886P**
8-97206869	**J1N008**
8-97206870	**J2N009**
8-97206872	**J2N016**
8-97206873	**J2N009**
8-97217816	**J2N009**
8-97217986	**SN858P**
8-97217987	**SN858P**
8-97224872	**SN241**
8-97226101	**SN841P**
8-97226103	**SN836P**
8-97228208	**SN858P**
8-97230778	**J1N010**
8-97312716	**SN836P**
8-97318893	**SN841P**
8-97318894	**SN836P**
8-97321102	**J1N018**
8-97329264	**SN836P**
8-97329265	**SN836P**
8-97329266	**J1N018**
8-97365911	**J1N018**
8-97367539	**SN932**
8-97368980	**SN836P**
8-97377522	**J1N018**
8-97378351	**SN932**
8-97378446	**SN904**
8-98091271	**SN932**

HINO

Genuine No.	ADVICS No.
04465-25020	**SN650**
04465-25080	**SN650**
04465-36010	**A1N061**
04465-36030	**A1N100**
04465-37010	**A1N060**
04465-37020	**A1N102**
04465-37030	**A1N060**
04465-37040	**A1N100**
04465-37060	**A1N102**
04465-37070	**J1N018**
04465-37090	**J1N018**
04465-37100	**A1N060**
04465-37150	**A1N060**
04465-37160	**A1N102**
04465-37220	**SN137**
04465-37230	**J1N018**
04465-37240	**A1N102**
04466-37100	**SN932**

[Caliper Piston] Cross Reference List / Genuine No. ⇒ ADVICS No.

Genuine No.	ADVICS No.	Make
47731-04030	**A9N033**	TOYOTA
47731-12030	**A9N018**	TOYOTA
47731-12130	**A9N054**	TOYOTA
47731-12150	**A9N057**	TOYOTA
47731-12170	**A9N058**	TOYOTA
47731-12A10	**A9N055**	TOYOTA
47731-12A70	**A9N052**	TOYOTA
47731-13010	**A9N022**	TOYOTA
47731-14110	**A9N006**	TOYOTA
47731-14120	**A9N007**	TOYOTA
47731-20190	**A9N051**	TOYOTA
47731-20230	**A9N002**	TOYOTA
47731-20250	**A9N020**	TOYOTA
47731-20260	**A9N056**	TOYOTA
47731-22010	**A9N024**	TOYOTA
47731-22040	**A9N027**	TOYOTA
47731-22050	**A9N029**	TOYOTA
47731-22060	**A9N028**	TOYOTA
47731-22070	**A9N036**	TOYOTA
47731-22080	**A9N035**	TOYOTA
47731-22090	**A9N041**	TOYOTA
47731-25010	**A9N045**	TOYOTA
47731-26030	**A9N049**	TOYOTA
47731-28090	**A9N086**	TOYOTA
47731-30020	**A9N004**	TOYOTA
47731-30050	**A9N023**	TOYOTA
47731-30060	**A9N040**	TOYOTA
47731-30110	**A9N064**	TOYOTA
47731-30120	**A9N061**	TOYOTA
47731-30130	**A9N031**	TOYOTA
47731-30170	**A9N079**	TOYOTA
47731-30190	**A9N066**	TOYOTA
47731-32020	**A9N050**	TOYOTA
47731-33040	**A9N062**	TOYOTA
47731-33070	**A9N065**	TOYOTA
47731-33090	**A9N078**	TOYOTA
47731-34010	**A9N026**	TOYOTA
47731-35010	**A9N005**	TOYOTA
47731-35020	**A9N025**	TOYOTA
47731-35040	**A9N016**	TOYOTA
47731-35050	**A9N003**	TOYOTA
47731-35070	**A9N044**	TOYOTA
47731-36010	**A9N046**	TOYOTA
47731-36020	**A9N047**	TOYOTA
47731-40010	**A9N048**	TOYOTA
47731-42010	**A9N030**	TOYOTA
47731-42020	**A9N019**	TOYOTA
47731-47010	**A9N080**	TOYOTA
47731-47060	**A9N089**	TOYOTA
47731-48010	**A9N063**	TOYOTA
47731-50060	**A9N008**	TOYOTA
47731-50070	**A9N010**	TOYOTA
47731-50200	**A9N012**	TOYOTA

Genuine No.	ADVICS No.	Make
47731-52010	**A9N059**	TOYOTA
47731-52020	**A9N021**	TOYOTA
47731-52190	**A9N087**	TOYOTA
47731-52210	**A9N088**	TOYOTA
47731-52280	**A9N084**	TOYOTA
47731-60010	**A9N015**	TOYOTA
47731-60020	**A9N053**	TOYOTA
47731-60030	**A9N009**	TOYOTA
47731-60040	**A9N011**	TOYOTA
47731-60070	**A9N032**	TOYOTA
47731-60280	**A9N039**	TOYOTA
47731-60300	**A9N042**	TOYOTA
47732-30010	**A9N001**	TOYOTA
47732-60010	**A9N014**	TOYOTA
47732-60020	**A9N017**	TOYOTA
47831-22220	**A9N082**	TOYOTA
47831-30300	**A9N081**	TOYOTA
47831-30310	**A9N083**	TOYOTA
47831-33210	**A9N085**	TOYOTA
47831-50140	**A9N013**	TOYOTA
47831-60080	**A9N034**	TOYOTA
41121-1LB0A	**B9N004**	NISSAN
41121-37J00	**B9N002**	NISSAN
41121-WK600	**B9N003**	NISSAN
45216-S2R-003	**C9N002**	HONDA
45216-SJA-003	**C9N001**	HONDA
MB134805	**D9N006**	MITSUBISHI
MB162286	**D9N008**	MITSUBISHI
MB193954	**D9N005**	MITSUBISHI
MB295545	**D9N002**	MITSUBISHI
MB857235	**D9N001**	MITSUBISHI
MC112112	**D9N004**	MITSUBISHI
MC112138	**D9N009**	MITSUBISHI
MC894440	**D9N003**	MITSUBISHI
MR307395	**D9N010**	MITSUBISHI
MR334903	**D9N011**	MITSUBISHI
MR407088	**D9N007**	MITSUBISHI
B25D-33-651	**E9N006**	MAZDA
F124-33-651	**E9N002**	MAZDA
FB05-33-651A	**E9N001**	MAZDA
LA01-33-651	**E9N005**	MAZDA
LA83-33-651	**E9N003**	MAZDA
MB699475	**E9N006**	MAZDA
S083-33-651	**E9N004**	MAZDA
47731-87501	**G9N001**	DAIHATSU
47731-B4010	**G9N002**	DAIHATSU
47731-B5010	**G9N003**	DAIHATSU
26216-KC000	**F9N001**	SUBARU
26235-KE000	**F9N002**	SUBARU

[Caliper Slide Pin] Cross Reference List / Genuine No. ⇒ ADVICS No.

Genuine No.	ADVICS No.	Make
47714-33361	**A3N012**	TOYOTA
47715-12A10	**A3N007**	TOYOTA
47715-22010	**A3N010**	TOYOTA
47715-22070	**A3N024**	TOYOTA
47715-22080	**A3N025**	TOYOTA
47715-22110	**A3N034**	TOYOTA
47715-22120	**A3N035**	TOYOTA
47715-22130	**A3N026**	TOYOTA
47715-30050	**A3N016**	TOYOTA
47715-30060	**A3N027**	TOYOTA
47715-30080	**A3N017**	TOYOTA
47715-32020	**A3N028**	TOYOTA
47715-32030	**A3N029**	TOYOTA
47715-32040	**A3N023**	TOYOTA
47715-33020	**A3N030**	TOYOTA
47715-33050	**A3N002**	TOYOTA
47715-33060	**A3N003**	TOYOTA
47715-33340	**A3N006**	TOYOTA
47715-43010	**A3N015**	TOYOTA
47715-43020	**A3N036**	TOYOTA
47715-47010	**A3N004**	TOYOTA
47715-50010	**A3N031**	TOYOTA
47715-50020	**A3N032**	TOYOTA
47715-50030	**A3N033**	TOYOTA
47715-52010	**A3N001**	TOYOTA
47715-52190	**A3N005**	TOYOTA
47715-60010	**A3N021**	TOYOTA
47715-60020	**A3N037**	TOYOTA
47715-87503	**G3N003**	TOYOTA
47715-87504	**G3N001**	TOYOTA
47715-97204	**G3N005**	TOYOTA
47715-97501	**G3N006**	TOYOTA
47715-B1030	**A3N005**	TOYOTA
47715-B1040	**A3N007**	TOYOTA
47715-B4010	**G3N002**	TOYOTA
47715-B4020	**G3N004**	TOYOTA
47814-30300	**A3N020**	TOYOTA
47814-33210	**A3N009**	TOYOTA
47814-33211	**A3N008**	TOYOTA
47814-33240	**A3N013**	TOYOTA
47814-47051	**A3N011**	TOYOTA
47814-78010	**A3N018**	TOYOTA
47815-30300	**A3N022**	TOYOTA
47815-33240	**A3N014**	TOYOTA
47815-78010	**A3N019**	TOYOTA
90015-AA603	**A3B001**	TOYOTA
90105-08164	**A3B002**	TOYOTA
90105-08304	**A3B003**	TOYOTA
90389-10053	**A3S002**	TOYOTA
90389-10054	**A3S001**	TOYOTA
41139-37J01	**B3N001**	NISSAN
41139-37J00	**B3N002**	MITSUBISHI
4605A500	**A3N015**	MITSUBISHI

Genuine No.	ADVICS No.	Make
4605B726	**A3N018**	MITSUBISHI
4605B727	**A3N019**	MITSUBISHI
4605B729	**A3B001**	MITSUBISHI
LA83-33-694	**B3N001**	MITSUBISHI
LA83-33-695	**B3N002**	MITSUBISHI
MB134808	**G3N001**	MITSUBISHI
MC894441	**B3N001**	MITSUBISHI
MC894442	**B3N002**	MITSUBISHI
MR307400	**D3N002**	MITSUBISHI
MR334902	**D3N001**	MITSUBISHI
MR407084	**A3N015**	MITSUBISHI
MR407085	**E3N001**	MITSUBISHI
MR569127	**G3N002**	MITSUBISHI
MR569128	**G3N004**	MITSUBISHI
8173-49-114	**G3N002**	MAZDA
8239-49-114	**G3N004**	MAZDA
B01C-33-694	**A3N010**	MAZDA
B25D-33-698	**A3B003**	MAZDA
GHP9-33-694	**A3N005**	MAZDA
GHP9-33-998	**A3N006**	MAZDA
GV7D-33-698	**A3B002**	MAZDA
S083-33-694	**A3N010**	MAZDA
S49K-33-694	**E3N001**	MAZDA
47714-B5010	**A3N013**	DAIHATSU
47715-B5010	**A3N014**	DAIHATSU
90041-05443	**A3B002**	DAIHATSU
55191-50J00	**D3N001**	SUZUKI
55206-77E00	**G3N001**	SUZUKI
55207-77E00	**G3N003**	SUZUKI

Published on May 31, 2020

Edited and Published by
ADVICS CO., LTD
Sales & Marketing Planning Dept.
2-1, Showa-cho, Kariya, Aichi,
448-8688, JAPAN

Printed in Japan

Meet the AISIN Family

Offering a wide selection of quality products.

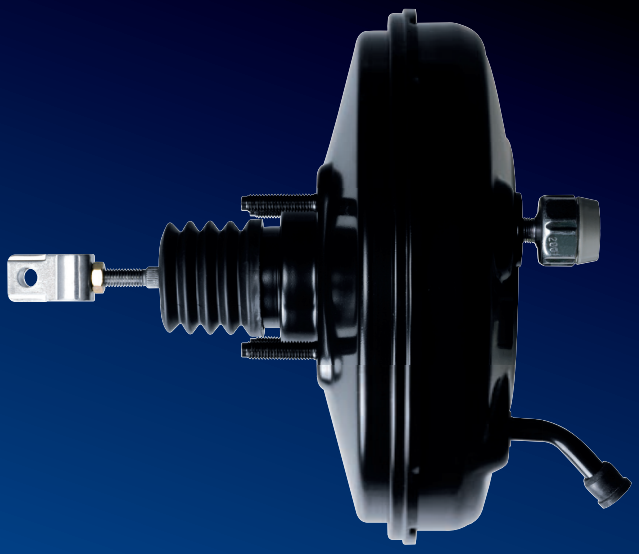

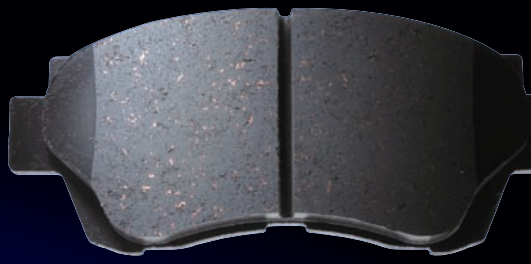

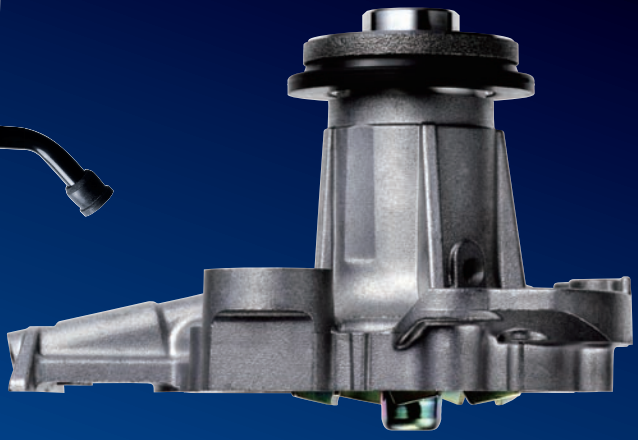

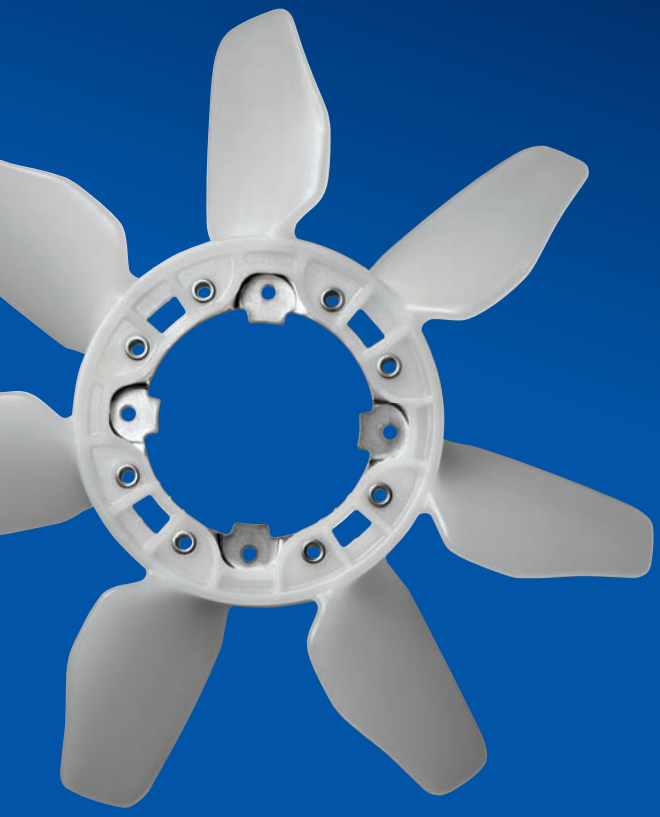

AISIN

One Team, Best Future

AISIN ADVICS

For Safety Evolution

ADVICS CO.,LTD.

AICHI,JAPAN www.advics.co.jp

ADSPAD200531